Aug. 21, 1923. 1,465,902

LE ROY E. GOULD

DISPENSER

Filed July 19, 1922 2 Sheets-Sheet 1

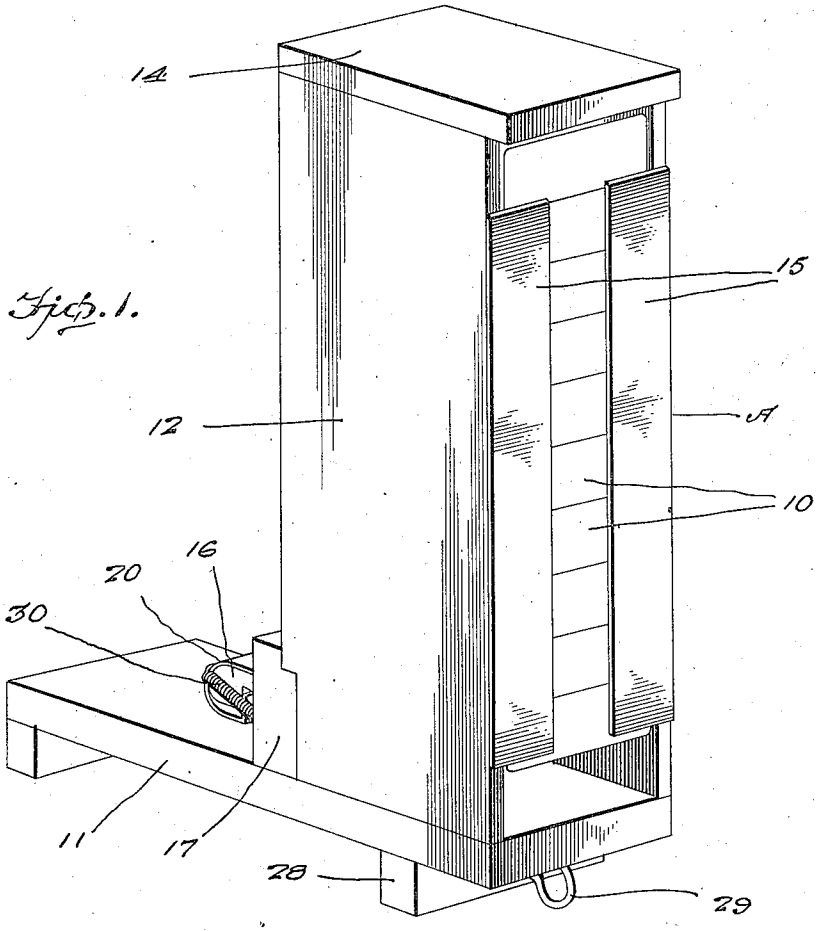

Fig. 1.

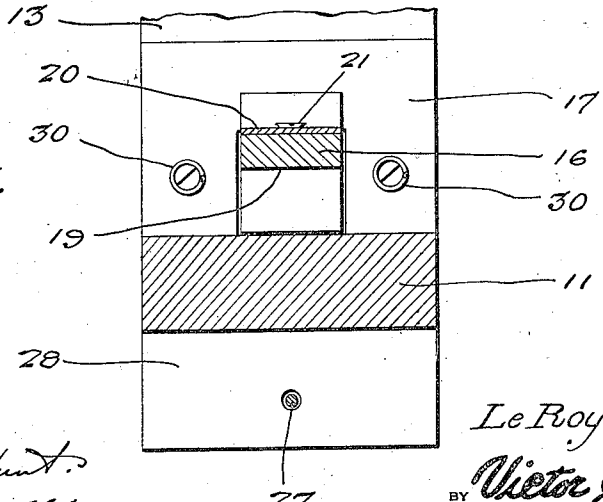

Fig. 5.

Le Roy E. Gould
INVENTOR

BY Victor J. Evans
ATTORNEY

Paul M. Hunt.
E. Yeager
WITNESS:

Aug. 21, 1923. 1,465,902

LE ROY E. GOULD

DISPENSER

Filed July 19, 1922 2 Sheets-Sheet 2

Fig. 2.

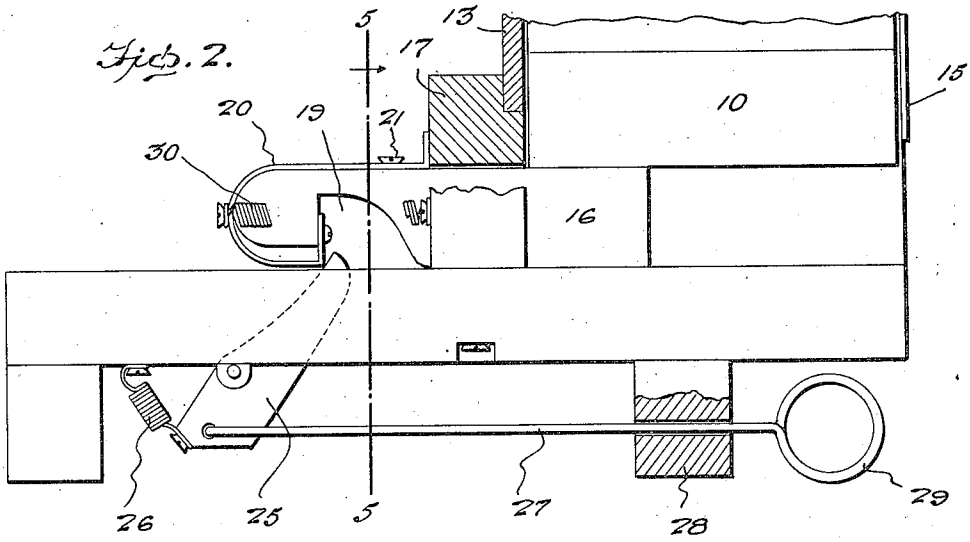

Fig. 3.

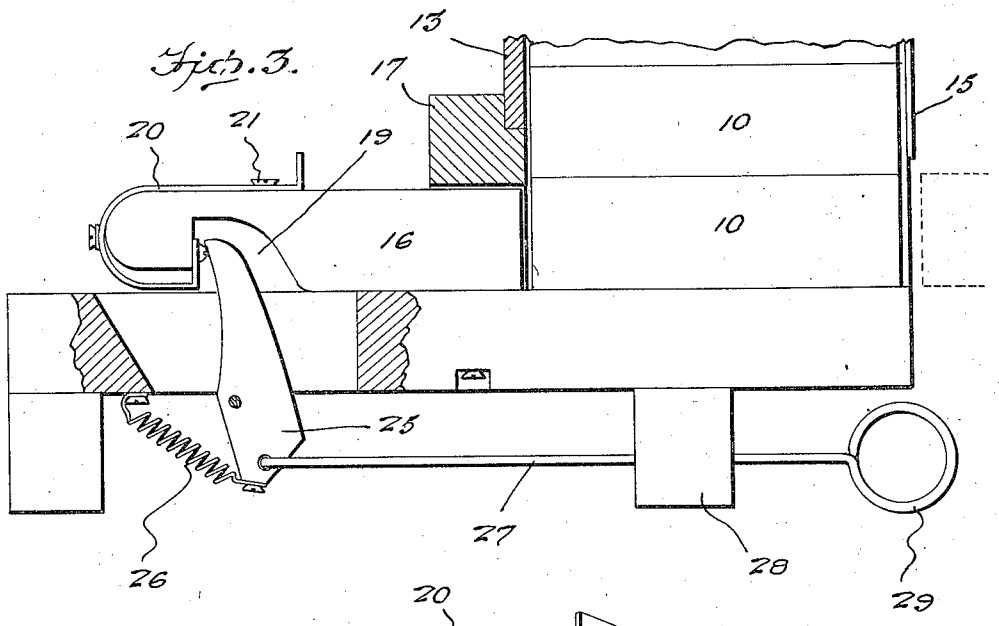

Fig. 4.

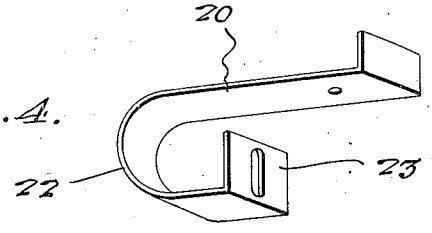

Paul M. Hunt.
E. Yeager
WITNESS:

Le Roy E. Gould
INVENTOR
BY Victor J. Evans
ATTORNEY

Patented Aug. 21, 1923. 1,465,902

UNITED STATES PATENT OFFICE.

LE ROY EDGAR GOULD, OF SHERMAN, SOUTH DAKOTA.

DISPENSER.

Application filed July 19, 1922. Serial No. 576,131.

To all whom it may concern:

Be it known that I, LE ROY E. GOULD, a citizen of the United States, residing at Sherman, in the county of Minnehaha and State of South Dakota, have invented new and useful Improvements in Dispensers, of which the following is a specification.

This invention comprehends the provision of a vending machine, and while primarily designed for vending packages of cigarettes or the like, its general application is contemplated by the claims.

The invention embodies amongst other features, a cabinet or casing in which the said packages are supported in a column, and singly ejected from said cabinet or casing, the gist of the invention residing in the novel construction of the ejecting means.

The nature and advantages of the invention will be better understood when the following detailed description is read in connection with the accompanying drawings, the invention residing in the construction, combination, and arrangement of parts as claimed.

In the drawings forming part of this application, like numerals of reference indicate similar parts in the several views, and wherein:—

Figure 1 is a perspective view of the machine forming the subject matter of the present invention.

Figure 2 is a side elevation, partly in section, showing the normal position of the parts.

Figure 3 is a fragmentary view, showing the active position of the slide and its cooperating parts of the ejecting mechanism.

Figure 4 is a perspective view of the resilient hook-like element.

Figure 5 is a sectional view taken on line 5—5 of Figure 2.

Referring to the drawings in detail, A indicates generally a cabinet which is adapted to contain the packages 10 of the merchandise to be vended, and it will be noted that these packages are arranged one above the other, so that they can be singly ejected from the cabniet in a manner to be hereinafter described. The cabinet embodies a base 11 from which rises the side walls 12, the latter being connected by a rear wall 13. The cabinet is provided with a removable cover 14, it being understood that the cabinet is filled from the upper end thereof. Supported by the front of the cabinet are spaced parallel members 15, these being in the nature of elongated strips which permit the contents of the cabinet to be viewed, the strips terminating in spaced relation to the base 11 to provide an exit opening through which the merchandise is ejected from the machine. It will be noted that the base 10 extends an appreciable distance beyond the rear wall 13 to provide a support for the slide 16, which is utilized to support the packages 10 and also to eject these packages singly from the cabinet. Reposing upon the base 11 in juxtaposition to the wall 13 is a transverse strip 17, which is provided with a slot through which the slide 16 operates. This slide 16 is cut away on the underside thereof as at 19 to permit of a slight vertical movement of the resilient hook-like element which is associated with the slide in the manner illustrated. This element is clearly shown in Figure 4, and indicated generally at 20. The body portion of the element reposes upon the slide and is secured thereto by means of a fastening element 21, the hook terminal 22 of the element being curved around the rearward end of the slide, and terminating to provide a vertically disposed portion 23 designed to move within the cut away portion 19 of the slide.

Pivoted on the underside of the base 11 is a lever 25 which has its upper end normally contacting the vertical disposed portion of the resilient hook-like element above described, and the lever is maintained in this position through the instrumentality of a spring 26, one end of which is secured to the base, and the other end secured to the adjacent extremity of a lever 25. Also secured to the lower end of this lever 25 is one end of an operating rod 27, the latter being disposed beneath and parallel with the base 11, and operating through a strip 28 secured to the underside of the base 11. The rod terminates to provide a finger receiving loop 29, and this rod controls the operation of the ejecting mechanism.

Arranged at both sides of the slide 16, are extensile springs 30, which have corresponding extremities secured to the transverse strip 17, while the remaining extremities of said springs are secured to the slide 16. The slide is retracted against the tension of these springs to allow one of the packages 10 to fall upon the base 11, the springs subse-

quently operating to move the slide across the base in order to eject said package from the cabinet.

The operation of the machine is as follows:—

As above stated, the parts are normally arranged in the manner illustrated in Figure 2, and when it is desired to obtain a package 10, the rod 27 is pulled forwardly, thereby moving the lever 25 upon its pivot in a direction to force the slide 16 rearwardly through the strip 17, to one side of the column of packages 10, thereby allowing the packages to fall upon the base 11. Incident to this movement of the slide 16, the springs 30 are placed under tension, and when the rod 27 is moved the limit in the direction just mentioned, the upper end of the lever 25 passes beyond the vertical portion 23 of the hook-like element, thereby releasing the slide 16, whereupon the latter is forcibly moved across the base 11 through the cabinet to eject the lowermost package 10 as will be readily understood. This position of the parts is shown in Figure 3, wherein the spring 26 is also placed under tension.

When the rod 27 is released, the spring 26 functions to return the rod and lever 25 to normal position, while the rebound of the springs 30 returns the slide to its normal position. As the lever 25 returns to its normal position, it contacts the hook-like portion of the resilient element 21, but as this portion is allowed a slight vertical movement within the cut away portion 19 of the slide, it is permitted to pass the hook without binding until it occupies the position shown in Figure 2. The machine is very simple in construction, and can be manufactured and sold at a nominal cost.

While it is believed that from the foregoing description, the nature and advantages of the invention will be readily apparent, I desire to have it understood that I do not limit myself to what is herein shown and described, and that such changes may be resorted to when desired as fall within the scope of what is claimed.

What I claim is:—

1. A vending machine of the character described comprising a cabinet including a base, said cabinet having an outlet opening, a slide operating on said base and through the cabinet, resilient elements associated with said slide, a resilient hook-like element supported by said slide and arranged to permit of slight vertical movement of the bill thereof, a lever pivoted on the base and normally engaging the bill of said hook, an operating rod connected with the lever and actuating the latter upon movement of the rod in one direction to retract said slide against the tension of said yieldable elements, said elements operating to actuate the slide through the cabinet when released from said lever, resilient means for normally returning the lever and said rod to normal position, and the bill of said hook yielding to permit the machine to pass said hook on its return movement.

2. A vending machine of the character described comprising a cabinet including a base and having an outlet opening, a slide arranged to operate on the base, yieldable means associated with the slide, means for retracting the slide against the tension of said yieldable means and including a pivoted lever, said slide having a shoulder against which said lever operates, a resilient hook like element associated with said slide and including a portion arranged parallel with said shoulder, a headed element projecting from said shoulder, and said portion of the element having a slot receiving said element, and permitting the hook to yield as it passes over the lever in one direction.

In testimony whereof I affix my signature.

LE ROY EDGAR GOULD.