(12) UK Patent Application (19) GB (11) 2 129 310 A

(21) Application No **8329120**
(22) Date of filing **1 Nov 1983**
(30) Priority data
(31) **438000**
(32) **1 Nov 1982**
(33) **United States of America (US)**
(43) Application published **16 May 1984**
(51) **INT CL³ A63B 69/36**
(52) Domestic classification **A6D** 13B
(56) Documents cited
GB 1408424
GB 0934599
GB 0389131
(58) Field of search **A6D**
(71) Applicant
Bernard Strong, 4964 Calvin Ave, Tarzana, California 91356, United States of America
(72) Inventor
Bernard Strong
(74) Agent and/or Address for Service
Mathys & Squire, 10 Fleet Street, London EC4Y 1AY

(54) Golf ball practice apparatus

(57) A golf ball practice apparatus comprising a teeing means for successively placing golf balls on a golf tee 3 together with means for rapidly dissipating the kinetic energy stored within said golf balls after they have been struck with a golf club. The latter means comprises a frame 11A, 11B, 11C, holding a flexible net 13 and damping means, eg rings 14, 15 slidable on the frame and attached to the net so that a ball arrested by the net is gently deposited in a collecting means 20 leading to a connecting conduit 21 wherein it will roll by gravity and come to rest at a point adjacent to a golf tee. On depressing a foot operated pedal 10 the user causes one golf ball to be rapidly accelerated from its rest position along an upwardly inclined delivery arm 7 so as to place it on the golf tee 3. Provision is made for storing a plurality of balls within the connecting conduit and the accelerating means also functions as an escapement device so that only one golf ball can be delivered at a time. After a golf ball has been delivered to and placed on the golf tee the delivery arm retracts as the user releases the foot operated pedal.

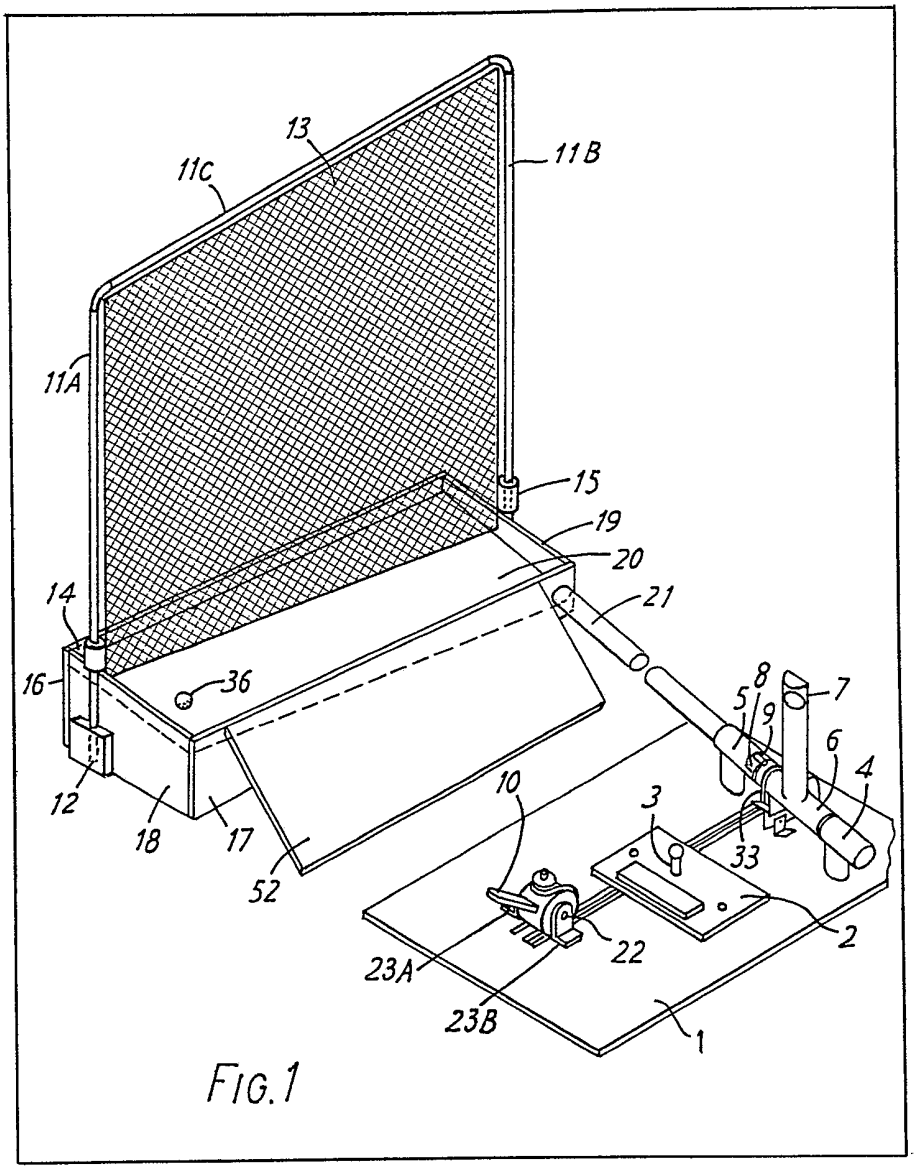

FIG. 1

GB 2 129 310 A

This print takes account of replacement documents later filed to enable the application to comply with the formal requirements of the Patents Rules 1982.

2129310

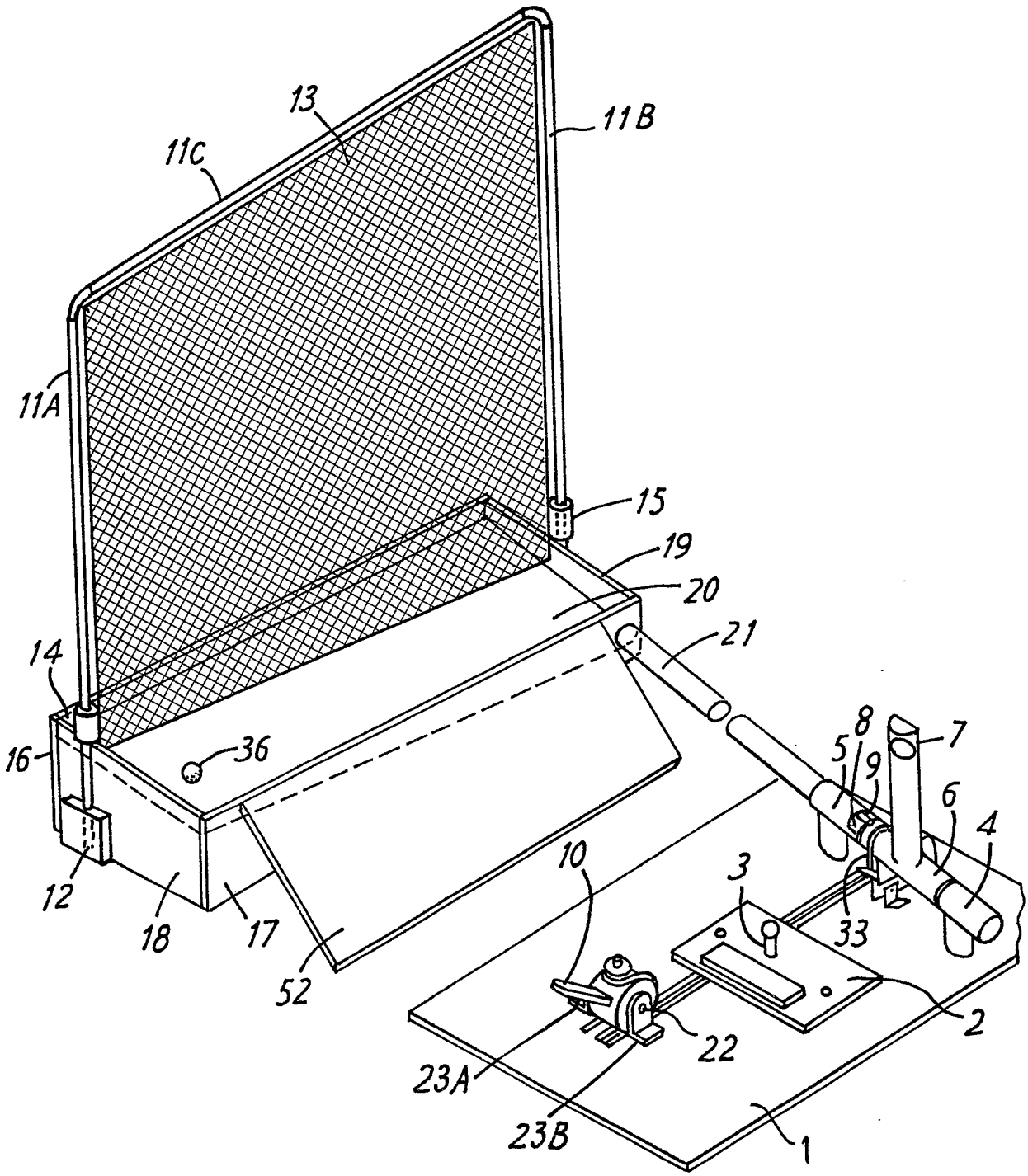

FIG. 1

2129310

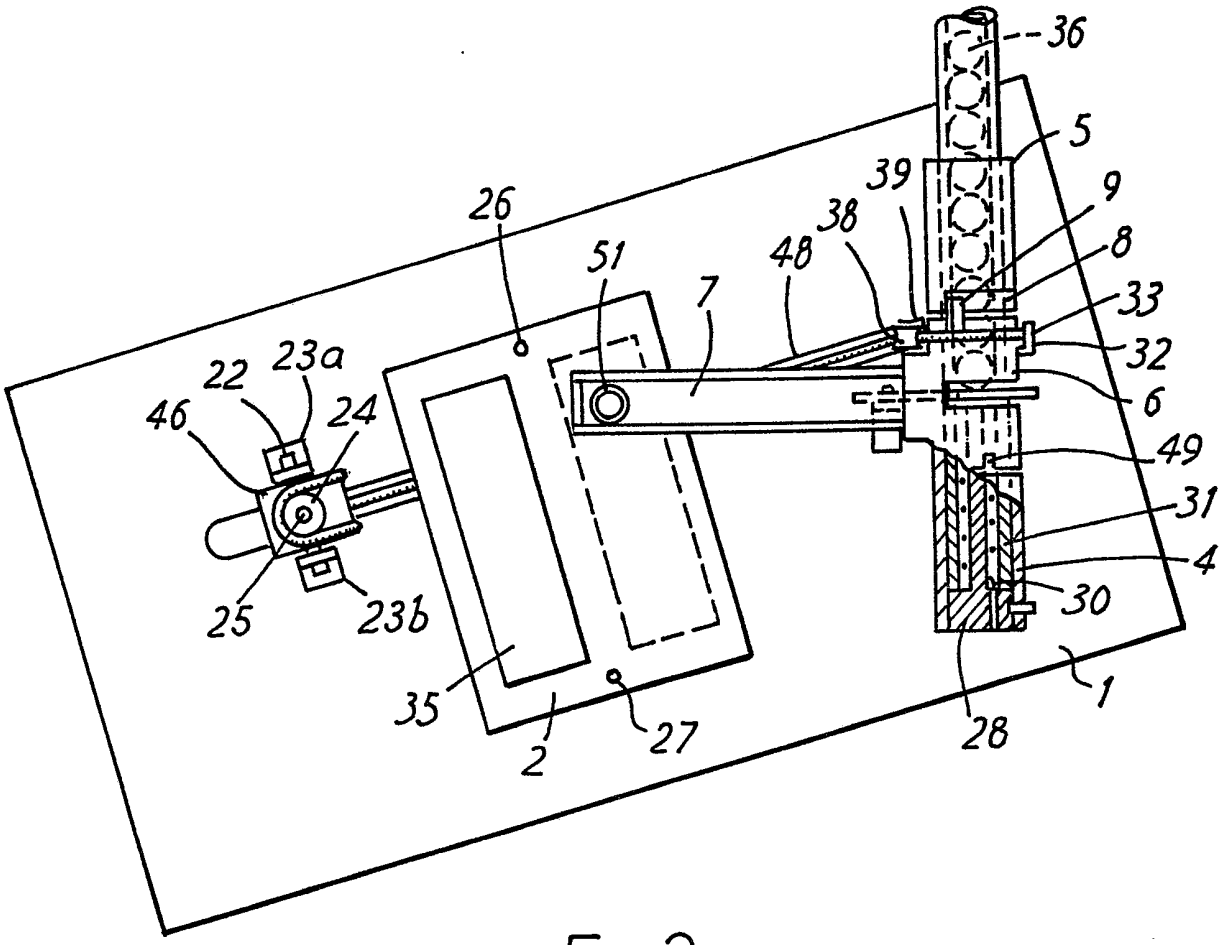

FIG.2

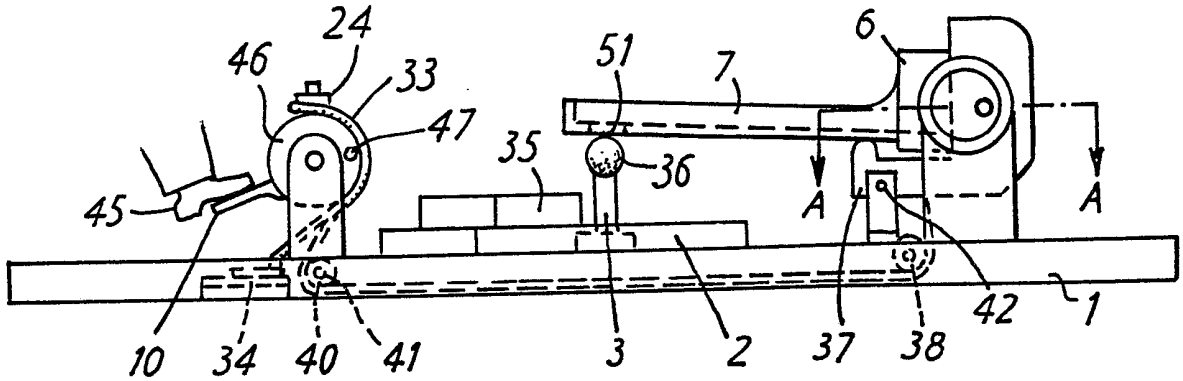

FIG.3

2129310

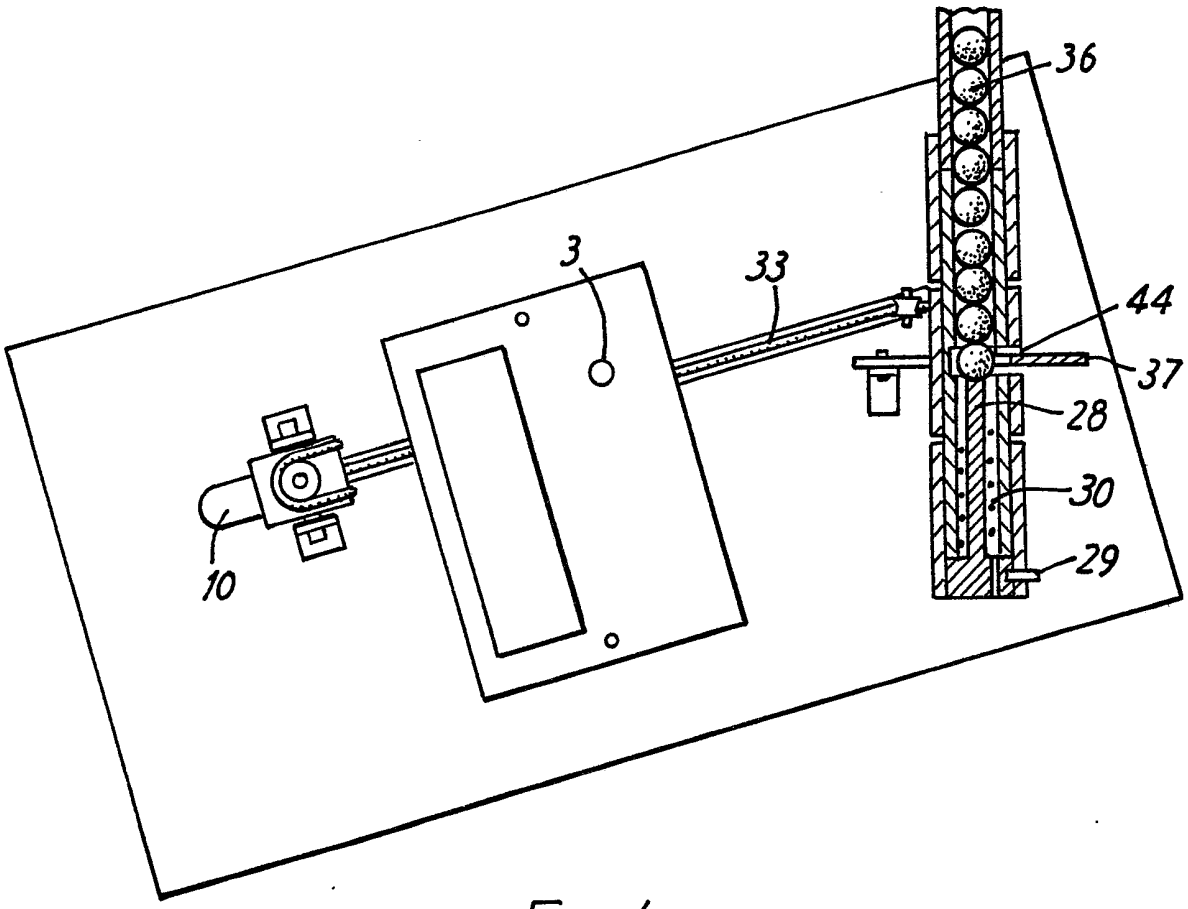

FIG.4

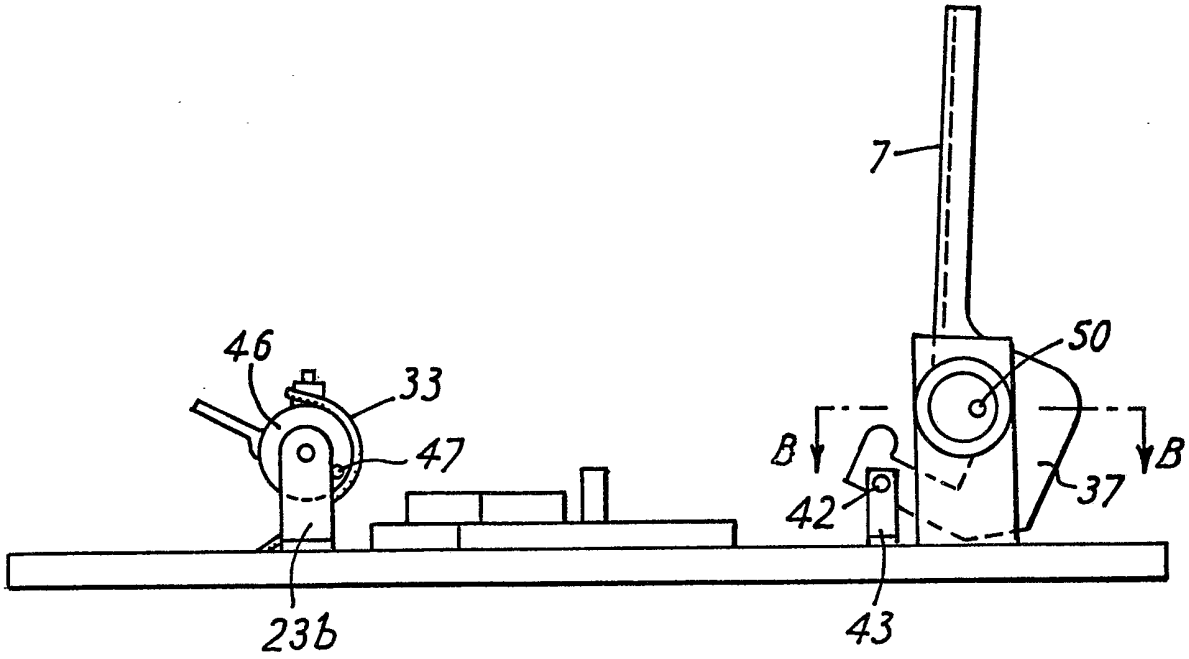

FIG.5

SPECIFICATION

Golf ball practice apparatus

This invention relates to golf ball practice driving ranges and particularly home driving ranges which take up a minimum of space and which operate without the need of any fans, blowers, cranks, gears, motors, switches or any power sources whatsoever other than the simple depression by the user of a conveniently placed foot operated pedal.

An object of the invention is to provide an improved apparatus requiring the minimum number of components all of which are of an extremely simple type so as to allow for the lowest possible construction cost. The apparatus is intended for above ground level installation so as to avoid any costly excavating for a normal installation but as will be obvious to anyone skilled in the art any part or parts of the apparatus could if so needed be installed below ground level without in any manner detracting from the merit of the invention.

A further object of the invention is to minimize the surface area required for installation and operation of the apparatus.

Summary of the Invention

The collecting device of the apparatus is located as close as practicable to the golf teeing means as may be achieved without impeding the user and as low as possible in order to allow for golf balls having a low trajectory to be readily deposited in the collecting device. In determining the lowest height of said collecting device allowance is made for the lower end of the bi-directionally inclined surface of the collecting device to be placed at a sufficient height to permit the near end of the connecting conduit with which it is contiguous, to be placed at a height which will provide a sufficiently inclined rolling surface within said connecting conduit when it is connected to the teeing means so that all golf balls deposited within the collecting device will roll freely by gravity into and along the connecting conduit and into the teeing means. The remote end of said connecting conduit is joined to a bearing sleeve into which all the golf balls will roll until they reach an arrested position which is lower than the height of the golf tee which said golf balls will eventually reach after they have been accelerated up and along a delivery arm which has an exit hole through which each ball will drop in succession onto the golf tee. By virtue of the accelerating means provided within the invention the connecting conduit may be made shorter than would otherwise be possible without said accelerating means thus effecting a space saving. An escapement mechanism is also provided to insure that only one golf ball is delivered for each operation of the foot operated pedal which operates the delivery arm.

After a golf ball has been struck by the user with a suitable golf club it is propelled towards the net and then rapidly and smoothly de-accelerated by the inventive kinetic energy absorbers provided, so that said golf ball drops into a collecting device which by virtue of said kinetic energy absorbers having minimized the reflected bounce of the golf ball off of the net, may be constructed with a very substantially smaller front to back dimension as measured in the general direction of the flight of said golf ball than would otherwise be required if said kinetic energy absorbers had not been employed.

The invention will now be described, by way of example, with reference to the accompanying drawings, in which:—

Fig. 1 is a perspective view of the complete apparatus according to the invention with the teeing means in the up position;

Fig. 2 is a plan view of the teeing means in the down position including a partial cutaway section along line A—A Fig. 3;

Fig. 3 is a side elevation of the teeing means in the down position;

Fig. 4 is a plan view of the teeing means in the up position including a partial section along line B—B Fig. 5; and

Fig. 5 is a side elevation of the teeing means in the up position.

All drawings and descriptions pertaining to same as detailed hereunder relate to and depict the apparatus as constructed for use by a right-handed golfer. For use by a left-handed golfer the appropriate portions of the various elements would be assembled in a reverse manner in order to avoid impeding such left-handed golfer.

A golf ball practice apparatus in which the inventive teeing means and kinetic energy absorbing means are employed is depicted in perspective Fig. 1. The apparatus includes a net 13 suspended from crossbar 11c which is supported by left-hand support 11a and right-hand support 11b. Kinetic energy absorbers 14 and 15 are respectively constrained about left-hand support 11a and right-hand support 11b on which they may freely reciprocate in the vertical plane. Collector rear 16, collector front 17, collector left-side 18 and collector face surface 20 are assembled as shown so that collector face surface slopes bi-directionally towards connecting conduit 21 with which it is contiguous. Clamping plate 12 securely affixes left-hand support 11a to collector left-side 18 and a similar clamping plate now shown affixes right-hand support 11b to collector right-side 19. Conduit 21 slopes downwards in the direction of the teeing means to which it conveys by gravity all golf balls entering said conduit after said golf balls have rolled down collector surface face 20. Ramp 52 provides an inclined plane leading from ground level to the top of collector front 17 so as to allow for any very low hit golf balls to roll up said ramp 52 and fall into the collecting means. The teeing means comprises a front support tee 5 outlet tee 6 and rear support tee 4 all of which are mounted on and connected by bearing sleeve 31 Fig. 2 about which outlet tee 6 and delivery arm 7 with which said outlet tee is contiguous are free to rotate within certain

defined limits relative to front support tee 5 and rear support tee 4 both of said support tees being securely mounted to platform 1 Fig. 1. The rotational movement of outlet tee 6 and thus delivery arm 7 is limited by stop bar 9 which is mounted on said outlet tee 6 in such manner that said stop bar moves within the confines of the adjacent stop slot 8 which is provided in front support tee 5 thus determining the exact up and down positions of delivery arm 7. Referring to Fig. 4 and Fig. 5 provision is made for spring loading outlet tee 6 and thus delivery arm 7 to an up position as depicted where said delivery arm is normally at rest but it will descend to a down position shown Fig. 2 and Fig. 3 when a tangential pulling force sufficient to overcome the tension of return spring 30 is applied to said outlet tee 6 by operating cord 33 such force being originated by the user exerting pressure on foot pedal 10 Fig. 3 which depicts said foot pedal in the down position with the foot of the user 45 pressing on said foot pedal 10 which is mounted on the periphery of drum 46 said drum mounted on drum pivot 22 Fig. 2 which is supported and retained by bracket left 23a and bracket right 23b. Operating cord 33 is secured at a first end to outlet tee 6 by cord anchor bracket 32 and then passes around a portion of said outlet tee 6 thence under pulley right-hand 38 said pulley being free to rotate around and supported by pivot right-hand 39 thence within cord slot 48 thence around pulley left-hand 40 Fig. 3 said pulley being free to rotate around and being supported by pivot left-hand 41 thence around a portion of the front peripheral edge of drum 46 thence around idler pulley 24 Fig. 2 said idler pulley being free to rotate around idler pulley pivot 25 mounted on drum 46 thence returning back around the rear peripheral edge of said drum thence passing into platform 1 Fig. 3 wherein the second second end of said operating cord 33 is secured by means of retaining plate 34 which clamps said operating cord 33 to platform 1. The teeing means portion of the apparatus includes all the components depicted in Fig. 2 through Fig. 5 and in Fig. 2 and Fig. 3 the teeing means is shown in the down position with a golf ball 36 which has just been delivered to the golf tee 3 and the foot of the user 45 still depressing foot pedal 10. When the said foot of the user is removed from foot pedal 10, drum 46 will be caused to rotate clockwise due to the tangential pulling force exerted on said drum by operating cord 33 being tensioned by return spring 30 Fig. 2 located within inner bearing sleeve 31 which is mounted at one end within rear support tee 4 and said drum 46 will continue to rotate through an angle of approximately 45 degrees and it will come to rest as shown in Fig. 5 at the point where drum stop pin 47 which is mounted to said drum 46 stops against drum bracket right 23b and the teeing means is then in the up position. Thus between the up and down positions, foot pedal 10 only rotates through an angle of approximately 45 degrees which is a maximum angle for easy operation of a foot pedal but said rotation in conjunction with the use of idler pulley 24 causes two lengths of operating cord 33 to be further wrapped around the periphery of drum 46 Fig. 2 one of said lengths around the front peripheral edge and the other said length around the rear peripheral edge which causes operating cord 33 to be pulled a sufficient distance to provide the approximately 90 degrees angular rotation which is required to outlet tee 6 and delivery arm 7 thus amplification of both angular movement and angular velocity is provided between foot pedal 10 and delivery arm 7. Referring to Fig. 5 the delivery arm is in the up position, accelerator cam 37 has dropped back and the next golf ball which will be delivered to golf tee 3 Fig. 4 has been arrested at a position adjacent to accelerator cam 37 by spring loaded end stop 28. One end of return spring 30 Fig. 4 engages in spring slot 49 Fig. 2 and the other end of said return spring is retained by spring hole 50 Fig. 5 so that on assembly of the teeing means, return spring 30 Fig. 2 is tensioned clockwise by rotating spring loaded end stop 28 sufficiently to cause delivery arm 7 to rise to the up position at which time anchoring dowel 29 is inserted through support tee 4 and thence into spring loaded end stop 28 thus preventing any further movement of said spring loaded end stop and maintaining the spring tension required on delivery arm 7. Operating cord 33 Fig. 2 and Fig. 3 is then attached as depicted so that said operating cord and also drum 46 are both maintained under tension of return spring 30.

Operation

A number of golf balls are dropped on to collector face surface 20 Fig. 1 which depicts one of such golf balls 36 that has just been dropped as described and said balls will then roll by gravity so as to occupy positions as shown Fig. 4 within conduit 21 and inner bearing sleeve 31. Referring to Fig. 5 the delivery arm is in the up position and accelerator cam 37 which is pivoted off center by cam pivot 42 supported by cam bracket 43, has fallen back by gravity so that it is positioned ready to strike and thus accelerate the next golf ball to be delivered to the golf tee 3 Fig. 4 said golf ball having been arrested in position adjacent to accelerator cam 37 by spring loaded end stop 28. The user then depresses foot pedal 10 Fig. 3 which causes drum 46 to rotate anti-clockwise to the down position shown thus exerting a pulling force on operating cord 33 which is thus caused to further wrap around both peripheral edges of said drum 46 so causing a tangential pulling force to be exerted on the periphery of outlet tee 6 Fig. 2 via pulley left-hand 40 Fig. 3 and pulley right-hand 38 so causing said outlet tee Fig. 2 to overcome the tension of return spring 30 and rotating said outlet tee rapidly anti-clockwise bringing it to rest as shown in the down position. In travelling to the down position outlet tee 6 causes delivery arm 7 which which it is contiguous to also move to said down position so placing exit hole 51 Fig. 2 which is provided in said delivery arm 7, immediately above and in line with golf tee 3 Fig. 3. As delivery

arm 7 approaches the end of the down movement the lower side of said delivery arm hits the smaller end of accelerator cam 37 which due to the velocity amplification provided between foot pedal 10 and delivery arm 7 which is yet further amplified by the off center pivoting of accelerator cam 37, moves very rapidly within accelerator slot 44 in order to smartly strike the golf ball that has already been positioned in front of said accelerator cam so that said golf ball is accelerated up and rolls along said delivery arm 7 which is then just reaching the end of the down movement. The delivery arm 7 has a closed end and when the golf ball reaches that end it drops by gravity through the adjacent exit hole 51 on to golf tee 3. In moving to strike the golf ball and thus to accelerate said golf ball, accelerator cam 37 at the same time moves into the position shown Fig. 2 and Fig. 3 thus acting as an escapement mechanism to insure that only one golf ball 36 is delivered to golf tee 3 for each cycle of delivery arm 7. When a golf ball has been delivered to golf tee 3 the foot 45 of the user is then removed from foot pedal 10 which then rotates clockwise to the up position Fig. 4 and Fig. 5 and delivery arm 7 moves to the up position to which it is restored by the tension of return spring 30.

The user then strikes the golf ball which is resting on golf tee 3 Fig. 1 with an appropriate golf club which propels said golf ball forward in the direction of net 13 which net when impacted by said ball will impact a rising motion to kinetic energy absorbers 14 and 15 which are attached to the lower end of said net 13 which by virtue of the freedom of its lower edge to move upward and also to a more limited extent rearward, tends to wrap around and evelope the golf ball thus even further enhancing the desired effect to gently arresting the golf ball so as to minimize its reflected bounce from the net. When the golf ball no longer moves in a forward direction the pressure on net 13 is abated and kinetic energy absorbers 14 and 15 will commence to fall by gravity and in so doing will gradually tend to unwrap the golf ball and restore said net to a normal vertical position causing the golf ball to fall by gravity onto collector face surface 20 whence it will roll by gravity into and within conduit 21 which is on a downward inclined plane towards the teeing means to which the golf ball is thus returned by gravity and the cycle may then repeat.

Rubber mat 2 Fig. 3 is provided with a suitable hole and recess for constraining and locating golf tee 3 and the apparatus is generally used in this configuration for practice with golf clubs often known as woods numbers 1, 2, 3 and 4 which are sometimes but not always used in conjunction with a golf tee in order to elevate the golf ball above the immediate ground level. Said rubber mat 2 is also provided with two mat locating dowels 26 and 27 Fig. 2 which permit said rubber mat to be lifted, rotated through 180 degrees and then replaced in the position shown dotted so the artificial grass chipping mat 35 which is firmly secured to said rubber mat 2 will then be positioned to receive the golf ball from delivery arm 7 instead of said golf balls being placed on golf tee 3 and the user may then practice as before but with the types of golf clubs known as irons in general and those known as short irons in particular which are ordinarily used without employing a golf tee.

Whereas the present invention has been shown and described herein in what is conceived to be the best mode contemplated, it is recognized that departures may be made therefrom within the scope of the invention which is therefore not to be limited to the details disclosed herein but is to be afforded the full scope of the invention.

CLAIMS

1. In an automatic golf club practice apparatus, the combination of a means for subsequently decelerating golf balls comprising:

framing means for holding a flexible net;

dampening means slidable said framing means and attached to said net for dissipating the kinetic energy stored within a moving golf ball so that the golf ball can be readily arrested and gently deposited in a suitable collecting means.

2. In an automatic golf club practice apparatus, the combination comprising:

Teeing means having a delivery arm with a first and second end;

Means for rotating said delivery arm about a bearing sleeve, said sleeve further comprising a mounting means for said delivery arm;

Means for biasing said delivery arm in a vertical position, said first end of said delivery arm being open to receive golf balls from said bearing sleeve;

An unbroken conduit for supplying golf balls to said bearing sleeve;

Said delivery arm having an upwardly inclined surface rising from said sleeve;

Said second end of said delivery arm closed and having a radial aperture through which a golf ball may fall by gravity unto a golf tee;

Means for rotating said delivery arm including an operating cord providing an angular and velocity amplified force to said sleeve for accelerating each golf ball from a resting position to said first end of said delivery arm so that it will be individually impelled along said upwardly inclined rolling surface; and

A foot operated pedal for actuating said operating cord.

3. In an automatic golf club practice apparatus as recited in claim 2, further comprising:

Means for decelerating golf balls after the balls have been struck with a golf club; and

Means for collecting the golf balls and returning them to said teeing means.

4. The apparatus of claim 1 further comprising a plurality of teeing means each housing its own delivery arm employed, said delivery arms and teeing means being adequately spaced apart so that a plurality of users may operate the apparatus at the same time in combination with a common decelerating and collection means.

5. The apparatus of claim 1 further comprising

means for cleaning each golf ball prior to being returned to said teeing means.

6. The apparatus of claim 1 further comprising means for a coin activated metering device which will only permit the apparatus to be activated a predetermined number of cycles for each coin inserted into said metering device.

7. The apparatus of claim 1 wherein said decelerating and collecting means may be employed with any type of automatic or manual teeing means.

8. The apparatus of claim 1 wherein said conduit has two sections, said first section leading from said collecting means to a central point and said second section leading from a storage hopper for golf balls located just above the teeing means, said second section of said conduit serving to connect said hopper to the teeing means.

9. The apparatus of claim 1 further comprising a resettable counter for allowing the golfer to determine how many golf balls were hit during any practice session.

10. An automatic golf club practice apparatus constructed, arranged and adapted to operate substantially as hereinbefore described with reference to, and as illustrated in, the accompanying drawings.

Printed for Her Majesty's Stationery Office by the Courier Press, Leamington Spa, 1984. Published by the Patent Office, 25 Southampton Buildings, London, WC2A 1AY, from which copies may be obtained.