N. H. HOLLAND.

PHONOGRAPH.

APPLICATION FILED MAR. 21, 1914.

1,155,572.

Patented Oct. 5, 1915.

Fig. 1.

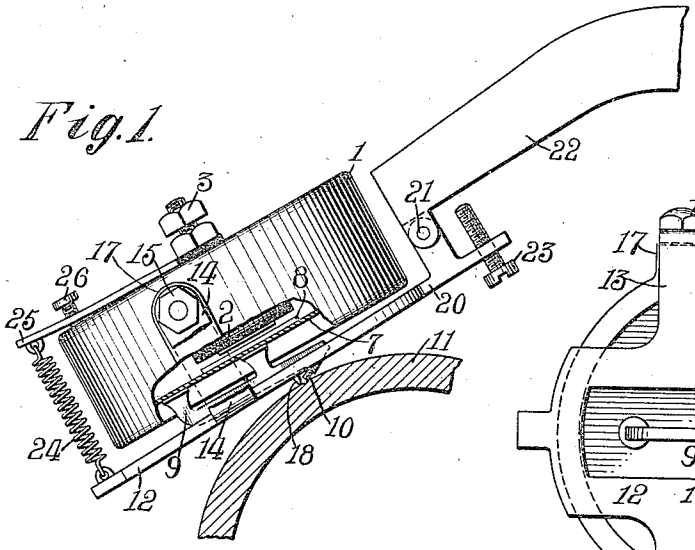

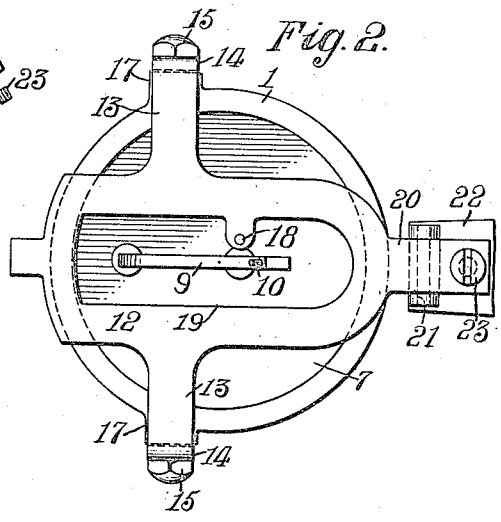

Fig. 2.

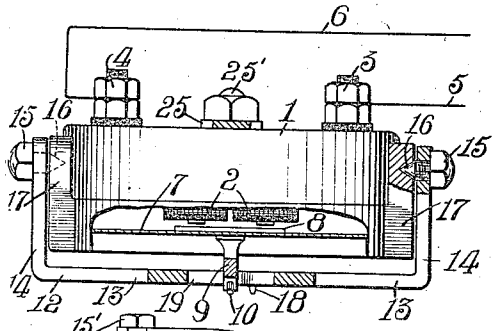

Fig. 3.

Fig. 4.

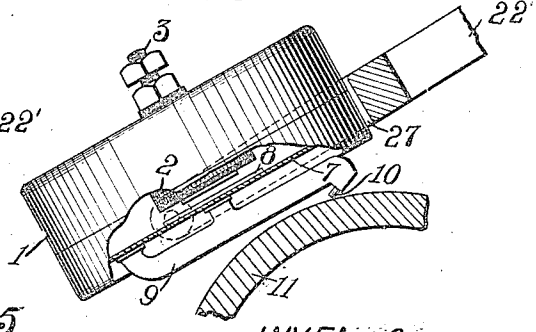

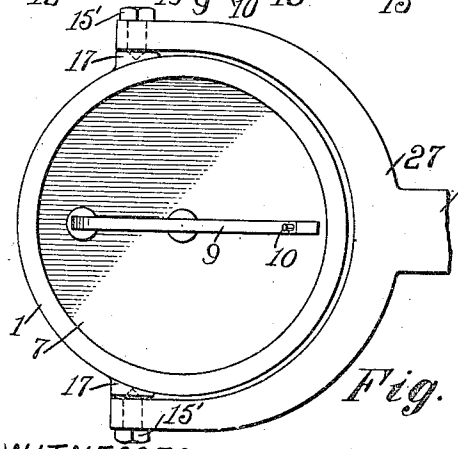

Fig. 5.

WITNESSES

J. A. Boopsby

Frederick Bachmann

INVENTOR

Newman H. Holland

BY Dyer & Holden

his ATTORNEYS

UNITED STATES PATENT OFFICE.

NEWMAN H. HOLLAND, OF WEST ORANGE, NEW JERSEY, ASSIGNOR TO NEW JERSEY PATENT COMPANY, OF WEST ORANGE, NEW JERSEY, A CORPORATION OF NEW JERSEY.

PHONOGRAPH.

1,155,572. Specification of Letters Patent. Patented Oct. 5, 1915.

Application filed March 21, 1914. Serial No. 826,138.

To all whom it may concern:

Be it known that I, NEWMAN H. HOLLAND, a subject of the King of Great Britain, and a resident of West Orange, Essex county, New Jersey, have invented certain new and useful Improvements in Phonographs, of which the following is a description.

My invention relates to phonographs and more particularly to an improved mounting for a phonographic sound box.

The principal object of the invention is to provide an improved mounting of such a character that the desired pressure of the usual sound box stylus upon the record is effected by the action of gravity upon the sound box itself, the latter being preferably mounted for up and down movement about a horizontal axis located eccentrically with respect to the same. In the preferred form of my invention, the sound box is carried by a support which tracks the phonographic record and serves to take a part of the weight of the sound box off the stylus.

The invention is primarily intended for use in connection with electro-magnetically operable phonographic recorders, but it is not limited to such use.

In order that my invention may be more clearly understood, attention is hereby directed to the accompanying drawings forming a part of this specification and in which—

Figure 1 is a view partly in side elevation and partly in section of one form of my invention applied to an electro-magnetically operable phonograph recorder; Fig. 2 is a bottom plain view of the same; Fig. 3 is a view of the same partly in front elevation and partly in section; Fig. 4 is a view partly in side elevation and partly in section of a modification; and Fig. 5 is a bottom plan view of the modification.

In all the views, like parts are designated by the same reference numerals.

The recorder shown comprises a cylindrical casing 1 provided with an electromagnet 2, the coils of which are electrically connected with binding posts 3 and 4 supported by but insulated from the casing 1. These binding posts are adapted to be connected respectively to the leads 5 and 6 of an electric circuit which may contain a suitable telephone transmitter and source of electric supply (not shown). The casing 1 is provided with and carries a vibratory diaphragm 7, the upper surface of which may have secured thereto a metallic plate 8 adapted to be attracted by the electromagnet 2 when the latter is energized. The diaphragm 7 also has secured thereto a stylus arm or lever 9 which carries a recording stylus 10 adapted to engage and operate upon a record cylinder 11. When electric undulations or impulses are impressed upon the circuit containing the leads 5 and 6, the diaphragm 7 and stylus 10 are set into vibration by the action of the magnet 2 upon the metallic plate 8. The specific construction described in this paragraph is well known and is not herein claimed *per se*.

The sound box hereinbefore described is supported by a cradle 12 provided with alined outwardly extending arms 13 which have outer upwardly extending end portions 14 carrying alined pivot screws 15, the latter being provided with conical ends 16 engaged in correspondingly shaped recesses in extensions 17 of the casing 1. The axes of the pivots 15 extend through the casing 1 parallel to the diaphragm 7 and are located a considerable distance to one side of the central axis and the center of gravity of the casing, so that the sound box has a tendency to move downwardly by gravity about the axes of the pivots 15 toward the record cylinder 11 and to force the stylus 10 against and a slight distance into the said cylinder. The cradle 12 is provided with a curved downwardly extending projection or "ball advance" 18 arranged to bear upon the cylinder 11 at a slight distance to one side of the stylus 10, the cradle 12 thereby serving to take a part of the weight of the sound box off the stylus 10. The cradle 12 is provided with an elongated central opening 19 through which the stylus arm 9 extends. An arm 20 extends from the cradle 12 at right angles to the arms 13 and is pivoted for up and down movement as at 21, to the support 22, which may be the usual traveling sound box carrier arm of a phonograph. A screw 23 adjustably mounted in the arm 20 at a point more remote from the sound box than the pivot 21 is arranged to bear on the under side of the support 22 to limit the downward movement of the cradle 12 and the sound box carried thereby. By pivoting the cradle 12 as at 21, the cradle and the sound box are permitted to move freely up and down during

the making of a record and are thereby free to remain in operative engagement with the cylinder 11 regardless of the eccentricity or similar irregularities in the said cylinder. The tendency of the sound box to move downwardly by gravity about the pivots 15 may be counterbalanced to a desired extent as by a tension spring 24 secured at one end to the forward end of the cradle 12, the said spring being secured at its other end to a flat elastic member 25 secured at its inner end in engagement with the top of the casing 1, as by bolt 25'. A headed screw 26 threaded through the member 25 bears upon the top of the casing 1 to permit adjustment of the member 25 for the purpose of varying the tension of the spring 24. For any given adjustment, the spring 24 exerts a substantially constant counterbalancing force, so that by a suitable adjustment of the screw 26, the unbalanced downward pressure of the sound box 1 on the stylus 10 may be regulated to a desired fixed amount.

In the modification shown in Figs. 4 and 5, the pivoted cradle support of the sound box is omitted, the sound box being supported from the forked extension 27 of the phonographic carrier arm 22'. The pivots 15' pass through the outer ends of the forked extension 27 and have their conical inner ends located in correspondingly shaped recesses in the extensions 17 of the casing 1. The location of the axes of the pivots 15' with respect to the sound box is the same as that of the pivots 15 shown in Figs. 1, 2 and 3.

It is understood that my invention is not limited to the specific forms described above, but that it includes in addition all the modifications falling within the scope of the appended claims.

Having now described my invention what I claim as new and desire to protect by Letters Patent of the United States is as follows:

1. In a device of the class described, the combination of means for tracking a sound record, and a sound box provided with a vibratory member and a stylus connected to said vibratory member, said sound box being pivotally supported by said tracking means for up and down movement about an axis located to one side of the center of gravity of said sound box, substantially as described.

2. In a device of the class described, the combination of means for tracking a sound record, a sound box provided with a vibratory member and a stylus connected to said vibratory member, said sound box being pivotally supported by said tracking means for up and down movement about an axis located to one side of the center of gravity of said sound box, and means tending to resist downward movement of said sound box with respect to said tracking means, substantially as described.

3. In a device of the class described, the combination of means for tracking a sound record, a sound box provided with a vibratory member and a stylus connected to said vibratory member, said sound box being pivoted to said tracking means for up and down movement about an axis located to one side of the center of gravity of said sound box, and adjustable means tending to resist downward movement of said sound box with respect to said tracking means, substantially as described.

4. In a device of the class described, the combination of record tracking means pivoted for movement about a given axis, and a sound box provided with a vibratory member and a stylus connected to said vibratory member, said sound box being pivoted to said tracking means for movement about an axis located to one side of the center of gravity of said sound box and substantially parallel to said first named axis, substantially as described.

5. In a device of the class described, the combination of record tracking means pivoted for movement about a given axis, a sound box provided with a vibratory member and a stylus connected to said vibratory member, said sound box being pivoted to said tracking means for movement about an axis located to one side of the center of gravity of said sound box and substantially parallel to said first named axis, and means for limiting the pivotal movement of said tracking means, substantially as described.

6. In a device of the class described, the combination of means for tracking a sound record, a sound box provided with a vibratory member and a stylus connected to said vibratory member, said sound box being pivoted to said tracking means for up and down movement about an axis located to one side of the center of gravity of said sound box, and resilient means tending to resist downward movement of said sound box with respect to said tracking means, substantially as described.

7. In a device of the class described, the combination of means for tracking a sound record, a sound box provided with a vibratory member and a stylus connected to said vibratory member, said sound box being pivotally supported by said tracking means for up and down movement about an axis located to one side of the center of gravity of said sound box, and means exerting a substantially constant force to resist downward movement of said sound box with respect to said tracking means, substantially as described.

8. In a device of the class described, the combination of record tracking means pivot-

ed for movement about a substantially horizontal axis, and a sound box provided with a vibratory member and a stylus connected to such vibratory member, said sound box being supported by said tracking means for up and down movement with respect to said means, substantially as described.

9. In a device of the class described, the combination of record tracking means pivoted for movement about a substantially horizontal axis, a sound box provided with a vibratory member and a stylus connected to said vibratory member, said sound box being supported by said tracking means for up and down movement with respect to said means, and means exerting a substantially constant force to resist downward movement of said sound box with respect to said tracking means, substantially as described.

This specification signed and witnessed this 20th day of March, 1914.

NEWMAN H. HOLLAND.

Witnesses:
FREDERICK BACHMANN,
MARY J. LAIDLAW.

Copies of this patent may be obtained for five cents each, by addressing the "Commissioner of Patents, Washington, D. C."