Nov. 27, 1934. W. MEDOFF 1,982,616

PACKAGE

Filed Nov. 10, 1931

Fig. 1,

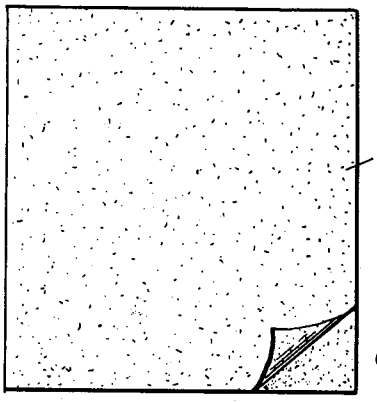

Fig. 2,

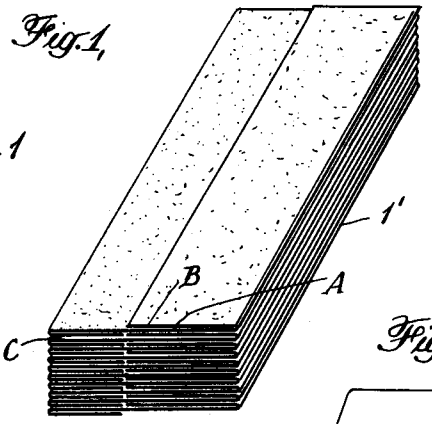

Fig. 3,

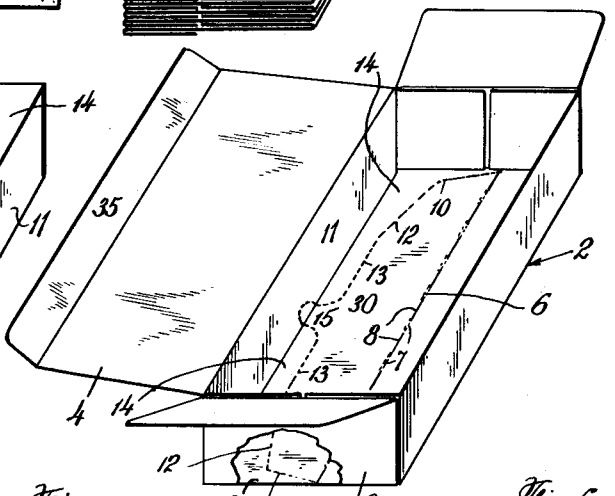

Fig. 4,

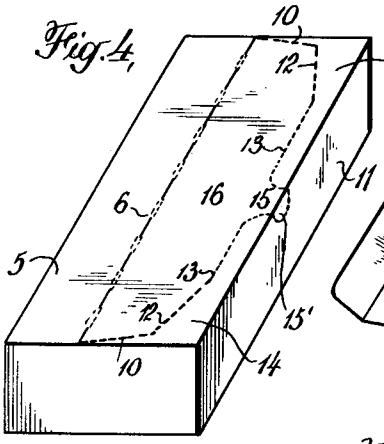

Fig. 5,

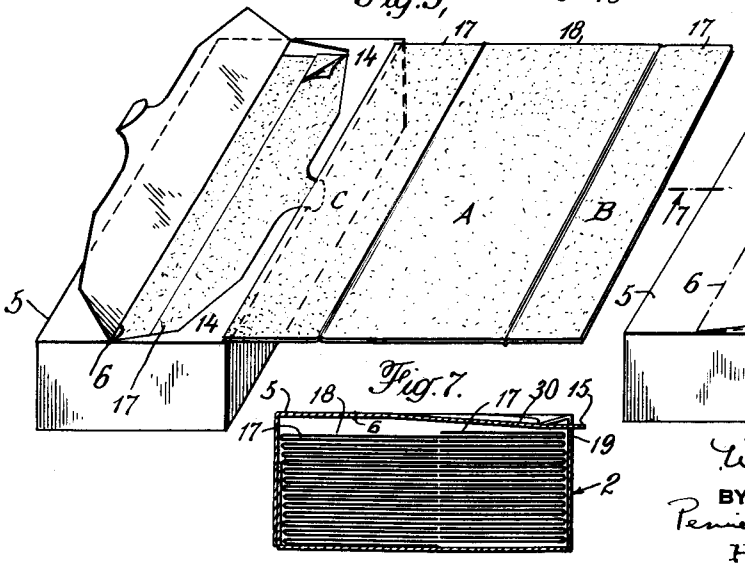

Fig. 6,

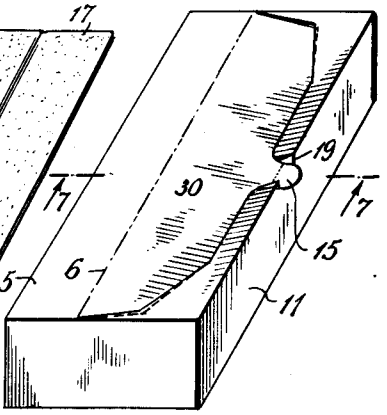

Fig. 7.

INVENTOR:
William Medoff;
BY
Pennie, Davis, Marvin & Edmonds
HIS ATTORNEYS

Patented Nov. 27, 1934 1,982,616

UNITED STATES PATENT OFFICE

1,982,616

PACKAGE

William Medoff, Brooklyn, N. Y., assignor to National Cellulose Corporation, New York, N. Y., a corporation of New York

Application November 10, 1931, Serial No. 574,060

5 Claims. (Cl. 206—57)

This invention is concerned with putting up sheet-material, and especially in packages of the kind from which they can be dispensed. It is particularly concerned with packaging for dispensing those kinds of sheet-material which are highly susceptible to the deteriorating influences of light, moisture, dust, etc., such as face-cleansing tissues made of substantially pure cellulose.

The chief object of the invention is to make up a package out of these delicate articles which, though definitely a dispensing package, will nevertheless be impervious to the detrimental influences mentioned above, not only while the package is in its pristine, unopened condition, but which also, after being opened for the first time, and thereafter after each of the many times it is opened to remove an article therefrom, can be easily rendered impervious again, to thereby keep the soft, tinted sheets fresh and protect them against being stained and hardened by moisture, faded by the light, or contaminated by dust, germs, etc.

Another object of the invention is to provide a package of this improved protective nature which will notwithstanding provide full, ready access to the sheets therein in such a way that it will not be necessary, as in ordinary protective packages, to tear the package to get at the last few sheets in the bottom (which leaves the last few sheets unprotected and results in their ruin), or to make the sheets interlock so that removing one will feed out the edge of the next one below it, whereby even the last sheet will be found as fresh and well preserved as the first one, even though the package is kept longer than the ordinary package.

A further object of the invention is to provide a package of this character which will comprise an unusually great number of extra-size cleansing-tissue sheets so arranged, however, as to occupy but small compass in comparison to the number and size of the sheets, yet from which withal, the sheets can be readily removed independently of each other, one at a time, and without thereby disarranging, exposing or partially removing, any of the other sheets.

It is also an object of the invention to provide a compact, simply manipulated, protective package of this nature which will nevertheless be so constructed that the mere act of pulling a folded sheet outwardly to remove it from the package will unfold it and put it at once into condition for immediately applying the whole area thereof to the face.

The presently preferred embodiment of these concepts is shown in the accompanying drawing, in which

Fig. 1 is a plan view of one of the face-cleansing tissues;

Fig. 2 is a perspective of a plurality of the sheets partially packaged;

Fig. 3 is a perspective of another of the elements of the package, ready to envelope the sheets of Fig. 2;

Fig. 4 is a perspective of the completed package, as on display or in storage;

Fig. 5 is a perspective of the package in use, showing in full lines a sheet fully dispensed, and in dotted lines a sheet partially dispensed;

Fig. 6 is a perspective of the package after a tissue has been removed, with the package in substantially the original airtight condition of Fig. 4, and

Fig. 7 is a cross-section on line 7—7 of Fig. 6.

The package shown in the drawing comprises essentially a plurality of sheets 1, and an envelope, wrapper, or binder 2 therefor. Each of the sheets 1 consists of two-ply, cellulose cleansing-tissue, and the two plys thereof can be separated from each other in use, if desired, but in packaging the sheets according to the present invention, the two plys are so pressed together that they adhere tightly to form in effect a single, rather thick, but completely pliable sheet. The sheets 1 are more or less rectangular in shape and are somewhat larger than the usual face-cleansing tissues.

The package is made up of a considerably larger number of sheets than ordinarily provided and each of these sheets is separately folded in oblated S-form, that is, with a main body portion A, and two flaps B and C on opposite sides of the body portion, at each edge thereof, to form each sheet into an article 1'. The articles 1' are stacked vertically, one on top of the other, without interengaging any part of one sheet with any part of the next sheet below, so that the folded sheets in the stack remain quite separate from each other. Due to this folding and arrangement, the frictional engagement-area is reduced, and a sheet can be removed from the stack without carrying along the next one below it, even though the fibrous surfaces have a rather high coefficient of friction.

The envelope or binder 2 comprises essentially a single sheet of stiffish paper-material, cut and folded as in Fig. 3 to form a member having a bottom 4, a top 5, two sides and two ends, with suitable flaps thereat for uniting same to enclose the articles 1'.

The top-surface 5 of the wrapper-element 2 is

provided with a line of weakness 6, made by scoring the material at regularly spaced intervals for short lengths 7, and incising through the material in the spaces between the scoring, with incisions 8. The so-made line of weakness extends from end to end of the top-surface of the wrapper along a line considerably back of the longitudinal center-line of the top. It does not extend downwardly into the end-surfaces 9, and does not cause the defined portions to be severable one from the other.

The top-surface is also provided with frangible lines 10, 10 starting at the respective ends of the line of weakness 6 and extending convergently towards the front edge 11 of the wrapper. These lines break into more centrally directed frangible lines 12, 12 some distance from the front edge, and the lines 12, 12 break into frangible lines 13, 13, running parallel to the front edge 11, near enough thereto to leave semi-rigid areas or flanges 14, 14 at the front edge of the wrapper. At or about the center of the front edge 11, the lines 13, 13 converge downwardly in the front face to form a frangible loop-area 15. All these lines 10, 12, 13, are so formed in the material as to make the area 30 defined thereby frangible from the rest of the top along these lines 10, 12, and 13. The portion 30 is not completely severable from the top, instead hinging about the line 6.

The stack 3 of cleansing-tissues is introduced through the open bottom of the wrapper made ready in the condition shown in Fig. 3, the end flaps are closed over them, and the bottom 4 is closed over the flaps and the tab 35 is tucked between the stack and the front edge of the wrapper, to which it may either be glued or secured by a sticker overlapping the back edge and the bottom.

The package shown in Fig. 4 is substantially airtight and hence impervious to the entry of light, moisture, dust, etc. The wrapper 2 can be made small in comparison to the relatively great number and size of the sheets, due to the compressibility of the pure cellulose sheets and the manner in which they are folded and arranged, with the result that the completed package is unusually compact and convenient for an article of this class.

In use, the package rests on the portion 4 as the bottom and the portion 30 forms the top. The package is so sealed that the sheets cannot practicably be removed by opening the portion 4.

Instead, to remove a sheet, the package is opened by pressing upwardly and inwardly on the member 15' with the package positioned as shown in Fig. 4. This severs the member 15' from the front face of the package and by then simply gripping the tap 15' and pulling steadily upward and backward, the area 30 of Fig. 4 will come loose from the top surface as far back as line 6, which will act as a hinge about which area 30 can be turned upwardly out of the way, as shown in Fig. 5.

As shown in this figure, this exposes the longer edge 17 of the upper bight B of the topmost sheet 1', but only a very small part of the body or main bight of the folded sheet. The opening thus provided is large enough to permit the whole hand to be inserted, though for the removal of most of the sheets it is only necessary to insert the thumb and index finger of one hand in order to grasp and pull on the edge 17. When, however, all the sheets except the last dozen or so have been removed, the whole hand can be inserted to reach to the bottom and grasp one of these sheets, instead of, as usual tearing the container to get at even the topmost of these last few sheets, which tearing thus leaves the last dozen or so unprotected, to their ruin, as the torn container cannot be closed again tightly enough.

The sheet is pulled out substantially horizontally towards the user, and the outer side of the crease of the bight B is thus brought to bear on the inner side of the flanges 14, 14, and the crease thereof is flattened out to lie in the same plane as the main portion A. Continued pulling brings the inner side of the crease of the lower bight C to bear on the flanges 14, 14, and the final pull will cause these flanges to flatten out the crease and put the lower bight into the same plane as the rest of the sheet. Thus, though the sheets are so folded as to occupy but small compass, the mere act of pulling them out of the package will unfold them into flat condition for immediately applying the whole area thereof to the face.

The sheets are removed one at a time, and due to the way they are folded, to their arrangement in the package, and to the construction of the wrapper, the sheet being removed does not engage and carry along with it out of the package the next lower sheet, or any part thereof. Neither does the sheet being removed disarrange any of the other sheets, as they are all separately packed and so held by the flanged portions of the top that disarrangement is impossible as long as they are in the package.

After a tissue, or the desired number of tissues, are removed, the portion 30 may be closed down against its seating in the top surface, as shown in Fig. 6. The looped area 15 is then pressed out straight and flat and down into the notch 19, the big end of the tab falling into the narrowest part of the notch, whereby it is locked therein, and, due to the interengagement of the serrations on the tab and notch, is firmly held there. The serrations on the part 30 lock with the serrations around the edge of the opening, and also thereby hold the part 30 firmly and with a substantially airtight joint. Thus the package not only is impervious when originally unopened, but can be again rendered so after each time it is opened.

The wrapper 2 may be suitably surface-ornamented, or configured, and may be made of celluloid or the like instead of pasteboard. The package may be made of any desired size, and contain any number of sheets, but preferably contains about 200.

I claim

1. A dispensing package, comprising a plurality of folded sheet articles arranged in a stack, an envelope therefor having an opening extending from a line lying back of the longitudinal center line of the wrapper to a line lying shortly back of the front edge of the package, thereby forming a flange at said front edge, and a plurality of sheet articles folded and stacked as the stack of folded articles being so arranged in the envelope that the inner edge of said flange is brought to bear successively against the fold-lines of said sheets to flatten same out to unfold same when same is removed.

2. A dispensing package, comprising an envelope having an opening in its top, said opening extending from a line lying back of its center-line to a longitudinal line lying shortly back of the front edge of the top, thereby forming a flange at said front edge, and a plurality of sheet articles folded into a main portion and two oppositely directed portions at each edge thereof, said so-folded articles being arranged within the

wrapper with the long edge of the uppermost fold substantially on the longitudinal center-line of the package, whereby pulling out from the package by this edge will unfold a sheet while removing it from the package.

3. A dispensing package, comprising an envelope having an opening in its top, said opening extending from a line lying considerably back of its longitudinal center line to a line lying shortly back of the front edge to form a flange, and from side to side of the wrapper, and a plurality of sheet-articles stacked vertically therein, each of said articles being folded with a bight facing upwardly and underlying said flange, a main bight, and a bight facing downwardly and underlying the back edge of the wrapper, whereby pulling said sheet from said package first brings the outer side of the crease of said first bight to bear against the flange to unfold same and then brings the inner side of the crease of said third bight to bear against said flange to unfold same.

4. A package comprising a container and sheets of material folded and stacked therein, the outer dimensions of the sheets in folded position approximating the inner dimensions of the container, said container being made from a single sheet of material cut and folded to form a bottom, side walls, and a top, the top having a weakened line intermediate opposite edges extending substantially the entire distance thereacross in one direction, a portion in the top lying at one side of said weakened line and frangible from the remainder of the top on all sides except that side defined by the weakened line, which line acts as a hinge, said portion having an opening tab on the side opposite the hinged line, said tab extending beyond one edge of the top and frangibly connected to one of the side walls, the said portion for the greater part of its length, being of a width less than the distance between the weakened line and the edge of the container towards which it extends, whereby the top of the container is provided with flanges which overlie opposite edges of the stacked sheets of material.

5. A package comprising a container and sheets of material folded and stacked therein, the outer dimensions of the sheets in folded position approximating the inner dimensions of the container, said container being made from a single sheet of material cut and folded to form a bottom, side walls and a top, the top having a weakened line intermediate opposite edges extending substantially the entire distance thereacross in one direction, a portion in the top lying at one side of said weakened line and frangible from the remainder of the top on all sides except that side defined by the weakened line, which line acts as a hinge, said portion having an opening tab on the side opposite the hinged line, said portion being of a width less than the distance between the weakened line and the edge of the container towards which it extends, except for said tab, whereby the top of the container is provided with flanges which overlie opposite edges of the stacked sheets of material.

WILLIAM MEDOFF.

wrapper with the long edge of the uppermost fold substantially on the longitudinal center-line of the package, whereby pulling out from the package by this edge will unfold a sheet while removing it from the package.

3. A dispensing package, comprising an envelope having an opening in its top, said opening extending from a line lying considerably back of its longitudinal center line to a line lying shortly back of the front edge to form a flange, and from side to side of the wrapper, and a plurality of sheet-articles stacked vertically therein, each of said articles being folded with a bight facing upwardly and underlying said flange, a main bight, and a bight facing downwardly and underlying the back edge of the wrapper, whereby pulling said sheet from said package first brings the outer side of the crease of said first bight to bear against the flange to unfold same and then brings the inner side of the crease of said third bight to bear against said flange to unfold same.

4. A package comprising a container and sheets of material folded and stacked therein, the outer dimensions of the sheets in folded position approximating the inner dimensions of the container, said container being made from a single sheet of material cut and folded to form a bottom, side walls, and a top, the top having a weakened line intermediate opposite edges extending substantially the entire distance thereacross in one direction, a portion in the top lying at one side of said weakened line and frangible from the remainder of the top on all sides except that side defined by the weakened line, which line acts as a hinge, said portion having an opening tab on the side opposite the hinged line, said tab extending beyond one edge of the top and frangibly connected to one of the side walls, the said portion for the greater part of its length, being of a width less than the distance between the weakened line and the edge of the container towards which it extends, whereby the top of the container is provided with flanges which overlie opposite edges of the stacked sheets of material.

5. A package comprising a container and sheets of material folded and stacked therein, the outer dimensions of the sheets in folded position approximating the inner dimensions of the container, said container being made from a single sheet of material cut and folded to form a bottom, side walls and a top, the top having a weakened line intermediate opposite edges extending substantially the entire distance thereacross in one direction, a portion in the top lying at one side of said weakened line and frangible from the remainder of the top on all sides except that side defined by the weakened line, which line acts as a hinge, said portion having an opening tab on the side opposite the hinged line, said portion being of a width less than the distance between the weakened line and the edge of the container towards which it extends, except for said tab, whereby the top of the container is provided with flanges which overlie opposite edges of the stacked sheets of material.

WILLIAM MEDOFF.

CERTIFICATE OF CORRECTION.

Patent No. 1,982,616. November 27, 1934.

WILLIAM MEDOFF.

It is hereby certified that error appears in the printed specification of the above numbered patent requiring correction as follows: Page 2, lines 135 and 136, claim 1, strike out the words "and a plurality of sheet articles folded and stacked as"; and that the said Letters Patent should be read with this correction therein that the same may conform to the record of the case in the Patent Office.

Signed and sealed this 22nd day of January, A. D. 1935.

Leslie Frazer

(Seal) Acting Commissioner of Patents.