(19) Europäisches Patentamt
European Patent Office
Office européen des brevets

(11) EP 0 754 524 B1

(12) **EUROPEAN PATENT SPECIFICATION**

(45) Date of publication and mention of the grant of the patent:
04.10.2001 Bulletin 2001/40

(51) Int Cl.[7]: **B24B 9/14**, B24B 53/04, B24B 53/14

(21) Application number: **96401573.9**

(22) Date of filing: **16.07.1996**

(54) **Apparatus for dressing a lens grinding stone**

Gerät zum Abrichten eines Linsenschleifsteines

Appareil pour dresser une meule à lentille

(84) Designated Contracting States:
DE ES FR GB IT

(30) Priority: **17.07.1995 JP 18021295**

(43) Date of publication of application:
22.01.1997 Bulletin 1997/04

(73) Proprietor: **KABUSHIKI KAISHA TOPCON**
Tokyo 174 (JP)

(72) Inventor: **Eto, Yasuhito**
Itabashi-ku, Tokyo 174 (JP)

(74) Representative: **Dubois-Chabert, Guy et al**
BREVALEX
3, rue du Docteur Lanceraux
75008 Paris (FR)

(56) References cited:
DE-A- 4 012 658
FR-A- 2 325 465
FR-A- 2 691 663

- **PATENT ABSTRACTS OF JAPAN vol. 13, no. 300 (M-848), 11 July 1989 & JP-A-01 092067 (TOYOTA BANMOTSUPUSU KK), 11 April 1989,**
- **PATENT ABSTRACTS OF JAPAN vol. 13, no. 244 (M-834), 7 June 1989 & JP-A-01 051269 (CITIZEN WATCH CO LTD), 27 February 1989,**
- **PATENT ABSTRACTS OF JAPAN vol. 18, no. 272 (M-1610), 24 May 1994 & JP-A-06 047664 (NIKON CORP), 22 February 1994,**

Note: Within nine months from the publication of the mention of the grant of the European patent, any person may give notice to the European Patent Office of opposition to the European patent granted. Notice of opposition shall be filed in a written reasoned statement. It shall not be deemed to have been filed until the opposition fee has been paid. (Art. 99(1) European Patent Convention).

EP 0 754 524 B1

Printed by Jouve, 75001 PARIS (FR)

Description

BACKGROUND OF THE INVENTION

1. Field of the Invention

[0001] This invention relates to a method and apparatus for dressing a lens grinding stone (diamond-made grindstone) used for grinding the edge of a spectacle lens.

2. Description of the Prior Art

[0002] In a lens grinding apparatus for grinding the edge of a spectacle lens, a circular diamond-made grindstone is used as a lens grinding stone. The diamond-made grindstone has, on its periphery, a diamond layer formed by heating metal powders, which are called "bond", and fine diamond particles under a sintering process. In the beginning of the long-term use of the grindstone, the diamond particles normally protrude from the surface of the outermost layer. In other words, the "sharpness" of the grindstone is very good.

[0003] However, as a result of the long-term use, the grindstone becomes dull because of the fall or abrasion of the diamond particles or because of loading. Accordingly, dressing is carried out in order to reuse the grindstone in a normal state in which the diamond particles normally protrude from the diamond surface and there is no loading.

[0004] Conventionally, a dressing method has been adopted in which a slender dressing stick is pressed against a rotating diamond grindstone with operator's hands while pouring or directing the water onto them in order to sharpen the grindstone.

[0005] However, according to the conventional method, the poured water or particles which have been generated by contact between the dressing stick and the grindstone will be disadvantageously splashed or scattered onto the operator and thereby operator' s clothes are soiled. In addition, high workability cannot always be obtained, in other words, workability depends on the degree of skill of the operator.

[0006] As a solution to the problems, a dressing apparatus has been proposed as shown in, for example, Japanese Patent Application Laid-Open Publication No. JP-A-6 047 664, which is regarded as the closest prior art.

[0007] In the prior art dressing apparatus disclosed in this publication, a dressing stone (dressing disk) is held between lens rotating shaft of a lens grinding apparatus and is pressed against the peripheral surface edge of a lens grindstone of the grinding apparatus while rotating the grindstone 50 as to dress the surface of the grindstone.

[0008] In the dressing apparatus, side faces of the circular dressing disk (dressing stone) are provided with concentric measuring marks by which the quantity of dressing which has been carried out is easily and accurately ascertained.

[0009] On the other hand, in the lens grinding apparatus, two types of lens grindstones are provided which are different in roughness from each other. One is a lens grindstone for rough-cut, and the other one is a lens grindstone for finish-cut. The two grindstones are disposed parallel to each other as a pair.

[0010] Accordingly, in order to dress the two lens grindstones simultaneously, the dressing apparatus also has a pair of circular dressing stones which are different in grain size from each other and are united to be a dressing disk. That is, one is a rough dressing stone for dressing the grindstone for rough-cut, and the other one is a finishing dressing stone, smaller in grain size, for dressing the grindstone for finish-cut.

[0011] This dressing apparatus is designed to simultaneously dress the two lens grindstones different in roughness by means of the two dressing stones different in grain size, respectively. Accordingly, in order to dress and sharpen the lens grindstones, use is made of only one dressing stone having a grain size exclusive to each of the lens grindstones.

[0012] As a result, for example, when the grindstone for finish-cut is dressed, a dressing stone small in grain size (large in mesh number) is used from the beginning of the dressing operation. Therefore, dressing must be carried out bit by bit, and accordingly much time is consumed to complete the dressing operation. In addition, the dressing stones are deeply worn away.

[0013] However, JP-A-01051269 discloses a pair of dressing stones having different roughnesses mounted on a common shaft for successively dressing a grindstone.

SUMMARY OF THE INVENTION

[0014] It is therefore an object of the present invention to provide a dressing method and apparatus for dressing a lens grinding stone, which is capable of dressing it efficiently and in a shorter time and is capable of using a dressing stone economically in a manner in which dressing stones having at least two kinds of grain sizes are provided for dressing the lens grinding stone and one of the two dressing stones which is rougher than the other one is first used to dress the lens grinding stone and then the other one is used to dress it.

[0015] To achieve the object, an apparatus according to the single claim is proposed.

[0016] A thickness of a layer of the pre-dressing stone and a thickness of a layer of the finish-dressing stone are determined with consideration for a dressing quantity and a diameter of each layer of the pre-dressing stone and the finish-dressing stone.

BRIEF DESCRIPTION OF THE DRAWINGS

[0017]

Fig. 1(a) is a schematic view of a lens grinding apparatus which is used as a dressing apparatus according to the present invention but with a not claimed dressing disk, Figs. 1(b) shows an example of a dressing disk according to the invention,
Fig. 2 is a perspective view of the lens grinding apparatus of Fig. 1(a).
Fig. 3 is a descriptive drawing of a control circuit of the lens grinding apparatus of Figs. 1(a)-2.
Fig. 4 is a descriptive drawing of an elevating mechanism of a disk receiving plate of Fig. 2.

DESCRIPTION OF A PREFERRED EMBODIMENT

[0018] Embodiments of the present invention will be described with reference to the attached drawings.

[0019] A lens grinding apparatus is used as an apparatus for dressing a lens grinding stone. First, this lens edge grinding apparatus will be described in an illustrative execution using a dressing stone which is not according to the invention.

<Grinding Elements>

[0020] In Fig. 2, reference character 1 designates a box-like main body of a lens grinding apparatus for grinding the edge of a spectacle lens of normal-rimmed or rimless spectacles, reference character 2 designates an inclined face formed on the front upper portion of the main body 1, reference character 3 designates a liquid crystal display disposed at the left half of the inclined face 2, reference character 4 designates a keyboard disposed at the right half of the inclined face 2, and reference characters 4a-4c designate switches of the keyboard 4.

[0021] Concave portions 1a and 1b are formed in the middle and in the left of the main body 1 respectively. A grindstone 5 rotatably fixed to the main body 1 is disposed in the concave portion la. The grindstone 5 consists of a lens grinding stone 6 for rough-cut and a lens grinding stone 7 for finish-cut. The lens grinding stones 6 and 7 are axially parallel with each other and are rotated by a motor 8 shown in Fig. 3. The diameter of the grinding stone 7 for finish-cut is slightly larger than that of the grinding stone 6 for rough-cut. There is a difference 7a in level between the lens grinding stones 6 and 7. The diametrical relationship between the lens grinding stones 6 and 7 is not limited to that shown. The diameter of the grinding stone 7 for finish-cut may be slightly smaller than or be the same as that of the grinding stone 6 for rough-cut.

<Carriage>

[0022] As shown in Fig. 1(a), a supporting shaft 14 is held in the rear portion of the main body 1, and a carriage 15 is disposed on the main body 1. The carriage 15 consists of a carnage body 15a, arms 15b and 15c formed integrally with the carriage body 15a which extend forward and are parallel with each other, and projections 15d and 15e which respectively jut out from both the sides of the carriage body 15a backwardly.

[0023] The projections 15d and 15e are held by the supporting shaft 14 rotatably on the supporting shaft 14 and movably along the supporting shaft 14. Accordingly, the front end portion of the carriage 15 is rotatable on the supporting shaft 14 in the up and down directions.

[0024] A lens rotating shaft 16 is rotatably held by the arm 15b of the carriage 15 whereas a lens rotating shaft 17 is rotatably held by the arm 15c of the carriage 15. There is a coaxial relationship between the lens rotating shafts 16 and 17. The lens rotating shaft 17 is adjustable to advance toward or retreat from the lens rotating shaft 16. A lens blank L is clamped by the ends of the lens rotating shafts 16 and 17 which face each other. A disk T is detachably fixed to the other end of the lens rotating shaft 16 by a fixing means (not shown). The structure of the fixing means is well known.

[0025] 'The lens rotating shafts 16 and 17 are rotated and driven by a shaft rotating/driving device (shaft rotating/driving means). The shaft rotating/driving device includes a pulse motor 18 fixedly mounted on the carriage body 15a and a power transmitting mechanism (power transmitting means) 19 for transmitting the rotation of the pulse motor 18 to the lens rotating shafts 16 and 17.

[0026] The power transmitting mechanism 19 comprises pulleys 20 and 20 fixed to the lens rotating shafts 16 and 17 respectively, a rotation shaft 21 rotatably held by the carriage body 15a, pulleys 22 and 22 fixed to both the ends of the rotation shaft 21 respectively, a timing belt 23 stretched between the pulleys 20 and 22, a gear 24 fixed to the rotation shaft 21, a pinion 25 for the output of the pulse motor 18, and so forth.

[0027] A rear portion of a supporting arm 26 disposed in the concave portion 1a of the apparatus body 1 is held by the supporting shaft 14 so that the supporting arm 26 can move laterally. The supporting arm 26 is rotatable relatively with respect to the carriage 15 and is movable laterally in unison with the carriage 15. The middle of the supporting arm 26 is held by a shaft (not shown) so as to move laterally.

[0028] The carriage 15 is movable laterally by means of a pulse motor 31 serving as a means for moving the carriage 15 laterally, a pulley (not shown), a wire (not shown), and the like. Since this construction is well known, a detailed drawing of it is omitted.

[0029] As shown in Fig. 4, a carriage elevating means 36 is disposed under the disk T.

[0030] The carriage elevating means 36 comprises

links 37, 37 of which base ends are rotatably fixed to the supporting arm 26 by means of pivots 37a, 37a so that free ends of the links 37, 37 can rotate up and down, a link 38 rotatably fixed to the free ends of the links 37, 37 by means of pivots 37b, 37b, a supporting rod 39 extending from the link 38 upward, and a disk receiving plate 40 disposed on the upper end of the supporting rod 39.

[0031] Additionally, the carriage elevating means 36 comprises a shaft member 41 perpendicular to the supporting rod 39 and extending from the link 38 forward, a bearing member 42 which bears the shaft member 41 by moving in a direction in which the carriage 15 moves, a female-screw barrel 43 formed integrally with the bearing member 42 and held by the apparatus body 1 at a position (not shown) movably up and down but unrotatably an its axis, a male screw 44 engaged with the female-screw barrel 43, and a pulse motor 45 fixed to the apparatus body 1 for rotating and driving the male screw 44,

(Electrical Elements)

[0032] An arithmetic and control circuit 100 (control means) includes a drive controller 101 and a frame data memory 102. The drive controller 101 drives and controls the aforementioned motor 8, the pulse motors 18, 31, 45, a pulse generator 106, and so forth.

[0033] The arithmetic and control circuit 100 actuates and controls a shape measuring device 50 for measuring the shape of a spectacle lens (or template) of rimless spectacles by actuating the drive controller 101 and emitting a driving pulse from the pulse generator 106. Information about the shape measured by the shape measuring device 50 is stored in the data memory 102 in the form of radius vector data (ρi, θi, Zi) where i= 1, 2, 3, ...N.

[0034] Reference character 200 designates a switch for starting dressing. The switch 200 is operated when the lens grinding apparatus is used as a dressing apparatus. Instead of the switch 200, a mode changing switch may be used by which a change-over is carried out between a dressing mode and a lens grinding mode.

[0035] For example, if loading occurs in the surface of the finish-grinding stone 7 by reason of the fact that the spectacle lens has been ground by the lens grinding apparatus constructed as above, the lens grinding apparatus is used as a dressing apparatus by attaching a dressing disk to the lens grinding apparatus.

[0036] In more detail, as shown in Fig. 1(a), a dressing disk 60 instead of the lens blank L is clamped between the lens rotating shafts 16 and 17, and thereby the lens grinding apparatus can be used as a dressing apparatus for dressing the grinding stone 7.

[0037] The dressing disk 60, shown to illustrate the apparatus, but which is however not according to the invention, consists of a circular rough dressing stone (pre-dressing stone) 61 and a circular finish-dressing stone 62 which are united coaxially and integrally with each other. The dressing stones 61 and 62 have engagement hollows 61a and 62a, respectively, at the centers. When the dressing disk 60 is held between the lens rotating shafts 16 and 17, the ends 16a and 17a of the shafts 16 and 17 are engaged with the engagenant hollows 61a and 62a, respectively. The diameter of the dressing disk 60 is, for example, 70mm.

[0038] A dressing stone whose mesh number is below 2,500# is used as the rough dressing stone 61. In this embodiment, the mesh number for the rough dressing stone 61 is, for example, 1,500#. Reference sign # designates a mesh. On the other hand, a dressing atone whose mesh number is above 2,500# is used as the finish-dressing stone 62. In this embodiment, the mesh number for the finish-dressing stone 62 is, for example, 3,000#.

[0039] In order to dress the peripheral surface of the grinding stone 7 for finish-cut by means of the dressing disk 60 constructed as above, the dressing starting switch 200 is turned on or the mode of the apparatus is changed to a dressing mode by operating a mode changing switch (not shown) and then a starting switch is pushed while holding the dressing disk 60 between the lens rotating shafts 16 and 17.

[0040] Thereby, the arithmetic and control circuit 100 actuates and controls the pulse motor 31, thereby controlling the lateral movement of the carriage 15. As a result, the rough dressing stone 61 is placed over the grinding stone 7 for finish-cut. Thereafter, the arithmetic and control circuit 100 controls the pulse motor 8 to rotate the grindstone 5 and, at the sane time, controls the pulse motor 18 to slowly rotate the shafts 16 and 17 and thereby rotate the rough dressing stone 61 slowly.

[0041] Subsequently, the arithmetic and control circuit 100 controls the pulse motor 45 to lower the receiving plate 40. Following the downward movement of the receiving plate 40, the free ends of the carriage 15 and the dressing disk 60 go down because of their own weight.

[0042] As a result of the descent of the free end side of the carriage 15, namely, the descent of the dressing disk 60, the peripheral surface of the rough dressing stone 61 is pressed against the peripheral surface of the finish-grinding stone 7 under the weight of the carriage 15, the dressing disk 60, etc. In this state, rough dressing is carried out in which the roughness (convexity and concavity) of the surface of the finish-grinding stone 7 is smoothed by the rough dressing stone 61, whose dressing quantity is relatively large, by a predetermined quantity in a short time. The dressing quantity in this rough dressing operation depends on the quantity of descent of the receiving plate 40, namely, depends on the quantity of operation control of the pulse motor 45.

[0043] After the completion of the rough dressing of the finish-grinding stone 7, the arithmetic and control circuit 100 controls the pulse motor 45 to raise the receiving plate 40 and thereby raise the free ends of the car-

riage 15 and the dressing disk 60. The peripheral surface of the rough dressing stone 61 is placed a predetermined distance away upwardly from the peripheral surface of the finish-grinding stone 7. The operation of the pulse motor 45 is stopped.

[0044] Thereafter, the arithmetic and control circuit 100 controls the pulse motor 31 to move the carriage 15 laterally so that the finish-dressing stone 62 is placed over the finish-grinding stone 7. The pulse motor 8 is then controlled to rotate the grindstone 5 and, at the same time, the pulse motor 18 is controlled to slowly rotate the shafts 16 and 17 and thereby rotate the rough dressing stone 61 slowly.

[0045] Thereafter, the arithmetic and control circuit 100 controls the pulse motor 45 to lower the plate 40. Following the downward. movement of the plate 40, the free ends of the carriage 15 and the dressing disk 60 go down because of their own weight.

[0046] As a result of the descent of the free end side of the carriage 15, namely, the descent of the dressing disk 60, the peripheral surface of the finish-dressing stone 62 is pressed against the peripheral surface of the finish-grinding stone 7 under the weight of the carriage 15, the dressing disk 60, etc. In this state, finishing dressing is carried out to dress the surface of the finish-grinding stone 7 by a predetermined quantity. The dressing quantity in the finish-dressing process depends on the quantity of descent of the receiving plate 40, namely, the quantity of operation control of the pulse motor 45.

[0047] After the completion of the finishing dressing of the finish-grinding stone 7, the arithmetic and control circuit 100 controls the pulse motor 45 to raise the plate 40 and thereby raise the free ends of the carriage 15 and the dressing disk 60. The peripheral surface of the finish-dressing stone 62 is placed a predetermined distance away upwardly from the peripheral surface of the finish-grinding stone 7. The operation of the pulse motor 45 is stopped, and thereby the dressing (sharpening) of the finish-grinding stone 7 is completed.

[0048] As mentioned above, rough dressing is first carried out in which the roughness (convexity and concavity) of the surface of the finish-grinding stone 7 is smoothed by the rough dressing stone 61, whose mesh number is smaller than that of the finish-grinding stone 7 and whose dressing quantity is relatively large, by a predetermined quantity in a short tine, and then finishing dressing is carried out in which the finish-grinding stone 7 (diamond grindstone) is sharpened by the finish-dressing stone 62 whose mesh number is larger than that of the finish-grinding stone 7. Accordingly, time required for the dressing operation can be shortened.

[0049] If the diameter of the rough grinding stone 6 is smaller than or same as that of the finish-grinding stone 7, the carriage 15 is moved to a position where the rough dressing stone 61 is not in contact with the rough grinding stone 6 and, at the position, rough dressing is carried out for the finish-grinding stone 7. Thereafter, the dressing disk 60 is removed from between the lens rotating shafts 16 and 17, and the dressing disk 60 is again held between the shafts 16 and 17 so that the finish-dressing stone 62 is situated on the left side in the drawing. In this state, the carriage 15 is moved to a position where the finish-dressing stone 62 is not in contact with the rough grinding stone 6 and, at this position, finishing dressing is carried out for the finish-grinding stone 7. Accordingly, the finishing dressing can be carried out without bringing the dressing disk 60 into contact with the rough grinding stone 6.

[0050] The dressing disk 60 of the execution shown for illustrative purposes consists of the circular rough dressing stone 61 and the circular finish-dressing stone 62 which are arranged coaxially. But in the present invention a dressing stone 70 shown in Fig. 1(b) is used.

[0051] The dressing stone 70 consists of concentrical annular layers of rough dressing stone layers (pre-dressing stone layers, i.e., pre-dressing stones) a, c, and e, and finish-dressing stone layers (finishdressing stones) b, d, and f and is in alternating layers of the rough dressing stone and the finish-dressing stone. The diameter of the dressing stone 70 is, for example, 70mm.

[0052] In order to determine the respective thicknesses of the rough dressing stone layers a, c, and e, and the finish-dressing stone layers b, d, and f, consideration is given to a dressing quantity and a diameter of each of the annular layers a-f.

[0053] Accordingly, as the layers a, c, and e or the layers b, d, and f come nearer to the center of the dressing stone 70, they increase in thickness. Additionally, the first rough dressing stone layer a is thicker than the first finish-dressing stone layer b, and likewise the rough dressing stone layers c and e are thicker than the finish-dressing stone layers d and f, respectively. For example, the layer a is 2mm thick, the layer c is 4mm thick, the layer e is 6mm thick, the layer b is 1.5mm thick, the layer d is 3mm thick, and the layer f is 4.5mm thick,

[0054] As a result of thus setting the respective thicknesses of the rough dressing stone layers a, c, and e, and the finish-dressing stone layers b, d, and f, a dressing quantity in rough dressing and a dressing quantity in finishing dressing are made substantially constant with respect to the finish-grinding stone 7.

[0055] A dressing stone whose mesh number is below 2,500# is used as the rough dressing stones a, c, and e. For example, the mesh number of the rough dressing stone is 1,500#. Reference sign # designates a mesh. On the other hand, a dressing stone whose mesh number is above 2,500# is used as the finish-dressing stones b, d, and f. For example, the mesh number of the finish-dressing stone is 3,000#. Reference character 70a designates an engagement hole formed at the center for engagement with the ends 16a and 17a of the shafts 16 and 17.

[0056] As in the case using the disk 60, the dressing stone 70 is held between the shafts 16 and 17. The pe-

ripheral surface of the dressing stone 70 which is rotating is pressed against the peripheral surface of the rotating finish-grinding stone 7. Rough dressing is first carried out for the finish-grinding stone 7 while the dressing stone layer a is being abraded. When the dressing stone layer a is completely abraded, the dressing stone layer b appears, and thereby finishing dressing is carried out for the finish-grinding stone 7. Immediately before the dressing stone layer b is completely abraded, finishing dressing for the finish-grinding stone 7 is stopped. At this time, first dressing operation by the use of the dressing stone layers a and b is completed.

[0057] When the finish-grinding stone 7 again becomes dull, the dressing stone layers c and d are used for dressing it. When the finish-grinding stone 7 again becomes dull, the dressing stone layers e and f are used for dressing it.

[0058] As mentioned above, when dressing the finish-grinding stone 7, the dressing stone 70 is first pressed against the peripheral surface of the finish-grinding stone 7, and then the rough dressing and the finishing dressing are continuously carried out without moving the dressing stone 70 laterally. Accordingly, time required for the dressing can be shortened.

[0059] Additionally, rough dressing is first carried out in which the roughness (convexity and concavity) of the surface of the finish-grinding stone 7 is smoothed by the rough dressing stone a (c, e), whose mesh number is smaller than that of the finish-grinding stone 7 and whose dressing quantity is relatively large, by a predetermined quantity in a short time, and then finishing dressing is carried out in which the finish-grinding stone 7 (diamond grindstone) is sharpened by the finish-dressing stone b (d, f) whose mesh number is larger than that of the finish-grinding stone 7. Accordingly, time required for the dressing can be shortened.

[0060] On the supposition that the mesh number of the finish-grinding stone 7 (diamond grindstone) is 2,500# and by setting this mesh number as a standard, the mesh number 1,500# is selected for the rough dressing stone, and the mesh number 3,000# is selected for the finish-dressing stone. But, the present invention is not limited to this.

[0061] According to a dressing method and a dressing apparatus of the present invention, a dressing process can be also given to a diamond grindstone having a mesh number except 1,000#. The present invention is applicable to a diamond grindstone whose mesh number is, for example, one of 1,000# to 4,000#. In this case, a mesh number of the rough dressing stone is smaller than that of the diamond grindstone (lens grinding stone)(i.e., the rough dressing stone is rougher than the diamond grindstone), and a mesh number of the finish-dressing stone is larger than that of the diamond grindstone (i.e., the finish-dressing stone is finer than the diamond grindstone).

[0062] As mentioned above, according to a method of dressing a lens grinding stone according to the present invention, a dressing stone is pressed against the peripheral surface of the lens grinding stone in order to dress the lens grinding stone. The dressing takes a first step of dressing the lens grinding stone with a pre-dressing stone and a second step of dressing the lens grinding stone with a finish-dressing stone. Accordingly, since dressing is efficiently carried out, time required for the dressing can be shortened and, in addition, the dressing stones can be used with greater economy.

[0063] Further, since a dressing stone consists of at least one pre-dressing stone which is rougher than the lens grinding stone to be dressed and a finish-dressing stone which is as fine as or finer than the lens grinding stone, dressing can be efficiently carried out.

[0064] If the pre-dressing stone and the finish-dressing stone are integrally united with each other, the resultant dressing stone can be easily operated.

[0065] Further, in an apparatus for dressing a lens grinding stone according to the present invention, a dressing disk detachably held between a pair of rotatable shafts is pressed against the peripheral surface of the rotating grinding stone in order to dress the grinding stone. The dressing disk is constructed by integrally uniting at least one pre-dressing stone which is rougher than the lens grinding stone with a finish-dressing stone which is as fine as or finer than the lens grinding stone. Accordingly, dressing can be efficiently carried out with the dressing disk constructed simply and can be carried out in a shorter time. In addition, the dressing stones can be used with greater economy.

[0066] Further, since a dressing stone is constructed by concentrically and alternately piling pre-dressing stone layers and finish-dressing stone layers, rough dressing and finishing dressing can be continuously carried out at the same position without moving the dressing stone laterally. Accordingly, dressing for the lens grinding stone can be carried out in a shorter time.

[0067] Further, the respective thicknesses of the pre-dressing stone layers and the finish-dressing stone layers are determined with consideration for respective dressing quantity and diameters of the layers. Accordingly, in a case in which the pre-dressing stone layer and the finishing dressing stone layer are used as a pair of layers in order to dress the lens grinding stone , even if dressing is carried out by means of the pre-dressing stone layer and the finishing dressing stone on the outer or central side of the dressing stone, dressing can be always carried out under the same condition.

Claims

1. A dressing apparatus for dressing an edge of a lens grinding stone (7) by pressing a dressing stone (70) which is detachably held between a pair of rotating shafts (16, 17) against the edge of said lens grinding stone (7) which is rotating, **characterized in that** said dressing stone (70) has a structure of a plurality

of layers (a, b, c, d, e, f) comprising a pre-dressing stone layer (a, c, e) and a finish-dressing stone layer (b, d, f), each being laminated concentrically and alternately on each other, said pre-dressing stone layer (a, c, e) being composed of a grinding stone rougher than said lens grinding stone (7) to be dressed, said finish-dressing stone layer (b, d, f)being composed of a grinding stone as fine as or finer than said lens grinding stone (7).

Patentansprüche

1. Bearbeitungsvorrichtung zum Bearbeiten einer Kante eines Linsenschleifsteins (7) durch Drükken eines Bearbeitungssteins (70), der lösbar zwischen einem Paar von sich drehenden Wellen (16, 17) gehalten ist, gegen die Kante des Linsenschleifsteins (7), welcher sich dreht, **dadurch gekennzeichnet, daß** der Bearbeitungsstein (70) eine Struktur aus mehreren Schichten (a, b, c, d, e, f) hat, welche eine Vorbearbeitungs-Steinschicht (a, c, e) und eine Endbearbeitungs-Steinschicht (b, d, f) aufweisen, die jeweils konzentrisch und abwechselnd aufeinander geschichtet sind, wobei die Vorbearbeitungs-Steinschicht (a, c, e) aus einem Schleifstein zusammengesetzt ist, der rauer als der zu bearbeitende Linsenschleifstein (7) ist, und die Endbearbeitungs-Steinschicht (b, d, f) aus einem Schleifstein zusammengesetzt ist, der so fein wie oder feiner als der Linsenschleifstein (7) ist.

Revendications

1. Appareil de dressage pour dresser un bord d'une meule à lentille (7) en pressant une meule de dressage (70) qui est maintenue de manière amovible entre deux arbres rotatifs (16, 17) contre le bord de ladite meule à lentille (7) qui tourne, **caractérisé en ce que** ladite meule de dressage (70) a une structure d'une pluralité de couches (a, b, c, d, e, f) comprenant une couche de meule de prédressage (a, c, e) et une couche de meule de dressage de finition (b, d, f), chacune étant déposée de manière concentrique et alternativement l'une sur l'autre, ladite couche de meule de prédressage (a, c, e) étant composée d'une meule plus grossière que ladite meule à lentille (7) à dresser, ladite couche de meule de dressage de finition (b, d, f) étant composée d'une meule aussi fine ou plus fine que ladite meule à lentille (7).

FIG.1(a)

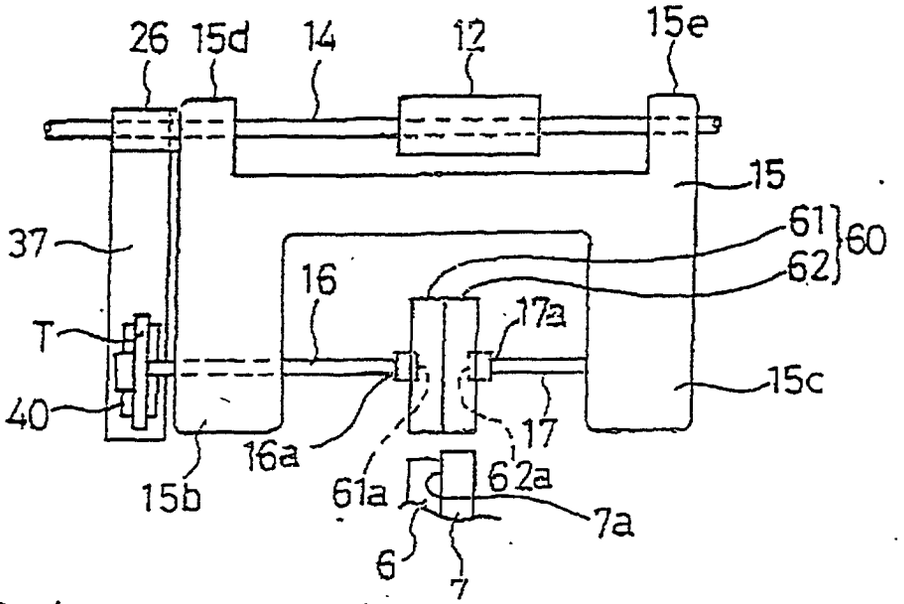
26
15d
14
12
15e
15
37
61
60
62
16
17a
T
40
15c
17
16a
15b
61a
62a
7a
6
7

FIG.1(b)

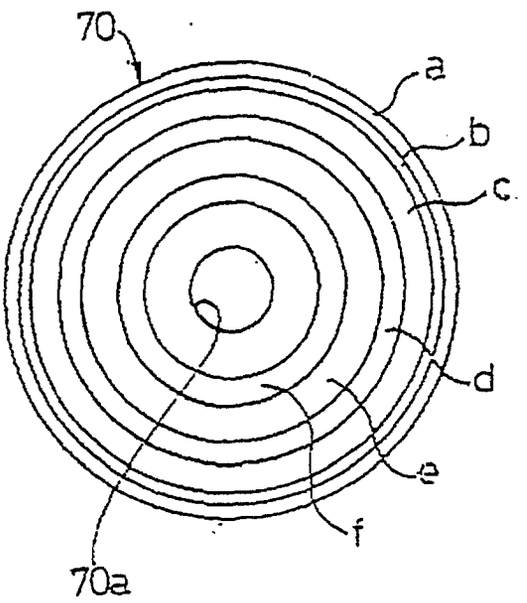
70
a
b
c
d
e
f
70a

FIG. 2

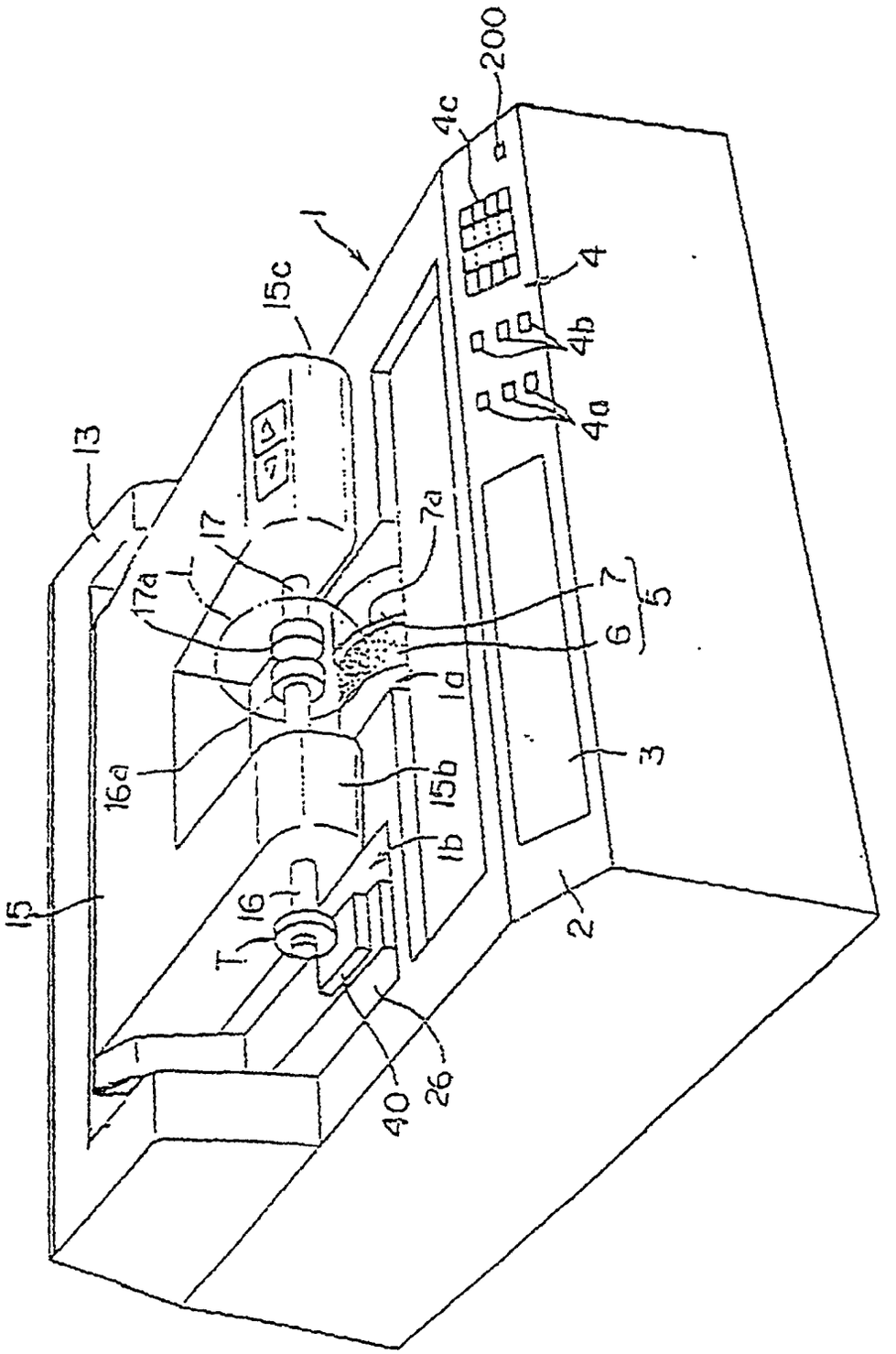

FIG.3

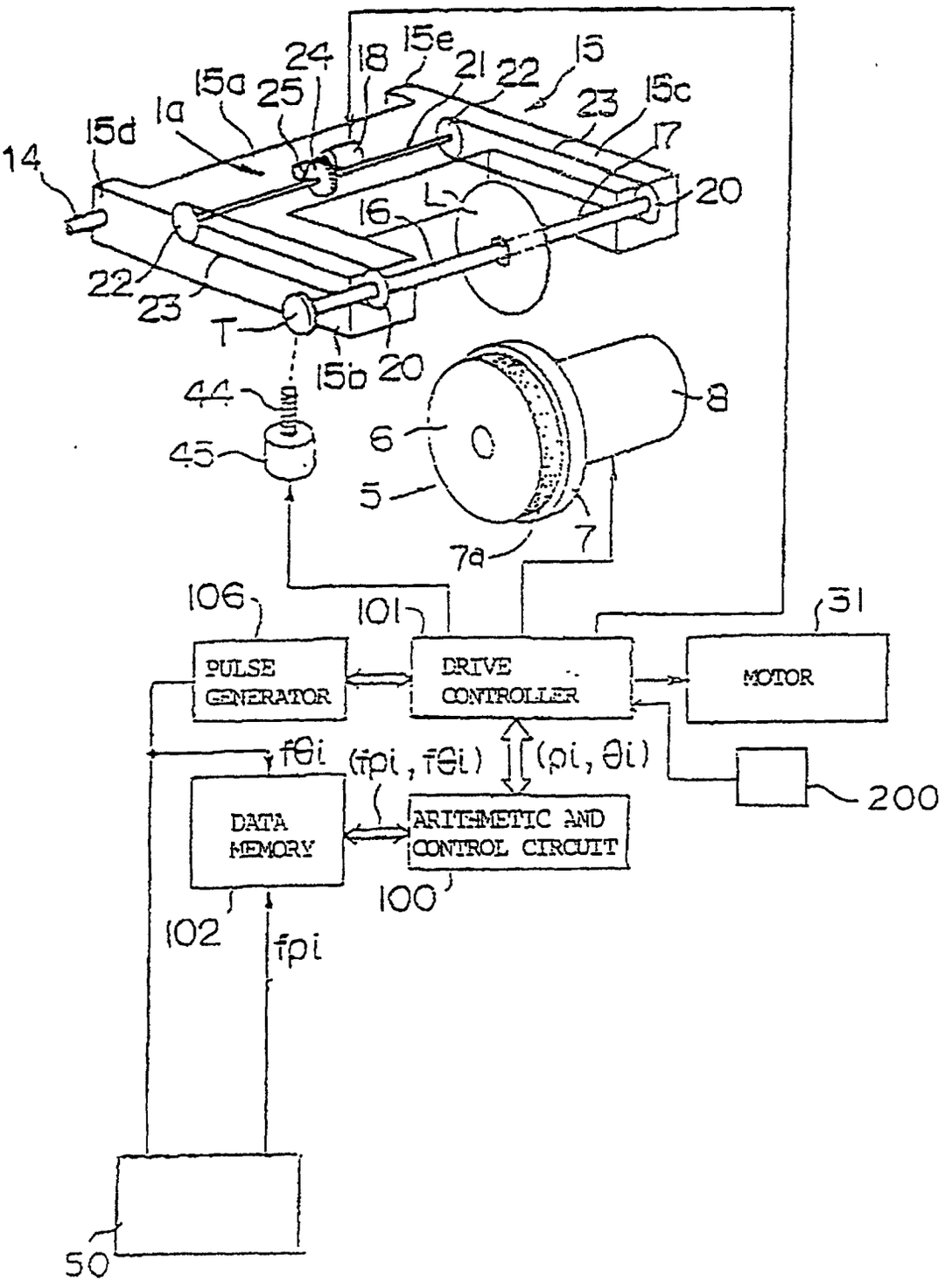
14
15d
1a
15a
25
24
18
15e
21
22
15
23
15c
17
20
16
L
22
23
T
15b
20
44
45
6
0
8
5
7
7a
106
101
31
PULSE GENERATOR
DRIVE CONTROLLER
MOTOR
fθi
(fpi, fθi)
(ρi, θi)
200
DATA MEMORY
ARITHMETIC AND CONTROL CIRCUIT
100
102
fpi
50

FIG. 4

