March 15, 1960 W. B. McLEAN 2,928,347

INERTIA ARMING SWITCH

Original Filed Nov. 29, 1944 2 Sheets-Sheet 1

FIG. 1.

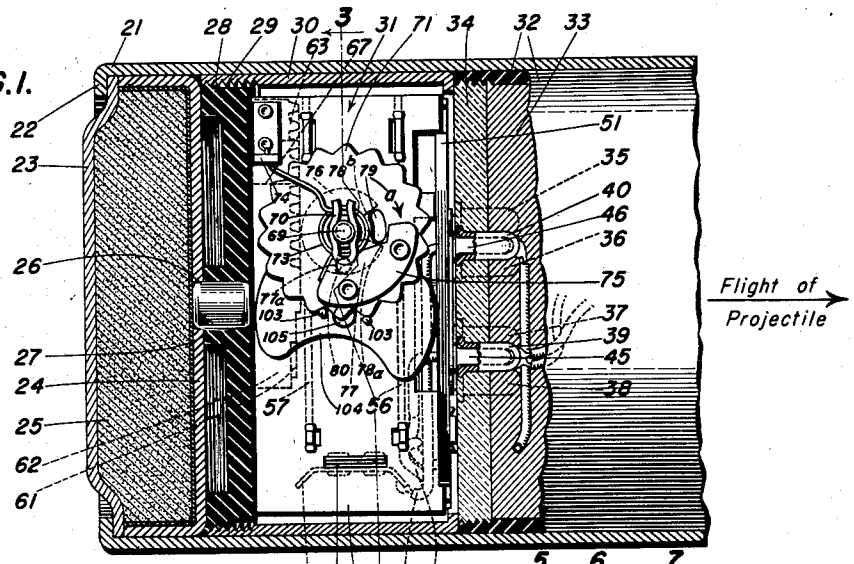

FIG. 2.

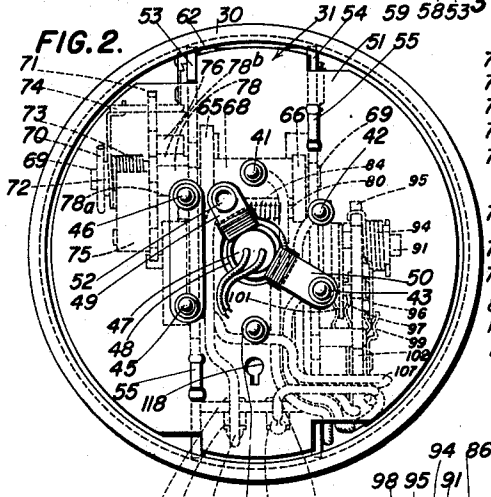

FIG. 3.

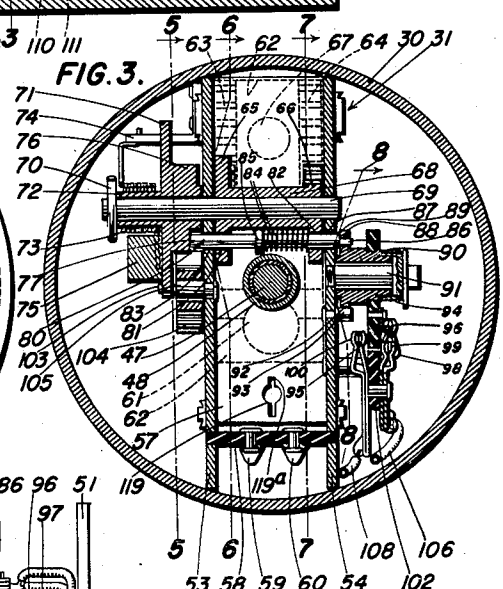

FIG. 15.

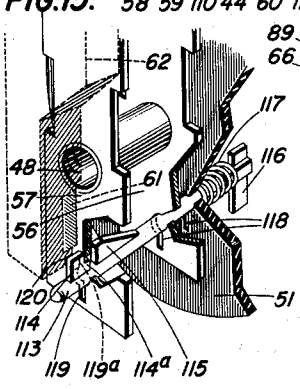

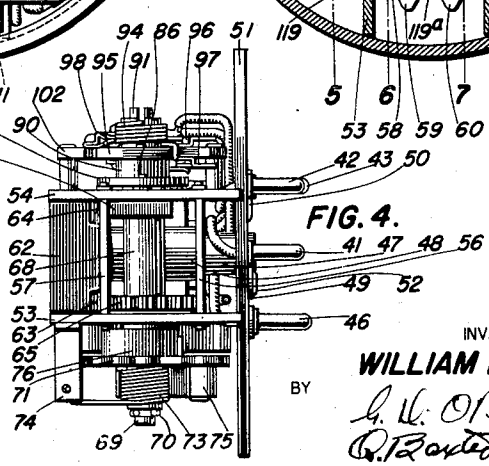

FIG. 4.

INVENTOR
WILLIAM B. McLEAN
BY
G. H. O'Brien
Q. Baxter Warner
ATTORNEYS

March 15, 1960 W. B. McLEAN 2,928,347

INERTIA ARMING SWITCH

Original Filed Nov. 29, 1944 2 Sheets-Sheet 2

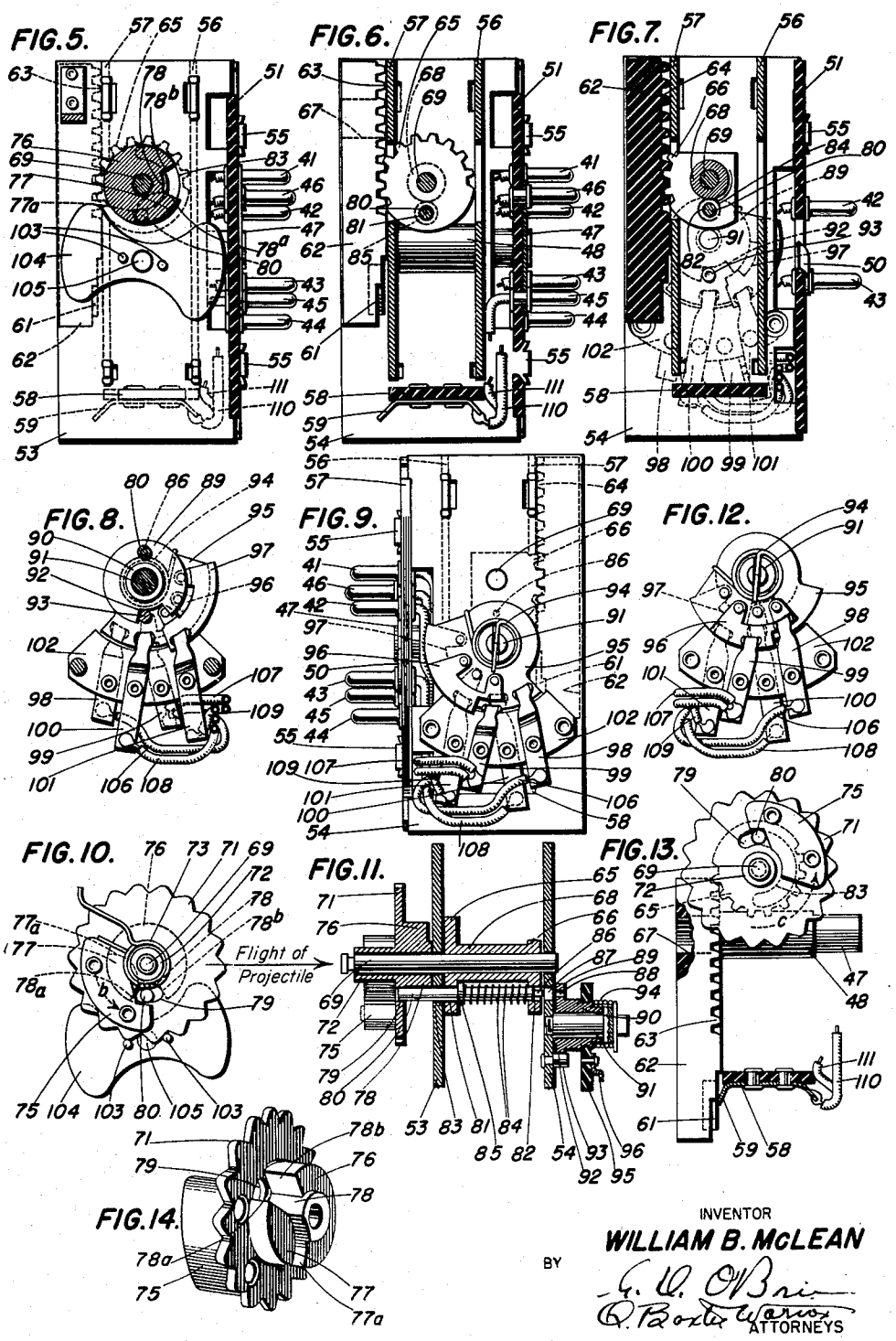

INVENTOR
WILLIAM B. McLEAN

BY G. D. O'Brien
Q. Boxter Warren
ATTORNEYS

United States Patent Office 2,928,347
Patented Mar. 15, 1960

2,928,347

INERTIA ARMING SWITCH

William B. McLean, Washington, D.C., assignor to the United States of America as represented by the Secretary of the Navy

Original application November 29, 1944, Serial No. 565,782, now Patent No. 2,872,538, dated February 3, 1959. Divided and this application July 16, 1953, Serial No. 368,544

3 Claims. (Cl. 102—70.2)

(Granted under Title 35, U.S. Code (1952), sec. 266)

This invention relates to arming switches of the type which is operated by inertia and more particularly to a novel inertia arming switch for use with explosive projectiles. The new switch operates upon sustained acceleration of the projectile in flight to close an arming circuit and upon substantial cessation of the acceleration to close a second arming circuit, whereby the switch provides a dual safety factor. The switch may be used to particular advantage in electrically operated proximity fuzes for rocket projectiles but may be used also with other types of fuzes and projectiles.

In firing a projectile, such as a rocket with a proximity fuze or other detonating device employing an electronic tube, it is important for the sake of safety to delay the arming of the device until the projectile has traveled a certain distance from the operator, and to allow time for heating of the electronic tube. In this way premature explosions resulting from the shock of firing or from rough handling may be avoided. This application is a division of copending application Serial No. 565,782, now Patent No. 2,872,538, filed November 29, 1944.

An object of the invention is to provide a switch, operable by a setback action or inertia, to close a circuit within a fraction of a second after the elapse of a predetermined interval of time after firing.

Another object is to provide a switch which closes a second circuit after a predetermined time interval subsequent to closing a first circuit, after substantial cessation of the acceleration.

Another object is to provide a switch which operates only in response to the sustained acceleration of a projectile and does not operate unless both the degree of acceleration and the duration thereof are sufficient. The new switch resets to a safe position if the acceleration is not maintained for a proper duration, and remains unresponsive to a sudden shock or to the cumulative effect of repeated shocks.

A further object is in the provision of an additional safety feature in the switch, comprising a movable shield covering the detonator during a time interval after firing.

Another object is to provide a setback switch for closing a plurality of circuits according to a predetermined time sequence and which is simple in construction and accurate in operation.

Other objects and advantages of the invention will appear in the following specification, reference being had to the accompanying drawings in which:

Fig. 1 is a longitudinal section of a portion of a proximity fuze for an explosive projectile embodying one form of the new setback switch, which is shown in elevation and in its set position;

Fig. 2 is a front elevation of the switch and its cylindrical housing;

Fig. 3 is a vertical section on the line 3—3 of Fig. 1, the fuze can being omitted;

Fig. 4 is a plan view of the switch;

Figs. 5, 6 and 7 are vertical sections on the lines 5—5, 6—6 and 7—7, respectively, of Fig. 3;

Fig. 8 is a vertical section on the line 8—8 of Fig. 3, particularly showing the relationship of the electrical contacts in the set position of the switch;

Fig. 9 is a side elevation of the switch as seen from the contact side the switch again being shown in the set position.

Fig. 10 is a detail elevation of the switch from a position opposite to that in Fig. 9, showing the position of the toothed wheel in response to setback;

Fig. 11 is a vertical section similar to Fig. 3 but omitting parts, showing the released position of the contacts as the result of the setback action;

Fig. 12 is a detail elevation of a portion of the switch shown in Fig. 9, illustrating the closure of the electrical contacts when released by setback;

Fig. 13 is a detail view partly in elevation and partly in section, showing the final position of parts of the switch;

Fig. 14 is a perspective view of the toothed wheel, showing the innermost structure, and

Fig. 15 is a fragmentary perspective view of the switch showing a safety key for preventing insertion of the switch in a fuze assembly when the switch is improperly set.

Reference is first made to Fig. 1 wherein 21 designates a portion of a can forming part of a proximity fuze for an explosive projectile, for example, a fuze of the type disclosed in a copending application of Wilbur S. Hinman, Jr. and Harry Diamond, Serial No. 537,983, filed May 30, 1944, now Patent No. 2,856,852. The can is crimped or spun at 22 to hold a closure 23 in place against a cup 24, the rim of which is preferably welded or brazed to the inside surface of the can. The cup contains a volume of tetryl 25 which constitutes the booster for the main powder charge in the projectile (not shown).

An opening 26 centrally located in the bottom of the cup 24 communicates with a central opening 27 in a cover plate 28 which is screwed into the internally threaded end 29 of a cylindrical housing 30 for the setback switch 31 of my invention. The housing 30 fits tightly between the plate 28 and the rim of a battery and condenser case 32. A potting compound 33 immobilizes the cells of A, B and C batteries and a condenser (none shown). An end cap 34 is screwed into that end of the case 32 adjacent the housing 30, for the purpose of confining the compound 33 and providing a convenient means for mounting electrical connections between the setback switch and the electrical apparatus in the case 32.

The cap 34 has sockets 35, 36, 37, 38, 39 and 40 adapted to receive plugs 41, 42, 43, 44, 45 and 46, respectively (Fig. 2), connected to the setback switch 31 and to a detonator 47. The detonator is inserted in a tube 48 located centrally of the switch chassis, where it is held in place by the tension in the ends of a pair of clips 49, 50. The clips are included in a firing circuit which, when closed, ignites the detonator and thus the tetryl 25. The clips 49, 50 are secured to an insulating disk 51 which forms the forward face of the switch. A rivet 52 secures the clip 49, while the clip 50 is secured by the plug 43.

The disk 51 is a rigid part of the switch chassis or case. It is suitably secured to a pair of plates 53, 54, as by means of partially swaged lugs 55 protruding from the forward edges of the plates through openings in the disk. The plates 53, 54 are spaced in parallelism by a pair of partitions 56, 57 which are secured to the plates by partially swaged lugs. An insulating plate 58 is held between the plates 53, 54 and carries flexible contacts 59, 60 which, in the type of fuze contemplated, serve to connect the detonator in a thyratron circuit when the contacts are bridged by a contactor 61. The contactor

61 is embedded in an insulating slide 62 which does not move during setback caused by acceleration of the projectile, but which does move after acceleration has practically ceased, as will be described in greater detail presently.

The slide 62 occupies and is movable in a passageway formed by portions of the plates 53, 54, the partition 57 and a portion of the cover plate 28. The forward longitudinal edges of the slide have racks 63 and 64, which, respectively, mesh with mutilated gears 65, 66 (Figs. 6 and 7) in the initial or set position of the switch. In this position, a hole 67 in the slide 62 is out of registration with the opening 27 and the coaxial detonator tube 48, the solid portions of the slide acting as a safety gate which guards the tetryl 25 from ignition should the detonator be fired prematurely.

Gear 65 has a sufficiently long tooth course (Fig. 6) to insure driving the slide 62 laterally of the switch to its final position (Fig. 13) wherein its hole 67 registers with the tube 48 to admit the detonator blast. The detonator is connected in circuit when the contactor 61 bridges the contacts 59, 60, which occurs when the slide reaches its final position. The detonator circuit is thus closed and armed by the moving slide. Since some time is consumed by the gear 65 in driving the slide 62 to its final or circuit-closing position, it follows that arming of the detonator circuit is delayed a definite time interval after the slide commences to move from its initial or set position.

Gear 66 has a relatively short tooth course (Fig. 7), and the purpose of the few teeth initially in mesh with the rack 64 is to provide a direct locking of the sliding rack to the side frame by means of the pin. To this end, the gears 65, 66 turn as a unit since they are integral with the ends of a connecting hub 68 between the plates 53, 54 (Fig. 3). The hub and gear assembly is mounted upon and appropriately secured to a shaft 69 rotatably mounted in holes in the plates 53, 54.

One end of the shaft 69 extends outwardly from the plate 53 and is annularly grooved to contain a spring key 70. The key 70 retains a freely rotatably toothed wheel 71 upon the shaft extension. The wheel 71 has a sleeve 72 (Fig. 3) around which a spring 73 is coiled, one end of the spring being anchored to a bracket 74 on the frame, and the other end resting behind an off-centered weight 75 on the outer face of the wheel.

On the inner face of the wheel 71 is a hub 76 having a cam 77 formed by a step or cut-out portion. The hub has a marginal recess 78 (Fig. 14), the edges 78*a*, 78*b* of which coincide with the ends of an arcuate slot 79 in the toothed wheel 71. This slot is adapted to be entered by the outer blunt end of a pin 80 during the setback action of the switch (Fig. 14), but the pin 80 normally stands retracted from the slot and engages the cam 77 and its adjacent stop 77*a* in the set position of the switch (Fig. 1). The pin 80 is slidable axially in alined bores 81, 82 in portions of the gears 65, 66.

An arcuate slot 83 in the plate 53 receives a portion of the slidable pin 80, the extent of the slot 83 being approximately a half circle (Figs. 5 and 13). A spring 84 tends to project the pin 80 into the slot 79. For that purpose, the spring is carried by the pin (Figs. 3 and 11), its respective ends bearing against the gear 66 and a boss 85 on the pin. Preferably, the pin 80 extends through an opening 87 in plate 54, and the adjacent end of the pin is reduced as shown at 86, to facilitate its withdrawal from opening 80 in the flange 89. The reduced end 86 of the pin normally projects into an opening 88 in the flange 89 of a sleeve 90 in the set position of the switch (Fig. 3).

The sleeve 90 is rotatably mounted on a stud 91 which is fixed to the plate 54. The rim of the flange 89 is recessed at 92 (Fig. 7) to receive a stop 93 which limits the extent of angular motion of the sleeve 90 by engagement of the stop with the ends of the recess. The stud 91 is headed to retain the sleeve and is slotted to receive one end of a spring 94 coiled around the sleeve. The other end of the spring 94 is hooked onto an insulating quadrant 95, to the opposite sides of which contact segments 96, 97 are secured. These segments are engageable with contacts 98, 99 and 100, 101, respectively, which are paired off on opposite sides of an insulating supporting member 102. The member 102 is rigid because it is attached to posts secured to the plate 54, but the quadrant 95 is movable because it is secured to the rotatable sleeve 90.

Contacts 98, 99 have attached wires of which 106, 107 may be regarded as belonging to an A-battery circuit. Similarly, contacts 100, 101 have attached wires 108, 109 which may be regarded as belonging to a B-battery circuit. The respective circuits are closable by the segments 96, 97, upon release of the wheel 71 from its set position, the subsequent engagement of contacts 59, 60 by the contactor 61 closing a relay circuit of which wires 110, 111 are to be regarded as parts.

The toothed rim of the wheel 71 is part of an escapement mechanism which slows the turning of the wheel in either direction when released from its set position (Fig. 1). The rim coacts with pins 103 projecting from a flutter weight 104 into the path of the teeth at equal distances from a pivot 105 on which the weight is journaled. This serves to insure that the switch will not be operated by shocks of short duration and also provides delayed arming after cessation of acceleration.

The operation of the device, briefly stated, comprises the clockwise turning of the toothed wheel 71 (arrow *a*, Fig. 1) from its set position (Fig. 1) in response to the inertia or setback of the weight 75 during the acceleration of the projectile. The toothed wheel turns sufficiently far in the clockwise direction in approximately 0.08 second of time after the initiation of the setback action to cause the release of the quadrant 95 and the consequent closure of the A and B-battery circuits. When acceleration has practically ceased, the toothed wheel 71 is turned in the opposite direction, that is, counter-clockwise (arrow *b*, Fig. 10), by the spring 73 until it reaches its ultimate position shown in Fig. 13. Immediately upon starting on its counter-clockwise turn (Fig. 10), the toothed wheel picks up the pin 80 which thereupon acts as a coupling between the wheel and the gears 65, 66, turning the latter counterclockwise (arrow *c*, Fig. 13), and propelling the slide 62 to its position of closing the plate circuit of a thyratron at the contacts 59, 60. The delay in time in closing the thyratron circuit by the slide 62 and its contactor 61 is a safety feature, since it minimizes the effect of transient voltages which appear across the thyratron grid circuit during the warming up of the filaments of the radio tube in the A and B-battery circuits.

In amplifying the preceding description, the details of the operation are given as follows: The set position of the switch shown in Fig. 1 is obtained by pushing the pin 80 inwardly against the tension of the spring 84 (to the right in Fig. 3) so that its point 86 engages the opening 88 in the flange 89 and holds the quadrant 95 (Fig. 9) in the circuit-opening position against the tension of the spring 94. The setting operations are done manually and require turning the wheel 71 clockwise (in Fig. 1) as far as it will go, and turning the quadrant 95 clockwise (in Fig. 9) as far as it will go.

When the device is first assembled, the blunt end of the pin 80 projects into the slot 79 under pressure of the spring 84, thus loose-coupling the pin and wheel 71. The relationship of the pin 80 and wheel 71 to each other at the start is as shown in Fig. 13, but the slide 62 is not necessarily in the position there shown. The quadrant 95 is turned to the position in Fig. 9 and held so as to keep the opening 88 in registration with the hole 87. The wheel 71 is then turned clockwise (Figs. 1 and 13), picking up the pin 80 at the left end of its slot 79 and moving

the pin through the 180° distance of the arcuate slot 83, until the pin is stopped by the bottom extremity of slot 83.

The pin 80 is then in line with the hole 87, and the point 86 is in registration with the opening 88. The wheel 71 is held while the pin 80 is pushed endwise to engage the point 86 in the opening 88 (Fig. 3). The pushing is done with a pointed instrument inserted in the slot 79 (Fig. 11), against the blunt end of the pin. As the operator releases the wheel 71, which tends to turn counter-clockwise (Fig. 1) by spring pressure, he allows the pointed instrument to glide off the blunt end of pin 80 as the wheel advances, the pin 80 presently catching the cam 77 (Fig. 3).

The clockwise turning of the wheel 71 which moves the pin 80 through the angle of 180° also moves the gears 65, 66 to the positions shown in Figs. 6 and 7, placing slide 62 in its starting position (Figs. 1, 3, 5, 6, 7 and 9) upon the gears. The pin 80 remains at the bottom of the slot 83 in the set position of the switch (Fig. 3), being held there by engagement of its reduced end portion in the hole 87. In this position, the blunt end of pin 80 rests upon cam 77. The wheel 71 is held in its set position (Figs. 1 and 5) by engagement of the stop 77*a* with the pin 80. The three electrical circuits are now open, the A-battery circuit being open at contacts 98, 99 (Fig. 9), the B-battery circuit at contacts 100, 101, and the relay circuit at contacts 59, 60.

Assuming that the projectile carrying the switch has been fired, the inertia of the weight 75, which occupies a position below the axis of wheel 71 (Fig. 1), causes the wheel 71 to turn clockwise (arrow *a*, Fig. 1). In other words, the setback action initially turns the toothed wheel until it reaches the approximate position in Fig. 10, where it remains until acceleration of the projectile has practically ceased. While wheel 71 is turning under the influence of setback, its cam 77 drags across the blunt end of the pin 80 until the pin is alined with the opening 78 in the hub 76. Actuated by the spring 84, the pin is thereupon projected through opening 78 and into the slot 79 and is withdrawn from openings 87 and 88 (Fig. 11).

The quadrant 95 is then released and, under the influence of spring 94 (Fig. 9), snaps into the circuit-closing position (Fig. 12). The segments 95 and 96 bridge the contact pairs 98, 99 and 100, 101, respectively, closing the A and B-battery circuits. After acceleration has ceased, the counter-clockwise turning of wheel 71 (arrow *b*, Fig. 10) under the influence of spring 73, is impeded only by the escapement mechanism. As soon as the left end of the slot 79 (Fig. 10) catches up with the pin 80, the pin and the gear 65, 66 are carried around in the counter-clockwise direction (arrow *c*, Fig. 13) by spring 73, moving the slide 62 downwardly and finally bridging contacts 59, 60 with its contactor 61. This closes the thyratron circuit including detonator 47.

Only sustained acceleration can move the weight 75 from the set position of the switch (Fig. 1) to the required position (Fig. 10) to release the primary switch 96–101. A sudden shock will not suffice, due to the delaying effect of the escapement, nor can a succession of shocks become sufficiently cumulative to actuate the weight 75 to its tripping position. The spring 73 will reengage the stop 77*a* with the pin 80 after each shock. Thus, the switch will not operate unless both the degree of acceleration and duration of its application are sufficient, and will reset to its initial position if the degree and duration of the acceleration are not sufficient.

The closure of the A and B-battery circuits occurs during the acceleration of the projectile, but final arming is delayed a definite interval after the end of acceleration. This interval is governed by the escapement 71, 103, 104 and the strength of the spring 73. The rapidity with which the slide 62 traverses the distance between its set and circuit-closing positions (Figs. 1 and 13) determines the amount of delay in closing the thyratron-detonator circuit and in placing the detonator 47 in communication with the tetryl 25 through the hole 67.

Referring to Fig. 15, I have shown a safety key 113 for preventing the slide 62 from arming completely and which locks the mechanism so that the key cannot be withdrawn unless the switches are in open circuit condition. The key has a lug 114 near one end, the lug being cut away to provide a reduced portion 114*a*. A second lug 115 is disposed on the key in alignment with the lug 114 and separated from the reduced portion 114*a* by a space substantially the width of the plate thickness 57. At its opposite end, the key has a handle 116 which engages one end of a spring 117 coiled around the key, the other end of the spring normally engaging the disk 51 so as to urge the key outwardly from the switch. The key 113 is inserted through key holes 118 in disk 51 and plate 56 and through a key hole 119 in plate 57, the hole 119 being similar to the holes 118 except that it has an additional slot 119*a* somewhat smaller than the lug 114.

The key 113 is inserted through the holes 118 and 119 and pressed against spring 117 until lug 114, 114*a* just clears the lower slot in hole 119. The key is then turned until the lug 114 is aligned with the upper slot 119*a*, whereupon the spring 117 moves the key outwardly to place the reduced lug portion 114*a* in slot 119*a*, further outward movement of the key being prevented by the adjacent larger portion of lug 114. The key is now in its locking position wherein it lies in the path of movement of slide 62 and prevents the slide from moving downwardly (Fig. 15) to its armed position. The slide 62 may be provided at its lower end with a recess 120 so that if the switch is accidently tripped, the movement of the slide is arrested by the key lug 114 entering the recess 120, whereby the key is held against rotation to its withdrawing position by the walls of the recess 120. Thus, before the key can be withdrawn it is necessary to reset the slide 62. The key handle 116 prevents the switch from being plugged into the fuze assembly as long as the key is in the switch. However, when the slide 62 is properly set, the key 113 may be pushed inwardly to remove lug 114*a* from slot 119*a* and then rotated and withdrawn so as to permit insertion of the switch into the fuze assembly.

The invention herein described may be manufactured and used by or for the Government of the United States of America for governmental purposes without the payment of any royalties thereon or therefor.

I claim:

1. In an inertia arming device having an electrical detonator and a powder train from the detonator, a slide interrupting the powder train, means operative upon substantial cessation of acceleration to displace the slide from its interrupting position, thereby to establish continuity of the powder train, a normally open safety switch in circuit with the detonator, and means controlled by the slide for closing the switch to arm the detonator upon movement of the slide to its displaced position.

2. In a safety switch for an explosive projectile, a frame having a detonator tube, spring clips on the frame, said clips having ends tensioned toward one end of the tube, in which tube a detonator is adapted to be held by said clip ends, and a slide mounted on the frame to close the other end of the tube and thereby confine the detonator.

3. An inertia arming device comprising an electrical detonator, a powder train leading from the detonator, a safety slide normally interrupting the powder train, a rack on the slide, a gear engaging the rack and normally holding the slide in its safe position, an actuating member movable by inertia, a switch element biased toward one position, latching means normally locking said element in a second position and held in its locking position by the actuating member, said member being movable in one direction by inertia to release the latching means, a device operable upon release of the latching means to

move the latching means for releasing the switch element and coupling the gear to the actuating member, and means operable upon substantial termination of the inertia force to move the actuating member in the opposite direction and thereby move the slide through said gear to an armed position.

References Cited in the file of this patent

UNITED STATES PATENTS

1,897,863	Ruhlemann	Feb. 14, 1933
2,030,085	Woodberry	Feb. 11, 1936