United States Patent [19]

Andersen

[11] **Patent Number: Des. 303,149**

[45] **Date of Patent: ** Aug. 29, 1989**

[54] **ANALYSIS PLATE WITH MATCHING LID FOR BIOLOGICAL PURPOSES**

[75] Inventor: **Verner B. Andersen,** Roskilde, Denmark

[73] Assignee: **A/S Nunc,** Roskilde, Denmark

[**] Term: **14 Years**

[21] Appl. No.: **889,916**

[22] Filed: **Jul. 28, 1986**

[30] **Foreign Application Priority Data**

Apr. 11, 1986 [DE] Fed. Rep. of Germany ..... URA 476/86

[52] **U.S. Cl.** **D24/31**

[58] **Field of Search** D24/31; 422/102, 99; 435/293, 296, 301; 436/515, 529, 809; 356/244; 206/562, 564, 569

[56] **References Cited**

U.S. PATENT DOCUMENTS

3,649,464	3/1972	Freeman	422/99 X
3,932,141	1/1976	Beau et al.	422/102
4,246,339	1/1981	Cole et al.	422/102 X

Primary Examiner—Wallace R. Burke
Assistant Examiner—Stella M. Reid
Attorney, Agent, or Firm—Watson, Cole, Grindle & Watson

[57] **CLAIM**

The ornamental design for an analysis plate with matching lid for biological purposes, as shown and described.

DESCRIPTION

FIG. **1** is an exploded perspective top view of an analysis plate with matching lid for biological purposes, showing my new design,
FIG. **2** is a perspective top view of the analysis plate portion thereof,
FIG. **3** is a top plan view of the analysis plate portion,
FIG. **4** is a bottom plan view of the analysis plate portion,
FIG. **5** is an elevational view of one side of the analysis plate portion,
FIG. **6** is an elevational view of the opposite side of the analysis plate portion,
FIG. **7** is an elevational view of one end of the analysis plate portion,
FIG. **8** is an elevational view of the opposite end of the analysis plate portion,
FIG. **9** is an enlarged sectional view of the analysis plate portion as seen along line **8—8** in FIG. **3,**
FIG. **10** is a perspective top view of the matching lid portion thereof,
FIG. **11** is an elevational view of one of the matching lid portion,
FIG. **12** is an elevational view of the opposite end of the matching lid portion,
FIG. **13** is an elevational view of one side of the matching lid portion,
FIG. **14** is an elevational view of the opposite side of the matching lid portion,
FIG. **15** is a top plan view of the matching lid portion,
FIG. **16** is a bottom plan view of the matching lid portion.

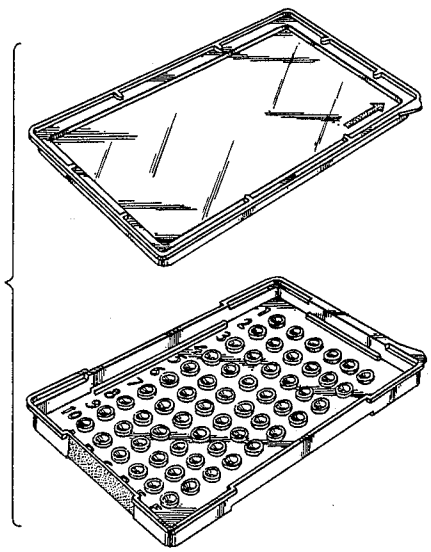

FIG. 1

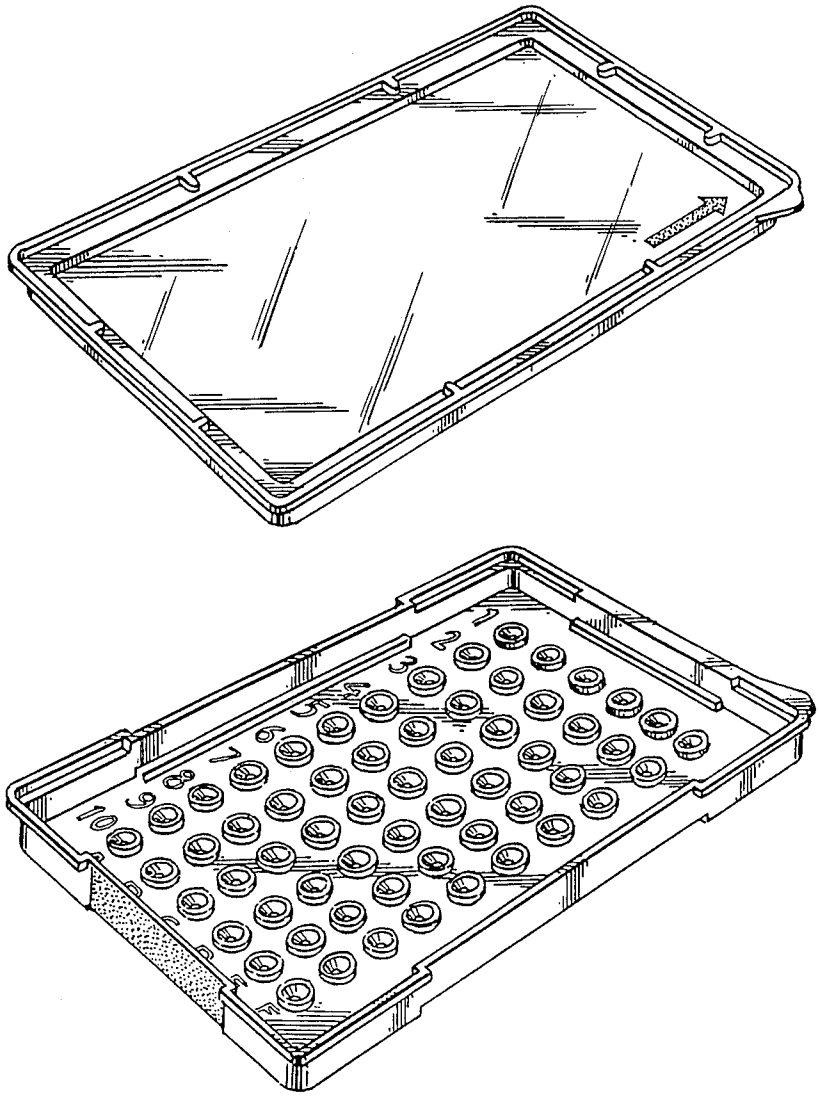

FIG. 2

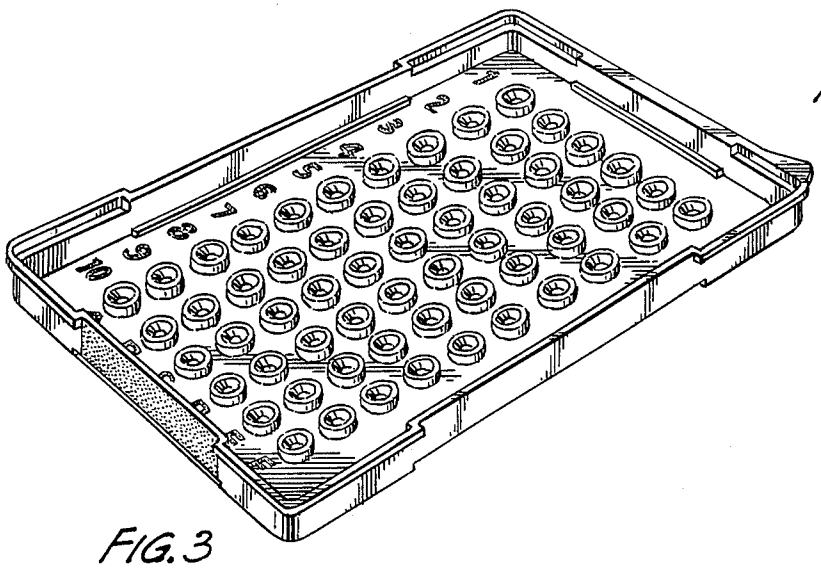

FIG. 3

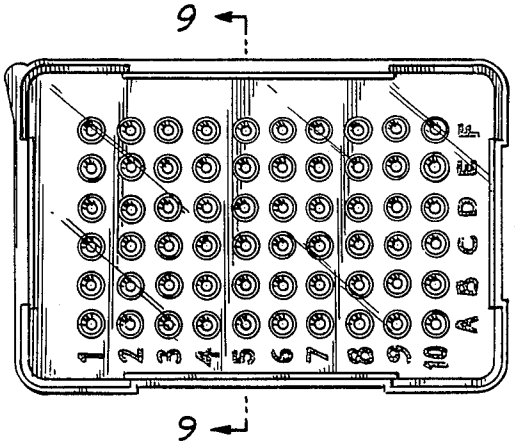

FIG. 4

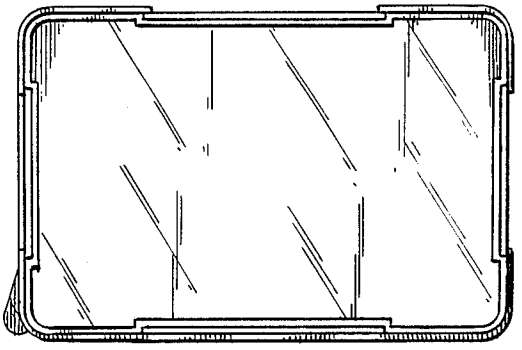

FIG. 5

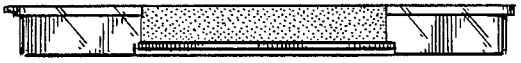

FIG. 6

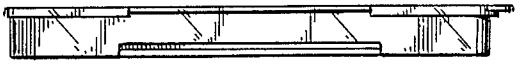

FIG. 7

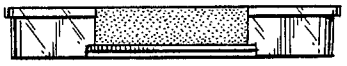

FIG. 8

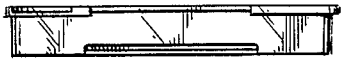

FIG. 9

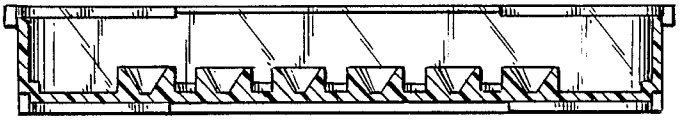

FIG. 10

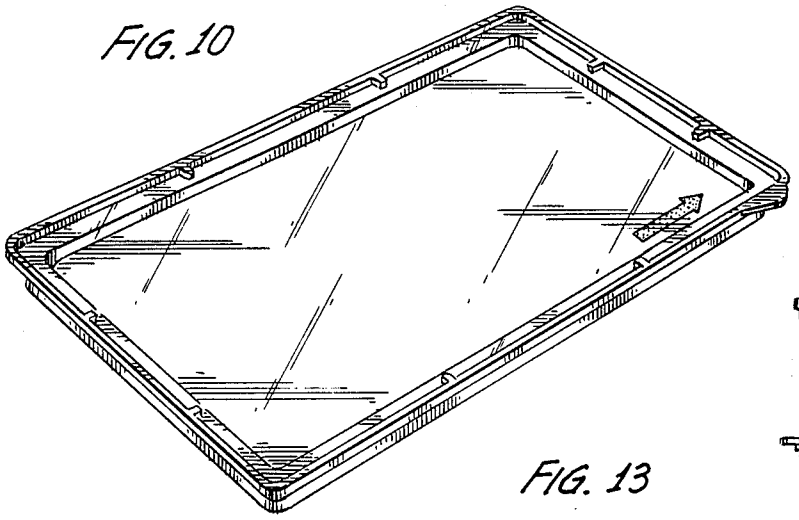

FIG. 11

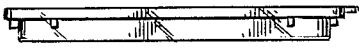

FIG. 12

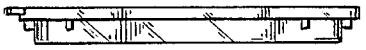

FIG. 13

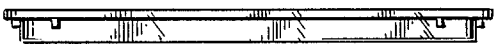

FIG. 14

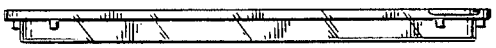

FIG. 15

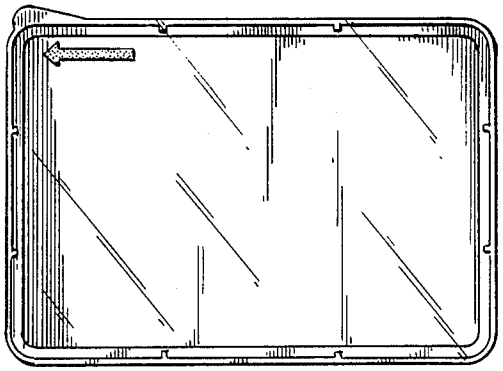

FIG. 16

