Oct. 19, 1948. W. E. ZIMMERMANN 2,451,463

TOOL FOR CUTTING INSULATION AND STRIPPING IT FROM WIRES

Filed April 12, 1947

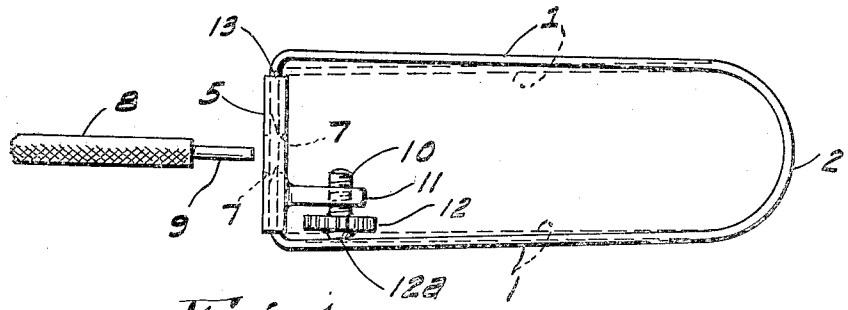

Fig. 1.

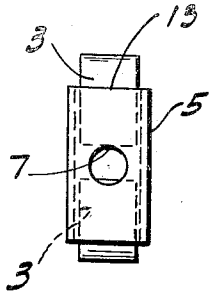

Fig. 2.

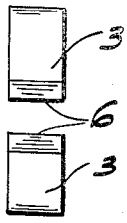

Fig. 3.

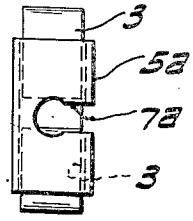

Fig. 4.

WALDEMAR E. ZIMMERMANN,
INVENTOR.

BY
Albert H. Merrill
ATTORNEY.

Patented Oct. 19, 1948

2,451,463

UNITED STATES PATENT OFFICE

2,451,463

TOOL FOR CUTTING INSULATION AND STRIPPING IT FROM WIRES

Waldemar E. Zimmermann, Los Angeles, Calif.

Application April 12, 1947, Serial No. 741,095

5 Claims. (Cl. 81—9.5)

1

This invention relates to a tool for cutting insulation and stripping it from wires.

Among the objects of the invention are: to provide a tool of the kind stated wherein the operator may regulate, in a more convenient and precise manner, the extent of the cutting movement so as completely to cut through the insulating sheath without marring or injuring the wire which it surrounds; to simplify the construction of the tool, thereby reducing cost of manufacture and lengthening usability; and to provide a tool which may be operated in a more rapid manner for the intended purpose.

Other objects, advantages and features of invention will hereinafter appear.

Referring to the accompanying drawing, which illustrates preferred embodiments of the invention,

Fig. 1 is a side elevation of the complete tool, illustrating also its operative relation to a partly sheathed wire.

Fig. 2 is a left end elevation of the tool shown in Fig. 1.

Fig. 3 is a reproduction of Fig. 2 except that the arm-connecting arcuate end and the sleeve which guides the wire to be operated upon and carries the adjustable screw are omitted.

Fig. 4 is a reproduction of Fig. 2 in a modified form.

Referring in detail to the drawing, the device comprises the pair of manually grippable strap metal arms 1 integrally united at one end in a resilient manner by the arcuate run 2, said arms having their opposite free end portions 3 directed toward and substantially alined with each other, so as to have loosely fitted around them a flattened sheet metal sleeve 5. Said arm portions 3 terminate in cooperating cutting edges 6, and said sleeve 5 is provided in its sides with alined apertures 7 to receive the sheathed portion 8 of a wire 9 for the cutters to cut through and around said sheath preparatory to it being stripped off from the end portion of the wire by the tool.

An adjusting screw 10 is carried by a mounting arm 11 which projects internally of the tool from one end portion of the sleeve 5. Said screw extends transversely through said arm 11, has a screwthreaded engagement therewith and is furnished with a milled operating head 12. The screw 10 carried by the floating sleeve 5 may be so adjusted as to regulate the depths that the knife edges 6, 6 can cut, so that they will just cut through the sheath 8 of the wire 9. The inspringing of the arms 1 of the manually grippable tool is stopped at one side by the end 13 of the floating

2

sleeve 5 and at the opposite side by the boss 12a on the adjusting screw 10. The wire is inserted the desired distance through the hole 7 and then the workman, after springing the knife edges 6 in to forcible contact with the sheath 8, gives the tool a twisting movement, thereby cutting through the sheath, just down to the wire if the proper adjustment has been made, the part of the sheath beyond the cut then being stripped off by pulling thereon with the tool before the workman releases his grip upon the arms 1. It will be seen that the arms 1 form side portions of an elongated loop which is conveniently gripped by one hand of the workman while he uses his other hand to put the wire 9 into a position for being operated upon.

In Fig. 4 is shown a modification wherein, instead of apertures 7 surrounded by imperforate portions of the sleeve 5, cut-outs 7a are provided which open out at the side of the sleeve 5a and enable the operator more quickly to place the wire into position to be operated upon.

I claim:

1. In a tool for cutting insulation and stripping it from wires, a pair of manually grippable arms resiliently united at one end so as to tend to spring apart, each of said arms having a free end portion which is directed toward and substantially alines with the free end portion of the other arm, said free end portions terminating in cutting edges, an open-ended sleeve of rigid sheet material one end portion of which loosely surrounds one of said free end portions and forms a stop shoulder to arrest the inward movement of the latter, and the opposite end portion of which loosely surrounds the other of said free end portions, said sleeve having alined cutouts in its opposite sides to admit a sheathed wire between said cutting edges, and manually adjustable stop means carried by the last recited end portion of said sleeve and positioned to limit the movement of said cutting edges when forced toward each other by the compressive action of the hand of a person grasping the aforesaid pair of manually grippable arms.

2. The subject matter of claim 1, and said cutouts in said sleeve each consisting of an aperture surrounded by an intact sleeve portion.

3. In a tool for cutting insulation and stripping it from wires, a pair of manually grippable arms resiliently united at one end so as to tend to spring apart, each of said arms having a free end portion which is directed toward that of the other and which terminates in a cutting edge, a wire-holding means floatingly carried by said

free end portions of said arms to position a sheathed wire between said cutting edges, an arm carried by said wire holding means and projecting into the space between said manually grippable arms, and a manually adjustable screw threaded laterally through the arm carried by said wire holding means, said screw and wire holding means internally abutting the first recited arms to regulate the minimum space between said cutting edges.

4. The subject matter of claim 3, and said free end portion of said arms being of a strap-metal shape and said wire holding means consisting of a flattened sleeve fitted loosely around them.

5. A tool of the kind described comprising a pair of strap metal arms resiliently united at one end into a loop formation, each of said arms having a free end portion which is directed toward the end portion of the other in an alined manner and which terminates in a cutting edge, said loop being manually grippable to spring said arms toward each other, a flattened sleeve loosely surrounding said alined end portions, said sleeve having a cut-out in each side wall, said cut-outs being alined to provide a wire-admission passage,

a mounting means carried internally of said loop by one end portion of said sleeve, and a manually regulatable screw carried by said mounting means, the abutting of one end of said screw against one of said arms cooperating with the abutting with the other arm against that end portion of said sleeve which is farthest from said mounting means to regulate the minimum space between said cutting edges when said arms are manually sprung toward each other.

WALDEMAR E. ZIMMERMANN.

REFERENCES CITED

The following references are of record in the file of this patent:

UNITED STATES PATENTS

Number	Name	Date
1,490,459	Fergusson	Apr. 15, 1924
2,383,479	Gordon	Aug. 28, 1945

FOREIGN PATENTS

Number	Country	Date
332,906	Germany	July 23, 1919
740,874	France	Nov. 22, 1932