United States Patent [19]

Burtz

[11] **3,861,521**

[45] **Jan. 21, 1975**

[54] **DISPOSABLE SUTURE ORGANIZER**

[76] Inventor: **Mildred V. Burtz,** 1118 S. Rexford Dr., Apt. 5, Los Angeles, Calif. 90035

[22] Filed: **Apr. 17, 1973**

[21] Appl. No.: **351,870**

[52] **U.S. Cl.**..... **206/63.3,** 206/363, 206/370, 206/813, 206/818, 128/335.5, 229/56, 335/303

[51] **Int. Cl.**..... **A61b 19/02,** B65d 31/12

[58] **Field of Search**..... 206/63.3, 370, 363–365, 206/438, 439, 818, 813; 335/303; 229/56; 128/335.5

[56] **References Cited**

UNITED STATES PATENTS

59,095	10/1866	Totten	206/350
1,387,839	8/1921	Davis	206/370
2,888,136	5/1959	Borde	206/350
3,075,639	1/1963	Lingley	206/366
3,483,494	12/1969	Cromie	206/818
3,654,059	4/1972	Zisblatt	206/813
3,655,036	4/1972	Corelli et al.	206/813
3,727,658	4/1973	Eldridge, Jr.	206/818
3,759,376	9/1973	Lisowski	206/63.3

Primary Examiner—William I. Price
Assistant Examiner—Joseph Man- Fu Moy
Attorney, Agent, or Firm—Lindenberg, Freilich, Wasserman, Rosen & Fernandez

[57] **ABSTRACT**

A disposable suture package and needle organizer consists of a unitary structure which forms a plurality of pockets, each large enough to accommodate a stack of suture packages of a different type and size. The top side of each pocket is transparent so that the suture type and size in the pocket is visible through the pocket top side. Forming part of the organizer are a plurality of magnetic bars preferably arranged in parallel spaced apart pairs. The magnetic bars are used to attract and hold the suture needles after their use in the operation. The pockets enable the various suture types and sizes to be continually segregated prior to and during the operation to avoid package mix-up, and enable speedy location of each suture type and/or size, as well as to expedite and simplify the needle count when required.

10 Claims, 3 Drawing Figures

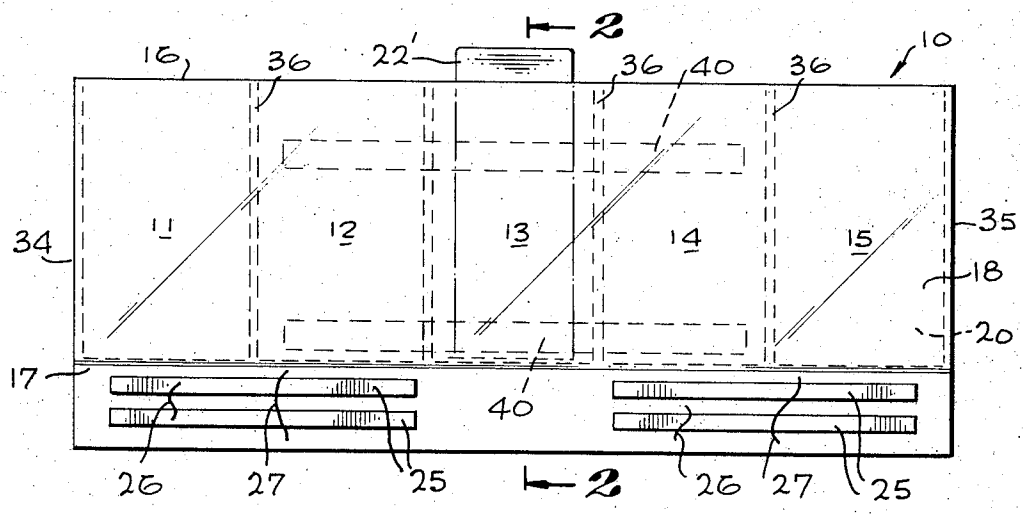

Fig. 1

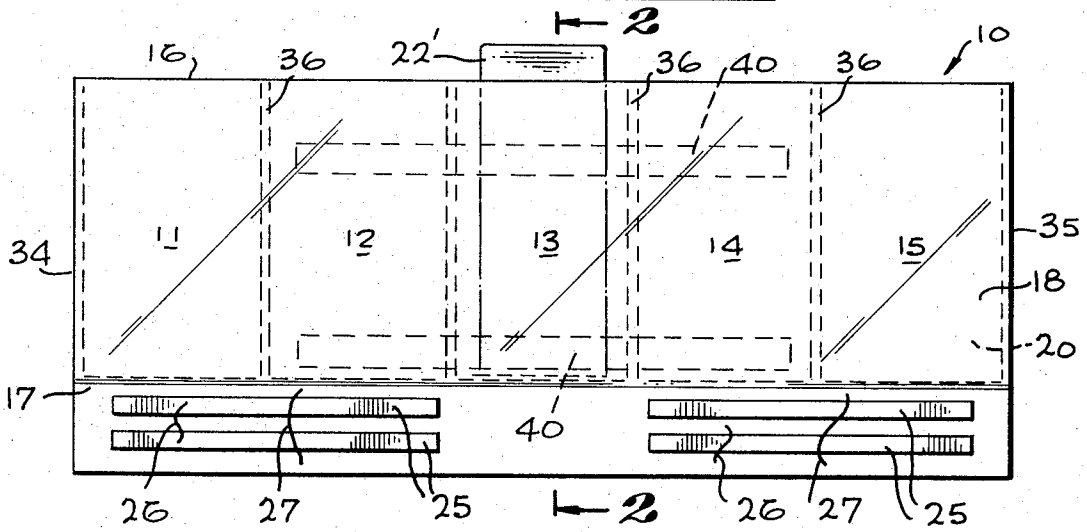

Fig. 3

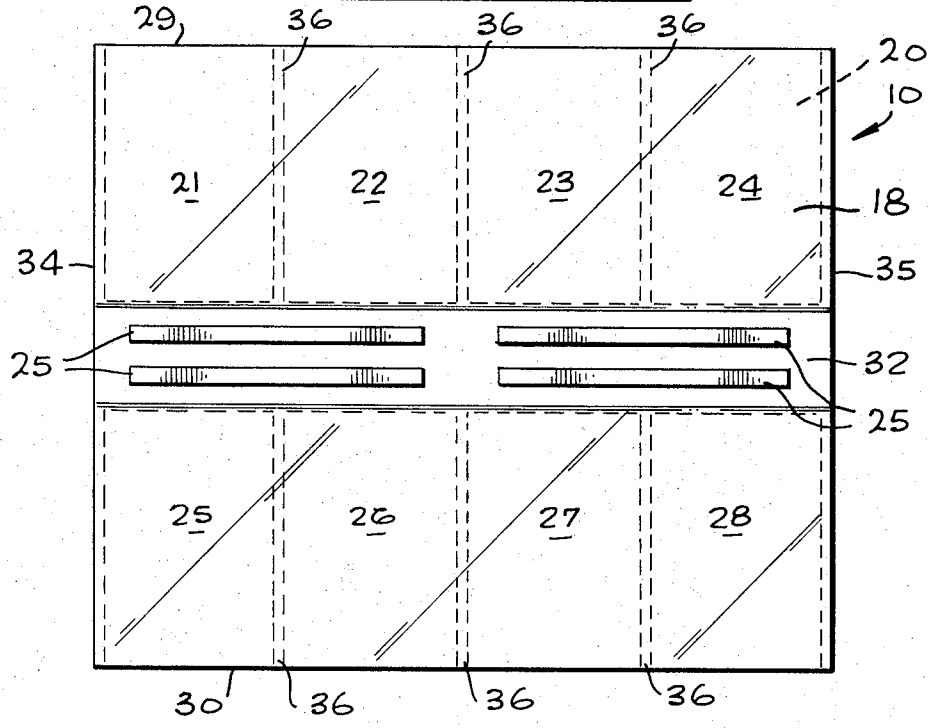

Fig. 2

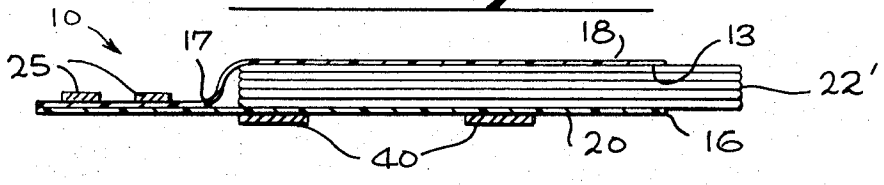

DISPOSABLE SUTURE ORGANIZER

BACKGROUND OF THE INVENTION

1. Field of the Invention

The present invention is generally directed to a surgical aid device and more particularly, to a suture package and needle organizer.

2. Description of the Prior Art

Those familiar with surgical procedures are well aware of the large number of types and sizes of sutures which are available for modern surgery. The different sutures are individually packaged with one or two needles per package, depending on the particular suture type and size. In any operation of any degree of complexity, a large number of different suture types and sizes are used. One of the tasks of the nurse in charge of the sutures, generally known as the instrument nurse, is to ready each type of suture for the surgeon as well as to receive used suture needles from him.

Before the operation can be completed, and the incision closed, the nurse must conduct one or more needle counts, to insure that all the used needles have been received by the nurse. Basically, in performing the needle count the nurse adds the number of used needles to those in the unused packages and the sum must equal the total number of needles recorded on a needle count board. Before the operation begins, the instrument nurse receives from the circulating nurse a large number of suture packages and the number of needles in them is entered on the needle count board. If during the surgery additional packages are needed, they are provided by the circulating nurse and the number of needles in the additional packages is added to the needle count on the board.

Despite the many advances in surgical procedures, the manner in which the suture packages are organized prior to surgery, handled during surgery and the way in which nurses keep the used needles needed for the needle count is quite crude. Typically, closed suture packages are piled up on the nurse's instrument table prior to the operation in a disorganized manner. Each nurse must resort to her ingenuity to organize the packages and keep them organized during surgery to enable her to prepare speedily each type of suture for use by the surgeon. Most of the self-conceived techniques are quite unsatisfactory.

Generally, the instrument nurse arranges the packages in separate loose stacks according to type and size along the edge of the instrument table. However, during the operation, the loosely stacked packages tend to get mixed up, thereby complicating the duties of the instrument nurse to locate the proper suture package. Also, the disorganized packages make it difficult for the circulating nurse to determine the type and size of additional sutures which may be needed during the surgery. Quite often, one or more suture packages fall off the table unnoticably. Consequently, during the needle count, the nurses must search and locate them to arrive at the correct needle count.

As to the used needles which the surgeon hands the nurse, typically, the nurse attaches each of them to a towel. Since most of the needles are very small, the task of accurately counting all the needles on the towel is time consuming and therefore may increase the operation time. Recently, a pad with magnetic bars has become available. The limited function of the bars is to magnetically attract the used needles and secure them in place for the needle count. However, no aid is presently available to assist the nurse in organizing the suture packages prior to surgery and keep them organized during surgery as well as to hold the used needles for the needle count.

OBJECTS AND SUMMARY OF THE INVENTION

It is a primary object of the present invention to provide a simple and inexpensive device to simplify the tasks of the nurse in charge of sutures prior to and during surgery.

Another object of the invention is to provide a simple and inexpensive suture-organizer with which the various suture packages to be used during surgery can be easily organized and to which used needles are attachable to facilitate the needle count.

These and other objects of the invention are achieved by providing a sterilizable unitary structure, hereafter referred to as the organizer, which forms a plurality of side-by-side pockets. Each pocket is large enough to hold several suture packages stacked on top of one another. The top sides of all the pockets are transparent so that the top package in each pocket is visible through the pocket's top side. Preferably, the packages in each pocket are of the same suture size and type, so that during the operation the nurse can easily and speedily locate the needed suture. As the sutures are used up, the pockets are easily reloadable with additional packages. The pockets are arranged so that their open ends are preferably along one or more parallel lines to facilitate access to any of the pockets for package loading or removal. Forming part of the organizer and attached to its top surface are means to which the nurse can easily attach any used needle received from the surgeon. Preferably, such means comprise magnetic bars. The organizer is formed from foldable plastic material, with the bars attached thereon so that the entire structure can be folded to reduce its overall size for shipment and storage purposes. Peel-away tape or any other means are attached to the back of the organizer in order to secure it on top of the instrument table for use during the operation.

The novel features of the invention are set forth with particularity in the appended claims. The invention will best be understood from the following description when read in conjunction with the accompanying drawings.

BRIEF DESCRIPTION OF THE DRAWINGS

FIG. **1** is a top view of one embodiment of the organizer of the present invention;

FIG. **2** is a cross-sectional view along lines **2—2** in FIG. **1**; and

FIG. **3** is a top view of another embodiment of the invention.

DETAILED DESCRIPTION OF THE PREFERRED EMBODIMENTS

Attention is now directed to FIG. **1** wherein numeral **10** designates the novel suture organizer of the present invention. It consists of a unitary foldable structure which forms a plurality of pockets, which for explanatory purposes are limited to five and are designated by numerals **11–15.** The open ends of all the pockets are shown aligned along a line **16** which forms the top edge of the organizer, while the bottoms of the pockets are

along the bottom edge **17** of the organizer. The top sides **18** of all the pockets are transparent so that the content of each pocket is visible from the outside. The bottom side of each pocket is designated by numeral **20.**

The function of each pocket of the organizer such as pocket **13** shown in cross-section in FIG. **2** is to contain a stack of suture packages **22'**, with the top package in each pocket being visible through the transparent top side **18.** Preferably, before the operation, each pocket is loaded with suture packages of the same type and size. The pockets may be of different widths to accommodate different size suture packages.

As seen from FIG. **1,** in addition to the pockets, the organizer also includes a plurality of strips of material **25** shown disposed along the bottom edge of the organizer. These strips are used by the nurse to attach thereto the needles used by the surgeon. Preferably, strips **25** consist of magnetic bars to which needles can be temporarily yet securely attached until they are counted during the needle count and thereafter disposed of. Strips **25,** however, are not intended to be limited to magnetic bars but rather may be formed of any material to which needles can be attached. For example, strips **25** may consist of cloth or towel-like material, magnetic tape, or masking tape, to mention but a few appropriate materials. When magnetic bars (or other means) are employed as strips **25,** it is preferable to arrange them in pairs, with each pair consisting of spaced apart bars parallel to one another, as shown in FIG. **1.** Single bars may be used to attach small needles **26** while larger needles **27** can be held in place by placing them on the parallel bars so that each larger needle is partially attracted by each of the two parallel bars. The arrangement of the magnetic bars in parallel pairs is believed to decrease the likelihood of accidental disengagement of any used needles from the bars, once the needle is attached to the bars by magnetic attraction.

In another embodiment of the invention, shown in FIG. **3,** the organizer **10** is shown consisting of two rows of back-to-back pockets **21–28,** where the open ends of pockets **21–24** are aligned along the organizer's top edge **29** and those of pockets **25–28** are aligned along the organizer's bottom edge **30.** The bottoms of the pockets in the two rows are spaced apart from one another and the space, designated by numeral **32,** is partially occupied by the bars **25.**

Either embodiment of the organizer **10** can be easily formed from two sheets of plastic material designated by numerals **18** and **20** which respectively form the top and bottom sides of the pockets. At least top sheet **18** has to be transparent. The pockets may be formed by heat sealing the top sheet **18** to the bottom sheet **20** along the bottom edge **17** in the embodiment of FIG. **1** or along the space **32** in FIG. **3,** as well as along organizer ends **34** and **35** and the pocket dividers **36.** Any conventional means such as an appropriate glue may be used to permanently attach the bars **25** to the organizer **10,** to form an integral part thereof.

Since the parts forming the organizer are inexpensive, the entire organizer is disposable, thereby conforming to the present trend of using disposable devices in surgeries. It is apparent that the entire organizer must be sterilizable. Preferably, the organizer is fabricated of foldable material to reduce its size for shipping and storage purposes.

To be used, the sterilized organizer is removed from the sterilized container (not shown) in which it is received, is unfolded and placed on the instrument table. Preferably, one or more strips of peel-away tape **40** (see FIG. **2**) are attached to the bottom side of the organizer to secure the organizer to the table. In the embodiment of FIG. **3,** the tape is preferably located under bars **25** so that the central portion of the organizer is secured to the table. Similarly, in the embodiment shown in FIGS. **1** and **2,** one of the strips of tape **40** should be under the bars **25,** and preferably extend the entire length of the organizer. The positions and lengths of the strips of tape **40** in FIGS. **1** and **2** are shown to highlight their function and simplify the drawings rather than to limit them to the positions and lengths as shown.

Prior to the operation, the various pockets are loaded with the various types and sizes of the suture packages. Each pocket is used to hold a stack of packages of a particular type and size. Preferably, adjacent pockets can be used to hold different sizes of the same suture type. Since the top side of each pocket is transparent, the nurse can easily locate the needed suture by merely glancing at the organizer. Since the stacks are separated in the various pockets, they cannot get mixed up during the surgery. Also, the organizer eliminates the likelihood of any package falling off the table accidentally. Since the sutures are segregated by type and size by the organizer, it is very easy for either the instrument nurse or the circulating nurse to determine during the operation the types and sizes of the sutures which are being depleted and must be augmented.

Since the bars holding the used needles are part of the organizer, the needle count is greatly simplified. The count is easily derived by adding the number of needles in the closed unused packages in the various pockets which are conveniently segregated to the number of used needles on the bars **25.**

As is known, quite often a differential needle count is required. In this count the needles of each suture type are counted separately. Such a count is greatly expedited with the use of the novel organizer. By placing the different sizes of the same type suture in adjacent pockets and attaching the used needle of the same type to the bars located adjacent these pockets, all the needles of each suture type are effectively segregated by the organizer so that they can be counted separately and accurately in a minimum of time which is of primary importance.

It is generally believed than an organizer with eight to ten pockets would be sufficient for many operations. If the number of types and sizes of sutures to be used in any operation is greater than the number of pockets in one organizer, two or more organizers can be placed side-by-side. The significant point to consider is that for each type and size of a suture to be used in the operation, a separate pocket can be provided, so that all the sutures to be used are separated by type and size.

Another advantage of the novel organizer relates to its usefulness as a safe means for disposing of all used needles. Ordinarily, all used needles must be placed in some point-protecting wrapping and then disposed of in a designated place. It is very important that all used needles are carefully disposed of. A used needle may accidentally fall on the floor and unless accounted for and disposed, may interfere with a subsequent needle count. Also, it may become attached to a shoe of a

wearer and be accidentally carried into another operating room. These problems are eliminated when using the novel organizer of the present invention. Since all the needles are on top of it, they can be carefully disposed of by merely folding the organizer on top of them, thereby wrapping them, and thereafter placing the wrapped up organizer with the needles in the designated needle disposal place.

Although particular embodiments of the invention have been described and illustrated herein, it is recognized that modifications and variations may readily occur to those skilled in the art and consequently it is intended that the claims be interpreted to cover such modifications and equivalents.

What is claimed is:

1. A suture-package organizer for use in combination with suture packages, comprising:

a sterilizable unitary structure defining a plurality of pockets, each pocket having a permanently opened opening;

a plurality of individual closed suture packages of the type used in surgery, each package containing at least one needle enclosed therein, each pocket of said structure being adapted to hold therein at least one of said suture packages, each package being insertable in and removable from any of said pockets through the pocket's permanently opened opening; and

needle holding means connected to said structure for holding all the suture needles after their use in the surgery.

2. A suture-package organizer as recited in claim **1** wherein each pocket has a transparent top side whereby the top suture package contained in the pocket is visible through said top side, and wherein said needle holding means are connected along one side of said structure and the openings of at least some of said pockets are aligned along a line parallel to and spaced apart from said one side.

3. A suture-package organizer as recited in claim **1** wherein each pocket has a transparent top side whereby the top suture package contained in the pocket is visible through said top side, and wherein said structure includes a bottom side defining the bottom sides of said pockets, and said organizer further includes fastening means attached to said bottom side for securing said structure on a substantially flat support surface.

4. A suture-package organizer as recited in claim **1** wherein each pocket has a transparent top side whereby the top suture package contained in the pocket is visible through said top side, and wherein said needle holding means comprises magnetic means for holding needles placed thereon by magnetic attraction.

5. A suture-package organizer as recited in claim **4** wherein said structure is of a flexible foldable plastic material.

6. A suture-package organizer as recited in claim **5** wherein said magnetic means comprises a plurality of magnetic bars at least some of which are substantially aligned along one end of said structure near the bottoms of said pockets.

7. A suture-package organizer as recited in claim **4** wherein said magnetic means include at least one pair of parallel spaced apart magnetic bars, adapted to hold larger size needles with parts of each large size needle being attracted and held by each of the pair of parallel spaced apart bars.

8. A suture-package organizer as recited in claim **1** wherein each pocket has a transparent top side whereby the top suture package contained in the pocket is visible through said top side, and wherein said pockets are arranged in two separate groups, with the openings of the pockets in one group being aligned along a first edge of said structure and the openings of the pockets in the other group being aligned along a second edge of said structure opposite said first edge, and said needle holding means are connected to said structure between the bottom of the pockets in said two groups.

9. A suture-package organizer as recited in claim **1** wherein each pocket has a transparent top side whereby the top suture package contained in the pocket is visible through said top side, and wherein said needle holding means comprises magnetic bars for holding needles attached thereby by magnetic attraction.

10. A suture-package organizer as recited in claim **9** wherein said magnetic bars are arranged in pairs of spaced apart parallel bars extending parallel to and between said first and second edges of said structure.

* * * * *