United States Patent

Valantin

[15] **3,670,627**

[45] **June 20, 1972**

[54] DEVICE FOR DRIVING A SHAFT IN ROTATION

[72] Inventor: **Alfred Valantin,** Clermont, France

[73] Assignee: **Charbonnages De France,** Paris, France

[22] Filed: **Oct. 13, 1969**

[21] Appl. No.: **865,918**

[30] **Foreign Application Priority Data**

Oct. 15, 1968 France 68170022

[52] **U.S. Cl.** **91/167,** 92/121, 92/52

[51] **Int. Cl.** **F15b 11/18,** F01b 7/20, F01c 9/00

[58] **Field of Search** ..... 91/167, 167 A; 92/121

[56] **References Cited**

UNITED STATES PATENTS

3,279,329 10/1966 Floer 91/167

Primary Examiner—Martin P. Schwadron
Assistant Examiner—Clemens Schimikowski
Attorney—Karl W. Flocks

[57] **ABSTRACT**

A device for driving a shaft in rotation, of the kind comprising at least one set of two identical rotary jacks mounted on a common shaft, the annular space comprised between the cylindrical casing of each jack and the shaft coaxial with this latter being divided into two fluid-tight chambers of variable volume, separated on the one hand by a longitudinal abutment provided on the internal face of the said cylindrical casing, and on the other hand by a radial blade fixed longitudinally in the said shaft, the cylindrical casing of each jack being provided with a device for locking it with respect to a housing by which said casing is enclosed.

It comprises: a hydraulic circuit composed of two portions connected to a common tank; a first portion supplied by a main pump and a second portion supplied by a topping-up pump; the locking device of the cylindrical casing of one jack being constituted by a cylindrical housing enclosing the jack casing and comprising a fluid-tight annular chamber, in which the wall in contact with the outer surface of this same casing is a thin wall, the said annular chamber being connected by means of a three-way distributor with two positions, either to the said main pump or the the common tank.

6 Claims, 16 Drawing Figures

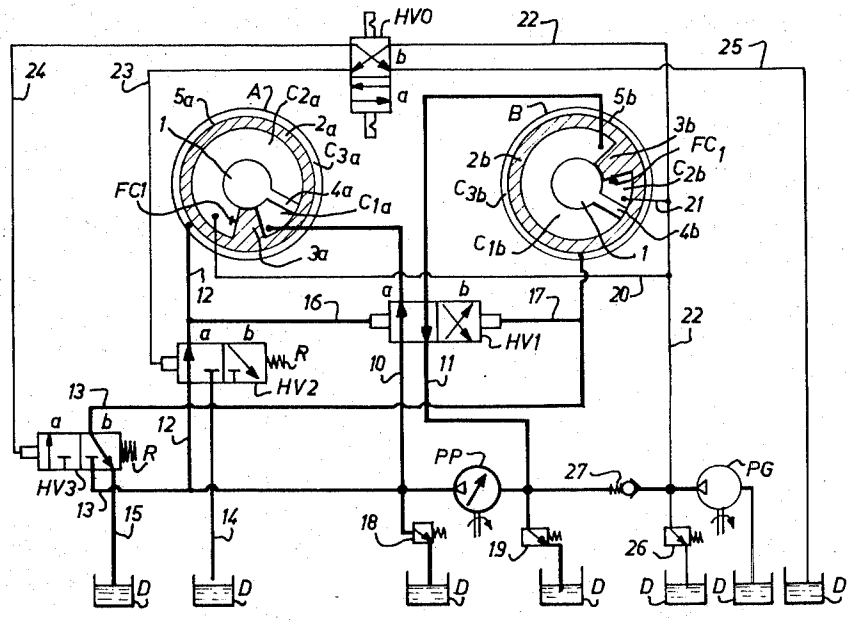

FIG. 1a

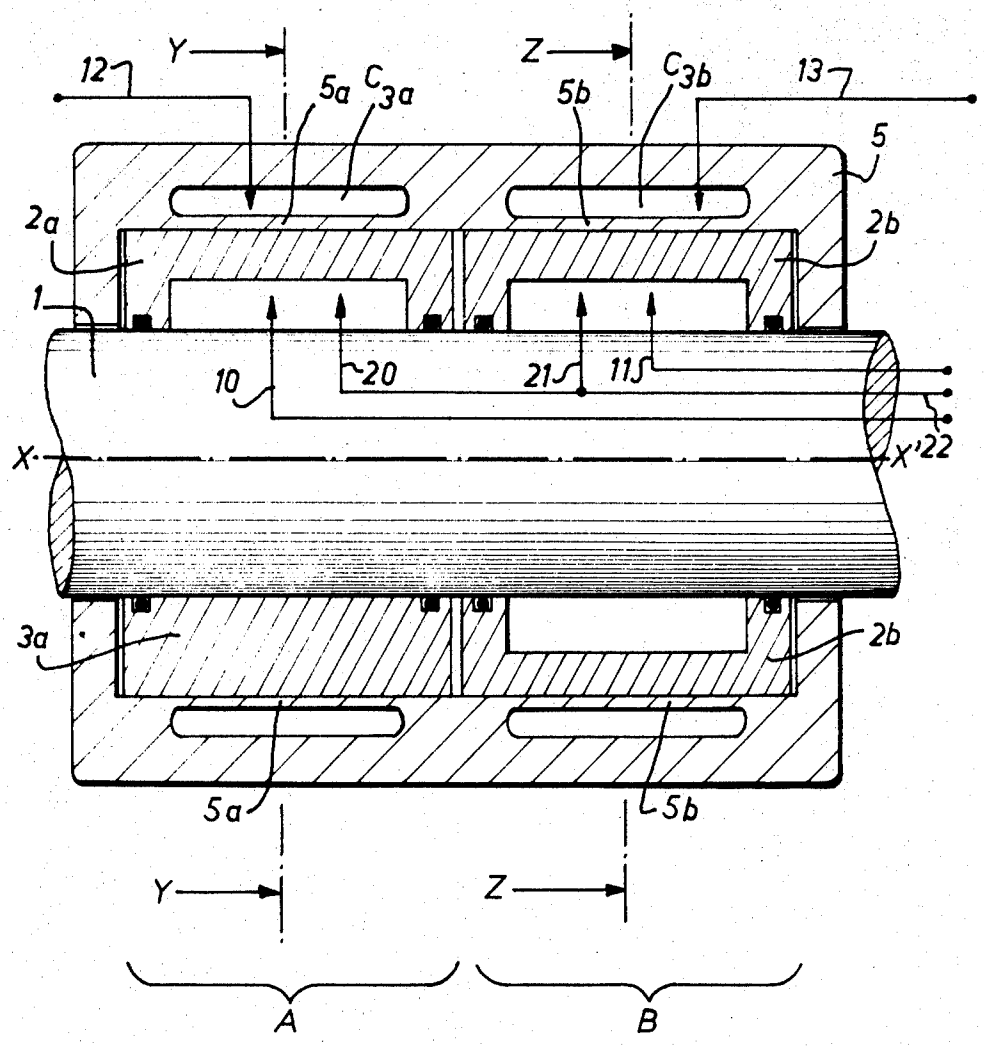

INVENTOR
ALFRED VALANTIN

BY KARL W FLOCKS

ATTORNEY

FIG. 1b

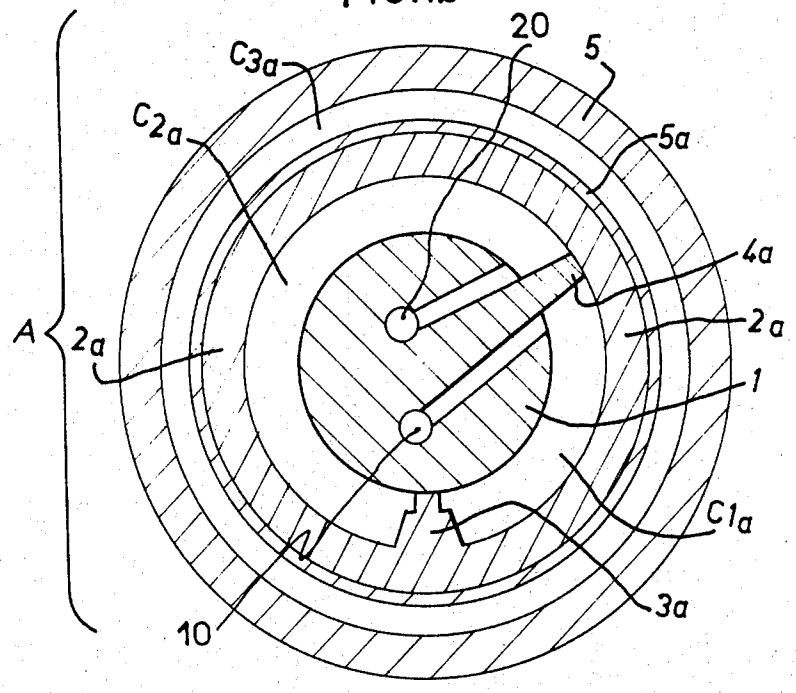
20
5
C3a
C2a
5a
4a
A
2a
2a
1
C1a
3a
10

FIG. 1c

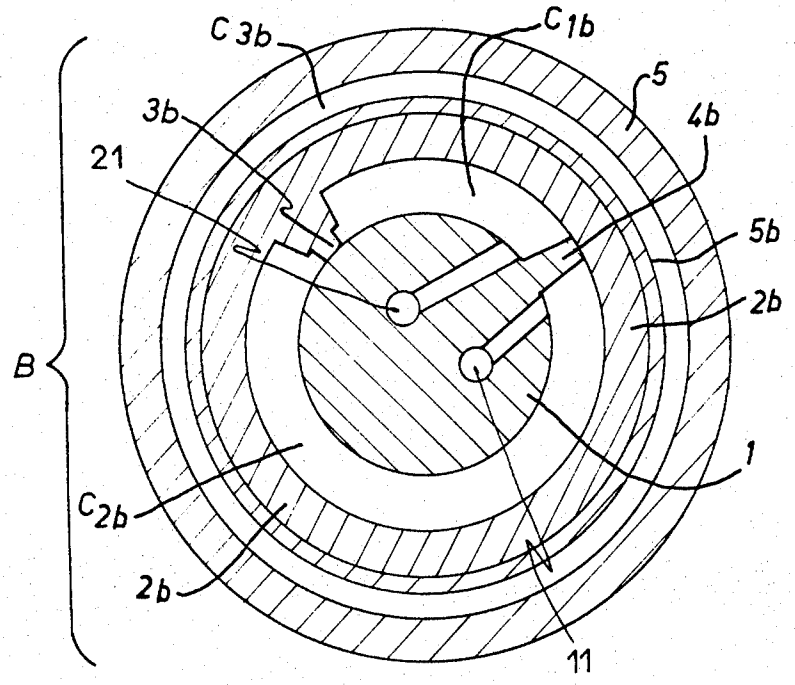
C 3b
C1b
5
3b
4b
21
5b
2b
B
1
C2b
2b
11

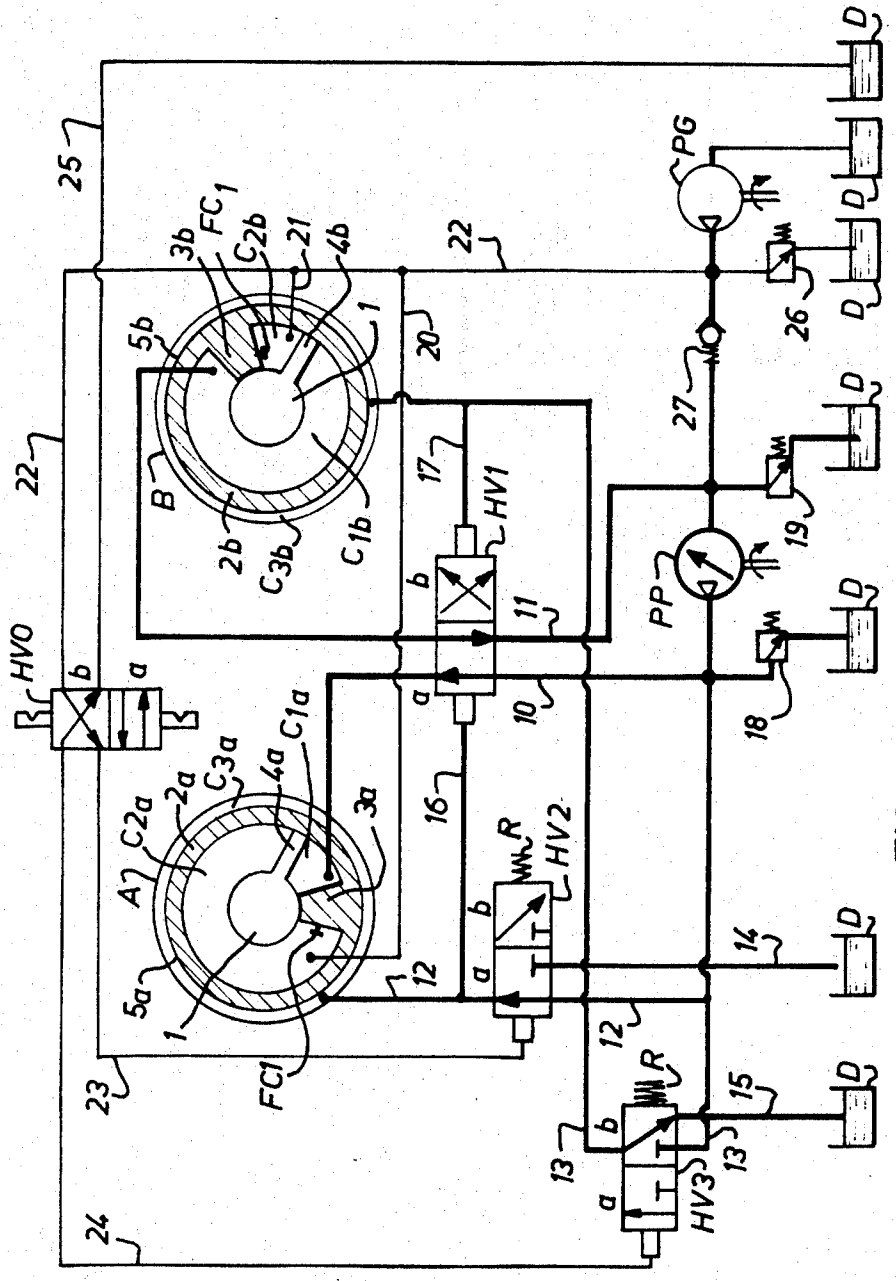

FIG. 2

FIG. 3a

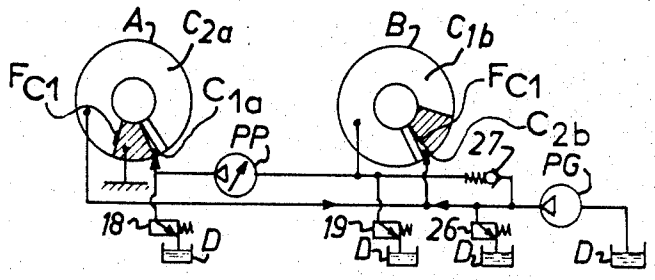

FIG. 3b

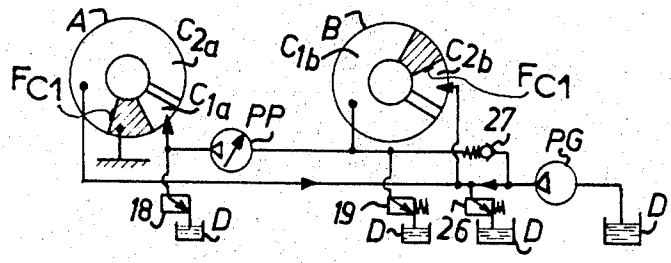

FIG. 3c

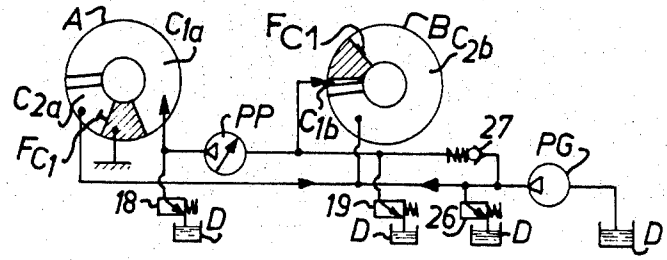

FIG. 3d

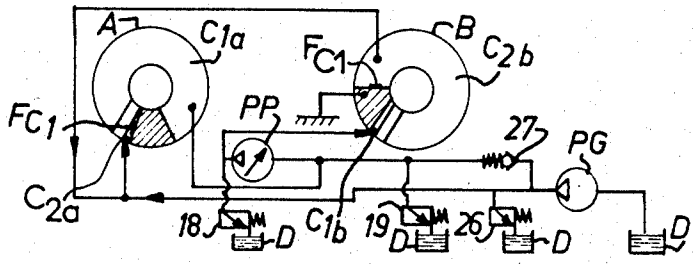

FIG. 3e

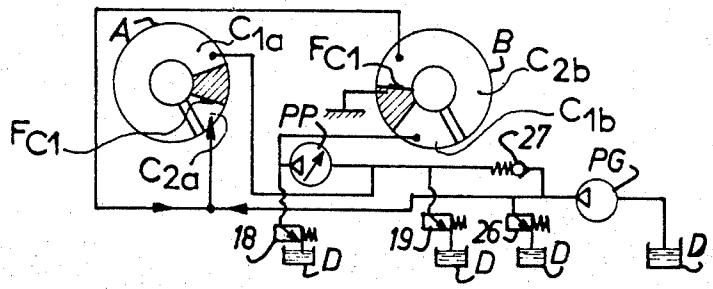

FIG. 4

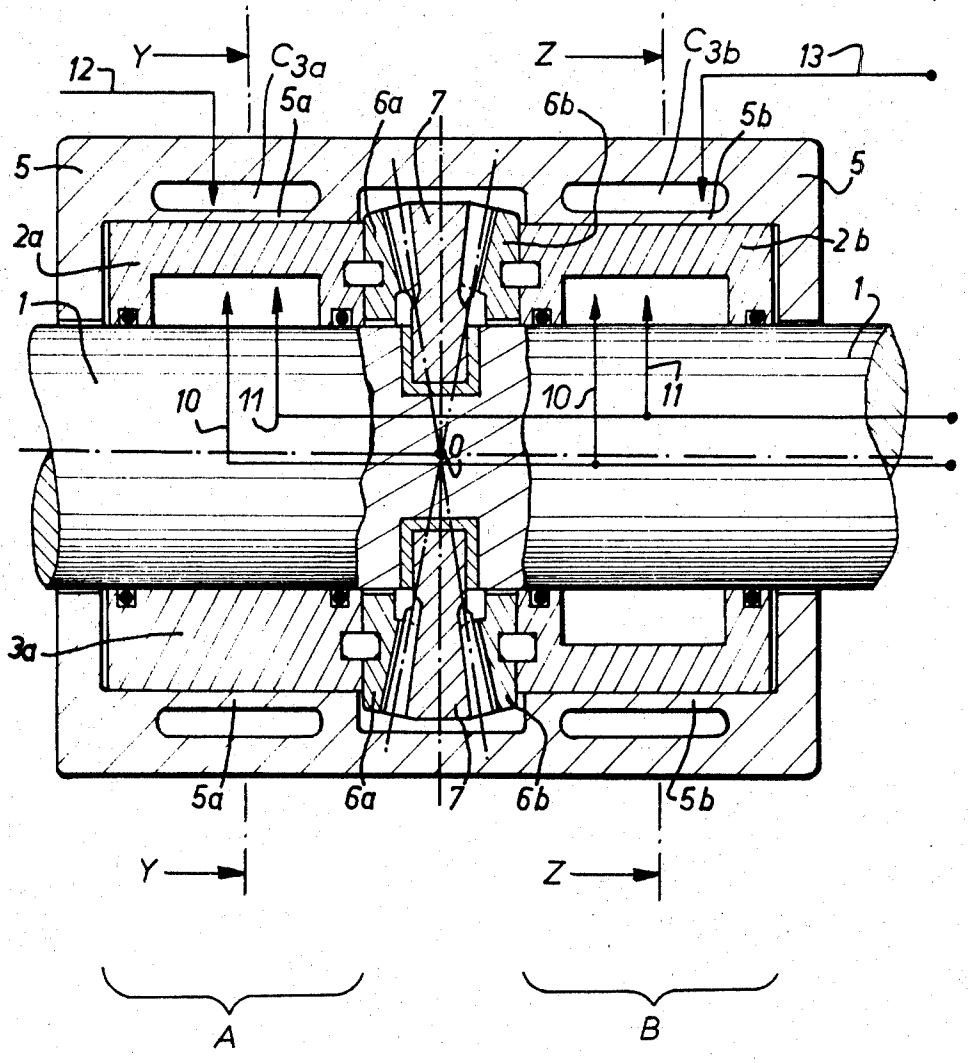
12
Y
C3a
5a
6a
7
6b
Z
C3b
13
5b
5
5
2a
2b
1
1
10
11
10
11
O
3a
5a
6a
7
6b
5b
Y
Z
A
B

FIG. 5

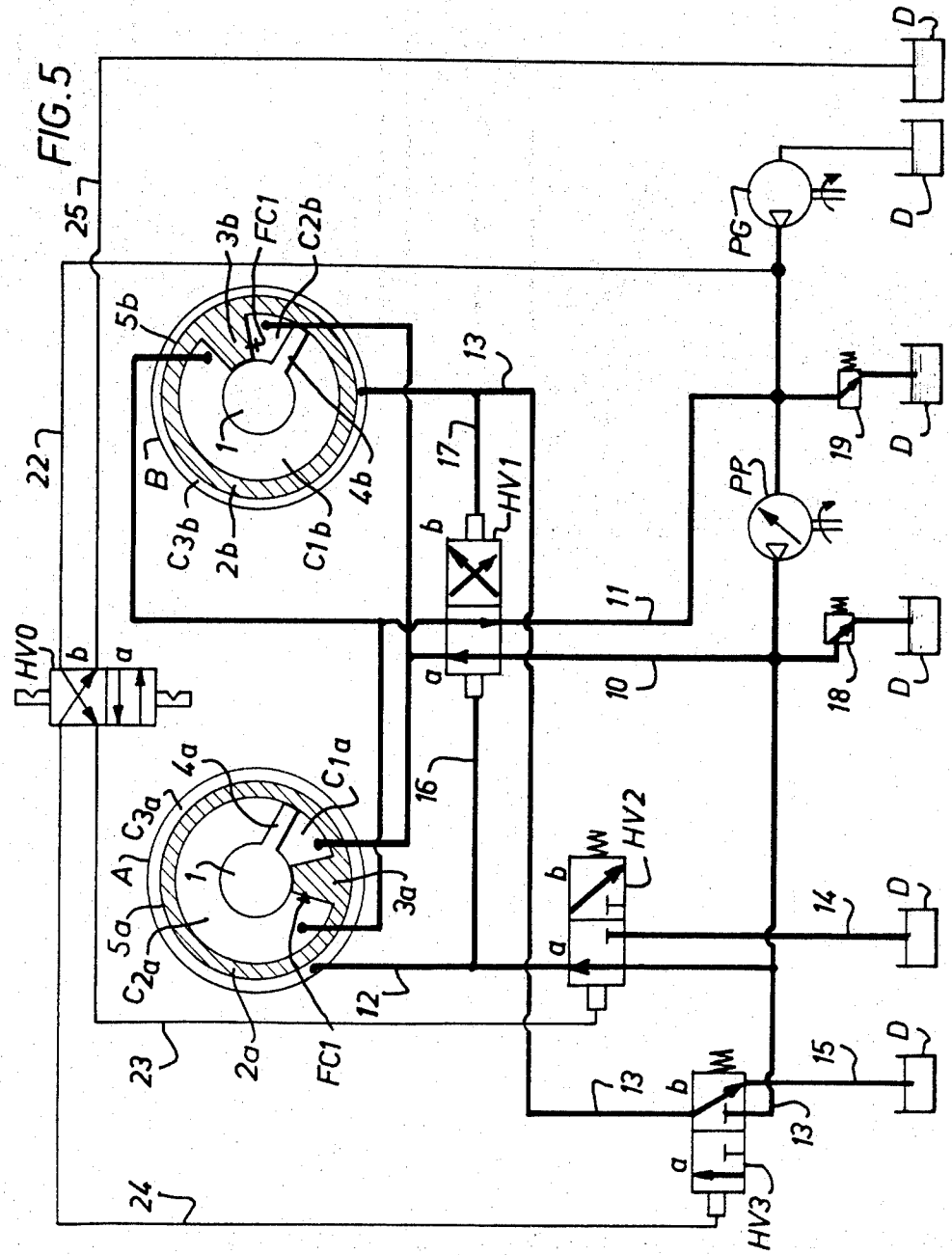
25
22
23
24
HV0
HV1
HV2
HV3
PG
PP
FC1
FC1
A
B
1
2a
2b
3a
3b
4a
4b
5a
5b
C1a
C1b
C2a
C2b
C3a
C3b
10
11
12
13
14
15
16
17
18
19
D
a
b

FIG. 6a

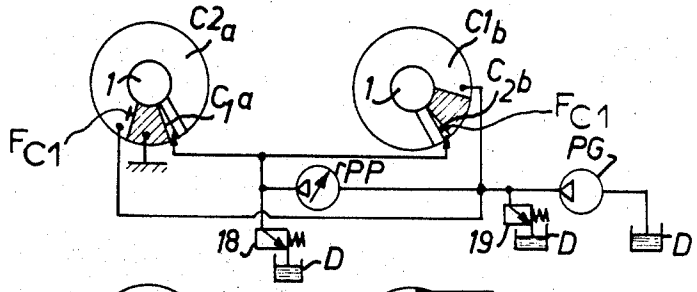

FIG. 6b

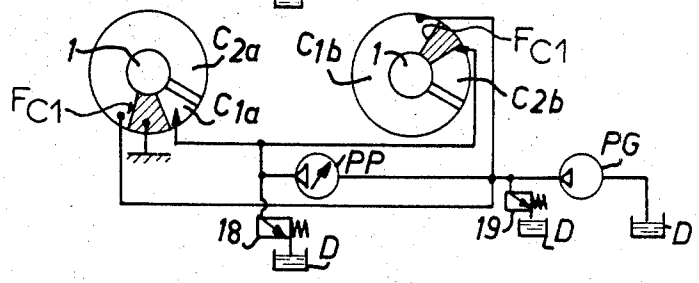

FIG. 6c

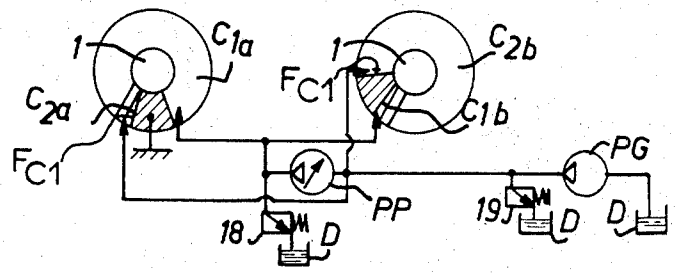

FIG. 6d

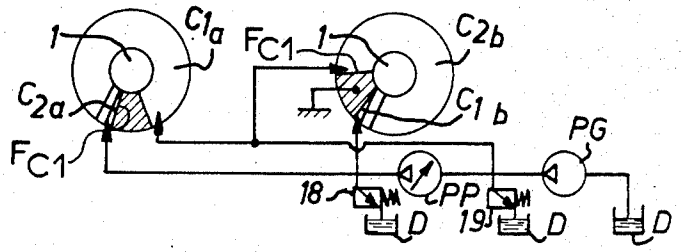

FIG. 6e

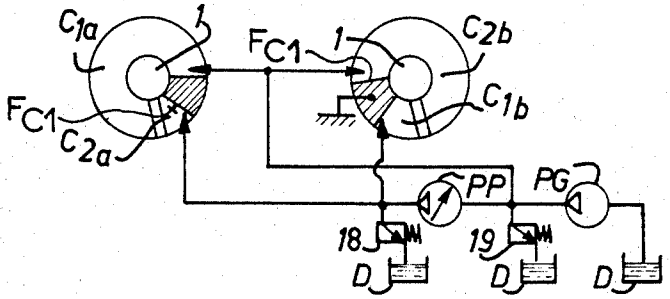

DEVICE FOR DRIVING A SHAFT IN ROTATION

The present invention relates to a device for driving rotary jacks in continuous or almost continuous rotation for the production of high torques, especially applicable to the production of motors intended to supply a high power with an overall size which is as small as possible.

Rotary jacks are already known from which there is obtained a movement of rotation at high torque, these generally comprising a hollow cylindrical casing known as the stator, and being provided with a longitudinal internal abutment mounted on a shaft having the same axis in which is fixed a blade de-limiting two fluid-tight chambers comprised between a lateral face of the blade and a lateral face of the abutment, each chamber being alternatively put under pressure and under depression in order to obtain alternately the rotation of the shaft and rotation of the cylinder, the above cylindrical casing being alternately locked and released with respect to a casing which encloses it.

Jacks of this kind do not however provide the possibility of obtaining a large angle of rotation of the shaft at each cycle, the value of this angle being always less than one revolution, and the utilization of these jacks involves a substantial proportion of dead time.

The present invention avoids these drawbacks by providing a device giving the possibility of obtaining rotation of a shaft through a much greater angle and even continuous rotation, thereby practically eliminating the dead times inherent in conventional rotary jacks.

The device according to the invention, of the kind comprising at least one group of two identical rotary jacks mounted on a common shaft, the annular space comprised between the cylindrical casing of each jack and the shaft coaxial with this latter being divided into two fluid-tight chambers of variable volume, separated on the one hand by a longitudinal abutment arranged on the internal face of the said cylindrical casing, and on the other hand by a radial blade fixed longitudinally in the shaft, the cylindrical casing of each jack being provided with a device for locking it with respect to the housing, is characterized in that it comprises a hydraulic circuit composed of two parts coupled to a common tank, a first portion supplied by a main pump co-operating on the one hand with the first chamber of the first jack and the first chamber of the second jack, and further co-operating with the locking devices of the cylindrical casings of the jacks, and a second portion supplied by a topping-up pump cooperating with the second chamber of the first jack and the second chamber of the second jack, these two chambers being coupled in parallel to the said topping-up pump and members for reversing the direction of circulation of the fluid between the corresponding chambers of the two jacks, cooperating through the intermediary of a control distributor with the elements of the hydraulic circuit, the locking device of the cylindrical casing of one jack being constituted by a cylindrical housing enclosing the said casing and comprising a fluid-tight annular chamber, in which the wall in contact with the outer surface of this same casing is a thin wall, the said annular chamber being connected by means of a three-way distributor with two positions, either to the main pump or to the common tank.

In accordance with other characteristic features:

—in each jack, the longitudinal abutment of the cylindrical casing is provided on one side with a control contact of a four-way distributor with two positions, the said contact cooperating with the corresponding blade and the said distributor co-operating with two conduits connected in parallel to the topping-up pump;

—The first portion of the hydraulic circuit comprises two valves for reversing the direction of circulation of the fluid in two conduits connected in parallel to the main pump and coupling this latter to the locking devices of the jacks and coupling said jacks to the common tank, these two three-way distributors with two positions being always simultaneously in positions contrary to each other, the control devices of the said distributors co-operating respectively with the fluid circulating in two conduits connected in parallel to the topping-up pump;

—The first portion of the hydraulic circuit comprises a distributor for reversing the direction of circulation of the fluid between the first two chambers of the two jacks, the said distributor having four ways and two positions, its control members co-operating respectively with the fluid circulating in the conduits connected in parallel between the main pump and the locking devices of the jack.

According to an alternative form:

—A differential coaxial with each of the two jacks is interposed between them, the cylindrical casing of each of them being rigidly fixed to one of the two crown wheels of the said differential, its satellite pinions being fixed radially and uniformly spaced apart on the common shaft, and engaging with the said crown wheels;

—The corresponding chambers of the two jacks are coupled in parallel to circuits which are themselves in parallel on the main pump, while the circuit of the topping-up pump comprises only two branches in parallel connected to the controls of the distributors for reversing the circulation of the fluid in the conduits connecting the main pump to the locking devices.

Other characteristic features and advantages of the invention will be more clearly brought out in the description which follows below, given by way of non-limitative example, reference being made to the accompanying drawings, in which:

FIG. **1***a* represents a longitudinal cross-section of a pair of jacks according to the invention;

FIGS. **1***b* and **1***c* show respectively the transverse sections of the said jacks taken along the lines Y—Y and Z—Z of FIG. **1***a*;

FIG. **2** shows the diagram of the hydraulic control circuits of the above pair of jacks:

FIGS. **3***a*, **3***b*, **3***c*, **3***d* and **3***e* show diagrammatically the successive stages of the operation of the pair of jacks;

FIG. **4** shows a longitudinal cross-section of another form of construction of a pair of jacks according to the invention;

FIG. **5** represents the diagram of the hydraulic control circuits of the pair of jacks in the form of construction shown in FIG. **4**;

FIGS. **6***a*, **6***b*, **6***c*, **6***d* and **6***e* show diagrammatically the successive stages of the operation of the pair of jacks in the form of construction shown in FIG. **4**.

Referring now to FIGS. **1***a*, **1***b* and **1***c*, the device according to the invention comprises a set of jacks A and B mounted on a common shaft **1**, comprising two cylinders **2***a* and **2***b* coaxial with the shaft **1** and forming a fluid-tight annular chamber between their internal longitudinal and transverse walls and the outer wall of the said shaft. Each of the cylinders **2***a* and **2***b* comprises a longitudinal abutment **3***a* (and **3***b*), directed parallel to a generator line arranged from one transverse wall to the other, the internal face of which is in fluid-tight contact with the shaft **1**. In each of the parts of this shaft corresponding to the interior of the above cylinders, there are fixed radial blades such as **4***a* and **4***b*, the end faces of which are in moving and fluid-tight contact with the corresponding longitudinal inner faces of the cylinders **2***a* and **2***b*, and the transverse faces are also in moving and fluid-tight contact with the inner transverse faces of the said cylinders.

The annular space located between the shaft **1** and each of the cylinders **2***a* and **2***b* is thus divided by the abutment and the corresponding radial blade into two fluid-tight chambers such as C_{1a} and C_{2a} in the cylinder **2***a* and C_{1b} and C_{2b} in the cylinder **2***b*, and the volume of which varies when the abutment and the blade are in relative movement with respect to each other, the total volume of the two corresponding chambers remaining constant.

The assembly formed by the cylinders **2***a* and **2***b* is enclosed by a common housing **5** comprising, facing each of the said cylinders, a closed annular space or chamber C_{3a} or C_{3b} separated from the outer face of the corresponding cylinder by a thin wall **5***a* or **5***b*; when one of these chambers is filled with a fluid under pressure, the thin wall produces a binding-hoop effect on the corresponding cylinder and immobilizes it.

Referring now to FIG. **2**, the hydraulic circuit for driving the

shaft 1 in rotation comprises a first portion, shown in thick lines, which comprises a main high-pressure pump PP coupled by the conduit 10 to the chamber C_{1a} of the jack A and by the conduit 11 to the chamber C_{1b} of the jack B, and is coupled to the chambers C_{3a} and C_{3b} respectively by the conduits 12 and 13, the conduits 14 and 15 permitting the coupling to the tank B of the chambers C_{3a} and C_{3b} through the intermediary of hydraulic distributors HV_2 and HV_3 respectively, each of the type with three ways and two positions, these latter being shown symbolically by the rectangles *a* and *b* respectively, the rectangle *a* of the distributor HV_2 putting the pump PP in communication with the chamber C_{3a} and its rectangle *b* putting this same chamber into communication with the tank B, while the rectangle *a* of the distributor HV_3 establishes the connection between the pump PP and the chamber C_{3b} and its rectangle *b* the connection between this same chamber and the tank D.

A distributor HV_1 of the type with four ways and two positions *a* and *b* and the movement of which is controlled by appropriate devices known per se, actuated by the fluid pressure supplied to the said devices by the conduits 16 and 17, respectively branched on the conduits 12 and 13, is arranged on the pair of conduits 10 and 11 so as to permit reversal of the direction of circulation of the fluid between the chambers C_{1a} and C_{1b}.

This first conduit is completed by a pressure-limiting device 18, calibrated to a pressure P, mounted between the outlet of the pump PP and the tank, and by a pressure-limiting device 19 calibrated to a value p less than P, mounted between the return circuit of the said pump and the tank D.

The second part of the hydraulic circuit, shown in lines of normal thickness, comprises a topping-up pump PG connected on the one hand to the tank D and on the other hand coupled by the conduits 20 and 21, branched on the common conduit 22, respectively, to the chambers C_{2a} of the jack A and C_{2b} of the jack B. The conduit 22 may be connected to the control device of the distributor HV_2 by means of the conduit 23, or to the control device of the distributor HV_3 by means of the conduit 29, through the intermediary of the distributor HV_0 of the type with four ways and two positions *a* and *b*, the position *b* enabling the topping-up pump to be put into communication with the control of the distributor HV_2 through the intermediary of the conduits 22 and 23, and permits the control of the distributor HV_3 to be put into communication with the tank D through the intermediary of the conduits 24 and 25, the position *a* permitting the topping-up pump to be put into communication with the control of the distributor HV_3 through the intermediary of the conduits 22 and 24 and also the control of the distributor HV_2 to be put into communication with the tank through the intermediary of the conduits 23 and 25.

The distributors HV_2 and HV_3 are identical and are displaced into position *a* by the effect of the pressure applied by the fluid on their control, and are returned to position *b* by a spring R when the effect of this pressure ceases. The distributor HV_0 is of the latching type with mechanical control; its movement from position *a* to position *b* is obtained by means of the hydraulic end-of-travel contact FC_1, placed on each of the abutments 3*a* and 3*b*, actuated by one or the other of the blades 4*a* and 4*b* arriving at the end of its travel against the corresponding abutment. This second part of the hydraulic circuit is completed by a pressure-limiting device 26 interposed between the tank and the outlet of the topping-up pump in order to protect this latter, and is calibrated to a pressure P_1. In addition, a non-return valve 27, calibrated to a pressure Δp is interposed between the return of the main pump PP and the topping-up pump PG.

In the FIG. 2 there has been shown the position of the whole of the device when the distributor HV_0 occupies the position *b*. Under these conditions, the distributor HV_2, the control of which is under pressure, permits the passage of the fluid under pressure sent by the pump PP into the conduits 12 and 16, which has the effect of maintaining the chamber C_{3a} under pressure and immobilizing the cylinder 2*a*, and of pushing or maintaining the distributor HV_1 in the position *a* while the distributor HV_3 is in the position *b*, its control being under depression, which has the effect of putting the conduit 13 and therefore the chamber C_{3b} under depression, together with the conduit 17.

The passage of the distributor HV_0 to the position *a* has the effect of putting the conduit 24 under pressure and in consequence to cause the distributor HV_3 to pass to the position *a* and to put under depression the conduit 23 and in consequence to cause the distributor HV_2 to pass into the position *b*. The conduits 12 and 16 are then under depression while the conduits 13 and 17 are under pressure ; for this reason, the cylinder 2*b* is immobilized while the cylinder 2*a* is freed and the distributor HV_1 is pushed from the position *a* to the position *b*.

Under these conditions, and referring to FIGS. 2, 3*a*, 3*b*, 3*c*, 3*d* and 3*e*, the operation of the whole of the device is as follows: the jacks A and B being assumed to be simultaneously and respectively found in the conditions shown in FIGS. 3*a* and 3*b*, for which the end-of-travel contact FC_1 has just been actuated by the blade 4*b* of the jack B and occupies the position *b*, the main pump PP and the topping-up pump PG being also assumed to be in operation, the distributor HV_2 operated by the contact FC_1 into the position *a* drives in its turn the distributor HV_1 into the position *a*. The fluid contained in the chamber C_{3a} of the jack A being then put under pressure, the thin wall 5*a* is deformed and holds the cylinder 2*a* immobilized, while the chamber C_{1a} is supplied with fluid under pressure. Under the effect of the thrust applied to the blade 4*a*, the shaft 1 common to the two jacks A and B is then driven in rotation about its axis X—X'. The speed of rotation ω of the said shaft and the torque which is applied to it depend on the dimensions of the blade, on the pressure and on the flow-rate Q of the fluid injected by the pump PP.

The blade 4*b* of the jack B is then driven by the shaft 1 at a speed of rotation which, with respect to a fixed reference point, has also the value ω while the cylinder 2*b* is in turn driven in rotation about the axis X—X' at a speed ω' at least equal to 2W with respect to the same fixed reference point. In fact, the fluid stored in the chamber C_{2a} is delivered into the chamber C_{2b} as and when the volume of the chamber C_{1a} increases, the delivery flow-rate having in consequence at each instant, the same value Q as the flow-rate of supply of the fluid under pressure to the chamber C_{1a}, while the topping-up pump PG supplies a supplementary quantity of fluid with a flow-rate *q* to the chamber C_{2b}.

The pressure of the fluid in the chamber C_{2b}, equal to $p1$, is greater by Δp than the pressure *p* of the fluid in the chamber C_{1b}. For this reason, the abutment 3b and in consequence the cylinder 2*b* is driven in rotation about X—X' with respect to the blade 4*b* at a speed at least equal to ω; as the said blade is itself driven in rotation with respect to the fixed reference point at a speed ω, the speed of the cylinder 2*b* with respect to the fixed reference point, that is to say its absolute speed, is actually equal to at least 2ω.

As the abutment 3*b* of the cylinder 2*b* of the jack B rotates faster than the blade 4*b*, it comes up with the latter before the blade 4*a* of the jack A has completed its travel (see FIG. 3*c*), and then moves at the same speed as the blade 4*b* until the blade 4*a* has completed its course, thus being located in the same relative positions as at the outset. When the blade 4*a* completes its travel (see FIG. 3*d*) it actuates the end-of-travel contact FC_1 on the abutment 3*a*, which has the effect of placing the corresponding distributor in the position *a* and in consequence of causing the release of the cylinder 2*a* by putting the chamber C_{3a} into communication with the tank through the intermediary of the distributor HV_2 passed into the position *b*, of causing the locking of the cylinder 2*b* of the jack B, due to the fact that the fluid is under pressure in the chamber C_{3b} put into communication with the main pump PP, through the intermediary of the distributor HV_3 which has passed into the position *a*. The jack B is then in the condition in which the

jack A was placed at the beginning of the cycle and vice versa. The cycle then continues, the jack B carrying out the same function as the jack A in the previous stage and conversely, and ensuring the rotation of the common shaft until the whole assembly is in the same condition as at the beginning of the cycle, after which a fresh cycle is started.

It is clear that instead of arranging a set of two rotary jacks on the same shaft, it is possible to provide more, three or four for example, and thereby to increase the value of the torque available on the shaft.

Furthermore, in order to obtain rotation of the common shaft in both directions, it is only necessary to complete the hydraulic circuit described above by two distributors of the same type as the distributors HV_2 and HV_3, which have the purpose of changing-over the functions of the set of chambers C_{1a} and C_{1b} with the functions of the set of chambers C_{2a} and C_{2b}, by a distributor of the same type as HV_1 which ensures the switching over of the movements of fluid between the chambers C_{2a} and C_{2b}, and by a distributor ensuring the change-over of the functions of the chambers C_{3a} and C_{3b}.

In accordance with another form of embodiment, the rotary jack according to the invention differs from that previously described by the addition of a differential interposed between the two elementary jacks A and B. Referring now to FIG. **4**, a jack of this kind is constituted by the same elements as the jack shown in FIGS. **1***a*, **1***b* and **1***c*, but further comprises two conical toothed crown-wheels **6***a* and **6***b* respectively fixed to the cylinders **2***a* and **2***b* and arranged face to face as shown in FIG. **4**, and also the conical pinions **7** engaging simultaneously with the toothed crown-wheels **6***a* and **6***b*, and the axes of which are located in the same plane, perpendicular to the axis X—X′ and intersecting on this latter at the point O, the axes of the said pinions being uniformly spaced apart from the other. These bevel pinions, the number of which is suitably chosen and may be for example from one to six, pivot in the shaft **1** when it is given a movement of rotation.

The hydraulic control circuit of a jack of this kind, shown in FIG. **5**, is similar to that of the previous jack, but comprises a few simplifications with respect to this latter. In fact, the chambers C_{1a} and C_{2b} on the one hand and C_{2a} and C_{1b} on the other are respectively connected in parallel on the main pump PP, in such manner that when the chambers C_{1a} and C_{2b} are simultaneously under pressure, the chambers C_{2a} and C_{1b} are simultaneously under depression and vice versa, the changing over of the functions being effected by means of the distributor HV_1. In this way, the non-return valve can be eliminated, since the over-pressure Δp necessary in the previous case for the driving in rotation of that of the two cylinders **2***a* which is mobile, is no longer necessary. In consequence, the pressure-limiting device **26** can also be dispensed with.

Under these conditions, the operation of the jack, illustrated by the diagrams of FIGS. **6***a*, **6***b*, **6***c*, **6***d* and **6***e* is as follows:

As the distributor HV_0 actuated by the end-of-travel contact FC_1 has just taken-up the position *b* (see FIG. **5**), the distributor HV_2, actuated by HV_0, is placed in its turn in the position *a*, which has the effect of putting the distributor HV_1 into the position *a*, and in consequence of causing the jack A to drive, since the chamber C_{1a} is supplied with fluid under pressure through the intermediary of the portion *a* of the distributor HV_1 and since the fluid has been put under pressure in the chamber C_{3a} through the intermediary of the position *a* of the distributor HV_2, the cylinder **2***a* being thereby locked.

The thrust which is applied on the blade **3***a* imparts to the shaft **1** a speed of rotation W with respect to a fixed reference point, and also a torque, the value of this speed and this torque being, as previously, a function of the dimensions of the blade, of the pressure and of the flow-rate of the fluid utilized. The blade **3***b* is then driven in rotation by the common shaft **1** at the same speed W as the blade **3***a* with respect to the same fixed reference as above, but the crown-wheel **6***a* of the differential, coupled to the locked cylinder **2***a* has zero speed, and the pinions **7** driven by the shaft **1** in a movement of rotational drive about the axis X—X′ at the speed W impart to the crown-wheel **6***b*, coupled to the cylinder **2***b*, a speed of rotation about the same axis X—X′ having a value of 2W with respect to the fixed reference point.

During the course of this movement, the increase of the volume of the chamber C_{2b} has the same value as that of the chamber C_{1a}, these two chambers being simultaneously supplied with fluid under high pressure, at the same pressure and with the same flow-rate. For this reason, a thrust is produced which, being supported on the blade **3***b*, is applied on the cylinder **2***b* through the intermediary of the abutment **4***b* and produces there a torque of the same value as that which is applied to the blade **4***a* of the jack A. This torque is transmitted through the intermediary of the crown-wheel **6***b*, to the pinions **7** which transmit it to the shaft **1** by their arbors.

In this way, perfect synchronization is obtained of the relative movements of the cylinders **2***a* and **2***b*, respectively relative to the blades **4***a* and **4***b*, and there is transmitted to the common shaft **1** the sum of the torques developed by each of the jacks A and B.

When the blade **4***a* has just completed its travel (see FIG. **6***c*) and actuates the end-of-travel contact FC_1, the corresponding distributor passes from the position *b* to the position *a*, thus causing the change-over of the distributor HV_3 from the position *b* to the position *a* and in consequence that of the distributor HV_1 from the position *a* to the position *b*, which has the effect, on the one hand, of locking the cylinder **2***a*, the fluid under pressure being admitted to the chamber C_{3a}, of releasing the cylinder **2***b*, the chamber C_{3b} being put to the tank, and of supplying fluid under pressure to the chambers C_{1b} and C_{2a}, and in consequence of interchanging the functions of the jacks A and B, the cycle continuing as shown in the diagrams of FIGS. **6***d* and **6***a* until the whole assembly is again returned to the initial condition shown in the diagram of FIG. **6***a*.

This second form of embodiment has the further advantage of slightly simplifying the hydraulic circuit, and also that of permitting the continuous utilization of the torque supplied by the two jacks A and B. In addition, as this hydraulic circuit is perfectly symmetrical with respect to the two jacks, in order to obtain the possibility of rotating the shaft **1** in both directions, it is only necessary to provide in this circuit two distributors which interchange the functions of the chambers C_{3a} and C_{3b} and which respectively couple the chamber C_{3b} to the position *b* of the distributor HV_1, and the chamber C_{3a} to the position *a* of this same distributor.

I claim:

1. A shaft driving arrangement comprising in combination: a shaft having at least one set of two identical rotary driving members mounted thereon, said driving members being in the form of a first and a second cylindrical casing in coaxial relationship around such shaft and being separated therefrom by an annular space, each of said cylindrical casings having a longitudinal abutment on its inner face, said shaft having a radial blade extending longitudinally thereof and cooperating with said longitudinal abutment to form first and second fluid-tight variable volume chambers in said annular space, said chambers being separated on one hand by said longitudinal abutment and on the other hand by said radial blade; a cylindrical housing enclosing each of said casings and including a pair of annular fluid-tight chambers each of which has a thin wall portion in contact with the outer surface of one of said casings, said annular chambers being selectively filled with fluid to lock said housing and one of said casings together so that as the volume of the variable volume chamber is varied the shaft is driven; an hydraulic circuit for reversing the direction of circulation of fluid between corresponding chambers of the two driving members, said circuit comprising a first portion and a second portion, a common tank for said two portions of the hydraulic circuit, a main pump adapted to supply said first portion of the circuit, a topping-up pump adapted to supply said second portion of the circuit, and a three-way distributor device with two positions to alternatively connect one of said

annular chambers either to said main pump or to said common tank.

2. A driving device as claimed in claim 7, and further characterized by:

—two conduits connected in parallel on said topping-up pump,

—a four-way distributor device with two positions, adapted to co-operate with said two conduits,

—a control contact mounted on said longitudinal abutment and ensuring the control of said distributor device with four ways and two positions, said contact co-operating with the corresponding said blade.

3. A driving device as claimed in claim 2, further characterized by:

—two conduits connected in parallel on said main pump and connecting said pump to said locking devices and connecting said devices to said common tank,

—two distributors with three ways and two positions for reversing the direction of circulation of the fluid in said two conduits connected in parallel on said main pump, said two distributors being always simultaneously in contrary positions with respect to each other,

—control devices for said reversing distributors, co-operating with the fluid circulating in said two conduits connected in parallel on said topping-up pump,

—two further conduits connected in parallel on said main pump and connecting said pump to said first chamber of said first casing and to said first chamber of said second casing,

—a four-way distributor with two positions for reversing the direction of circulation of the fluid, mounted on said two other conduits,

—control devices for said reversing distributor co-operating with the fluid circulating in said conduits connected in parallel between said main pump and said locking means,

—a conduit in parallel on said topping-up pump coupling said latter pump with said second chamber of said first casing and with said second chamber of said second casing.

4. A driving device as claimed in claim 7, and further characterized by:

—a differential gear interposed between said two driving members comprising:

—two toothed crown-wheels each rigidly fixed to said cylindrical casing of one of said driving members,

—satellite pinions fixed radially and uniformly spaced apart on said shaft and adapted to engage with said toothed crown-wheels.

5. A driving device as claimed in claim 4, and further characterized by:

—two conduits connected in parallel on said topping-up pump,

—a four-way distributor device with two positions co-operating with said two conduits,

—a control contact mounted on said longitudinal abutment and ensuring the control of said four-way distributor device with two positions, said contact co-operating with said corresponding blade,

—two conduits connected in parallel on said main pump and coupling said latter pump with said locking devices and coupling said devices to said common tank,

—two distributors with three ways and two positions for reversing the direction of circulation of the fluid in said two conduits connected in parallel on said main pump, these two distributors being always simultaneously in contrary positions with respect to each other,

—control devices for said reversing distributors co-operating with the fluid circulating in said two conduits connected in parallel on said topping-up pump,

—two other conduits connected in parallel on said main pump and coupling in parallel said corresponding chambers of said two driving members,

—a four-way distributor with two positions for reversing the direction of circulation of the fluid mounted on said two other conduits,

—control devices for said reversing distributor adapted to co-operate with the fluid circulating in said conduits connected in parallel between said main pump and said locking devices.

6. A driving device as claimed in claim 7, and further characterized by:

—a first calibrated pressure-limiting device mounted between said main pump and said tank,

—a second pressure-limiting device, calibrated to a value higher than that of said first pressure-limiting device and mounted between said topping-up pump and said tank,

—a non-return valve mounted between said first and second pressure-limiting devices.

* * * * *