L. BAKKE.

PAPER GUIDE FOR PRINTING PRESSES.

APPLICATION FILED SEPT. 11, 1912.

1,068,477.

Patented July 29, 1913.

Fig. 1.

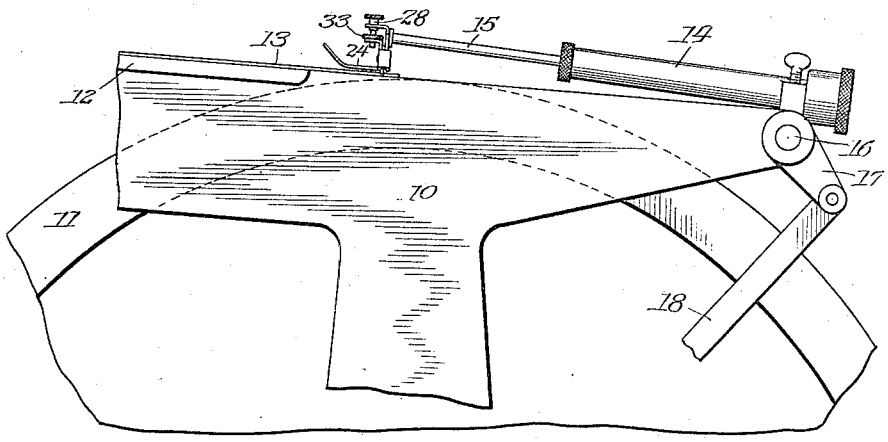

Fig. 2.

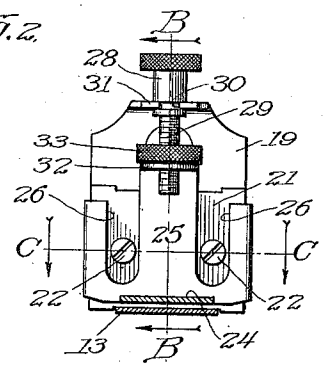

Fig. 3.

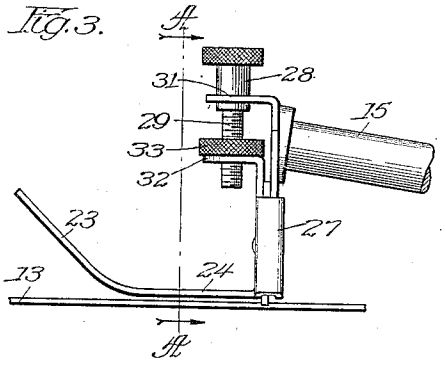

Fig. 4.

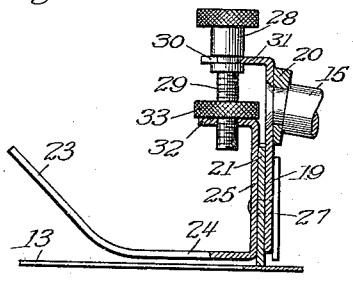

Fig. 5.

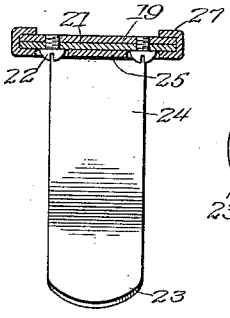

Fig. 6.

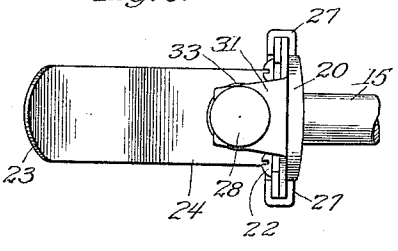

Witnesses:
Robert H. Weir
Arthur B. Franke.

Inventor.
Leopold Bakke
by John Howard McElroy
Atty.

UNITED STATES PATENT OFFICE.

LEOPOLD BAKKE, OF CHICAGO, ILLINOIS.

PAPER-GUIDE FOR PRINTING-PRESSES.

1,068,477. Specification of Letters Patent. Patented July 29, 1913.

Application filed September 11, 1912. Serial No. 719,764.

To all whom it may concern:

Be it known that I, LEOPOLD BAKKE, a citizen of the United States, and a resident of Chicago, in the county of Cook and State of Illinois, have invented certain new and useful Improvements in Paper-Guides for Printing-Presses, of which the following is a full, clear, and exact specification.

My invention is concerned with certain new and useful improvements in paper guides for printing presses of the adjustable type shown in my applications, No. 671,284, filed January 15, and No. 673,475, filed January 25, 1912, for Letters Patent of the United States, wherein the position of the engaging surfaces of the guides above the top surfaces of the under guides can be readily and accurately regulated; and my present invention is designed to produce a device of the class described which shall have all the advantages of those of my aforesaid applications, but which shall be simpler in construction and capable of being manufactured more cheaply.

To illustrate my invention, I annex hereto a sheet of drawings, in which the same reference characters are used to designate identical parts in all the figures, of which,—

Figure 1 is a side elevation of a portion of a press showing my invention applied thereto; Fig. 2 is a front elevation thereof on an enlarged scale, in section on the line A—A of Fig. 3; Fig. 3 is a side elevation thereof; Fig. 4 is a central section on the line B—B of Fig. 2; Fig. 5 is a plan view in section on the line C—C of Fig. 2; and Fig. 6 is a top plan view.

In Fig. 1, 10 indicates the framework of a rotary press, of which 11 is the cylinder, 12 is the feed board, and 13 indicates one of the under guides on the surface of said board, with which the front guide shown coöperates. It will be understood that my invention is also adapted to be employed in connection with side guides, as well as front guides. The supporting sleeves 14, each of which has a supporting rod 15, which is longitudinally adjustable therein by any desired means to adjust the position of the stop plates, are secured on the rock shaft 16 which carries the crank arm 17 connected by the link 18 with the customary cam mechanism by which the front guides are thrown up at the proper time to allow the paper to be carried onto the cylinder and down at the proper time to serve as a stop when the sheets are fed into position. The mechanism thus far described may be of any desired construction, and forms no part of my present invention.

The outer end of the supporting arm 15 has rigidly secured thereon the supporting plate 19, which may be conveniently riveted against the block 20 resting against the shoulder formed on the end of the rod 15. Where the stop plate 21 is constructed separately from the supporting plate 19, as is the preferable construction, said stop plate 21 may be conveniently secured against said plate 19 by the screws 22. It will be understood that the lower edge of the stop plate 21 coöperates with the upper surface of the under guides 13 in the customary manner.

Instead of employing the expensive spring guides of my aforesaid applications, in my present invention, I employ a rigid guide which is conveniently stamped up from sheet-metal and has the upturned end 23 which serves to guide the edge of the paper beneath the horizontal portion 24 and against the edge of the stop plate 21. The vertical portion 25 of the guide is preferably formed with two recesses 26 to accommodate the heads of the screws 22, and it also preferably has the turned-over edges 27 which embrace the outer edges of the supporting plate 19 and the stop plate 21, so that the vertical portion of the guide is vertically guided by and is movable on said supporting and stop plates. As a convenient method of adjusting the horizontal portion 24 at the exact distance desired above the under guide 13, I preferably journal the head 28 of the set screw 29 in a slot 30 formed in the horizontal portion 31 of the supporting plate 19, bent over from the top thereof, and the threaded portion of the screw 29 is threaded through an aperture in the horizontal portion 32, turned over from the top of the vertical portion 25 of the guide. A lock nut 33 is threaded onto the screw 29 above the aforesaid horizontal portion 32; and with the construction described, it will be apparent that an extremely fine adjustment of the distance between the under side of the horizontal portion 24 of the guide and the upper surface of the under guide 13 may be obtained by turning the head 28 of the screw 29, and when the desired adjustment is secured, the parts can be rigidly

secured in said position by turning the lock nut 33 down against the horizontal portion 32.

While I have shown and described my invention in the form which I at present consider best adapted to carry out its purposes, it will be understood that it is capable of some modifications, and that I do not desire to be limited in the interpretation of the following claims except as may be necessitated by the state of the prior art.

What I claim as new, and desire to secure by Letters Patent of the United States, is:

1. In a device of the class described, the combination with a supporting rod, of a vertical supporting plate secured to the outer end thereof, a vertical stop plate secured to the supporting plate, a rigid guide plate having a horizontal portion and an upturned end mounted to be moved vertically on said stop plate, and means for securing said guide plate in any position to which it may be adjusted.

2. In a device of the class described, the combination with a supporting rod, of a vertical supporting plate secured on the outer end thereof, a vertical stop plate secured on said supporting plate, a rigid guide plate having a horizontal portion and an upturned end mounted to be moved vertically on said supporting and stop plates, and means for securing said guide plate in any position to which it may be moved.

3. In a device of the class described, the combination with a supporting rod, of a vertical supporting plate supported on the outer end thereof and having a horizontal portion at the top, a vertical stop plate secured on the supporting plate, a rigid guide plate having a lower horizontal portion and an upturned end, together with an upper horizontal portion, and mounted to be moved vertically upon the supporting and guide plates, a screw journaled in the horizontal portion at the top of the supporting plate and threaded through the horizontal portion at the top of the guide plate, and a lock nut on said screw adapted to coöperate with the horizontal portion at the top of the guide plate, for the purpose described.

In witness whereof, I have hereunto set my hand and affixed my seal, this 31st day of August, A. D. 1912.

LEOPOLD BAKKE. [L. S.]

Witnesses:

JOHN HOWARD MCELROY,

MILDRED ELSNER.

Copies of this patent may be obtained for five cents each, by addressing the "Commissioner of Patents, Washington, D. C."