(No Model.)

# E. J. TOOF.

## TUCK MARKING ATTACHMENT FOR SEWING MACHINES.

No. 590,350. Patented Sept. 21, 1897.

*Fig. 1,*

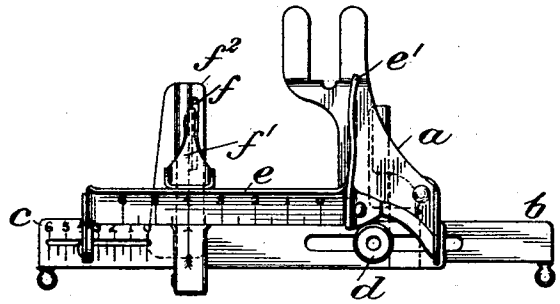


*Fig. 2,*

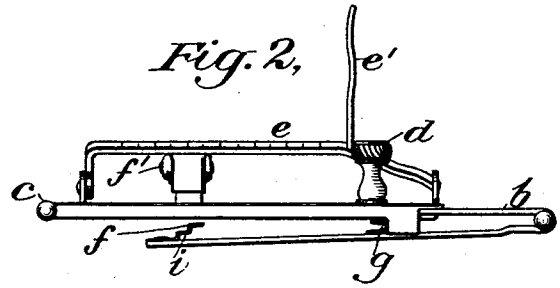


*Fig. 4,*

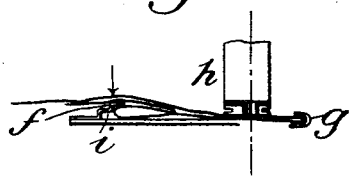


*Fig. 5,*

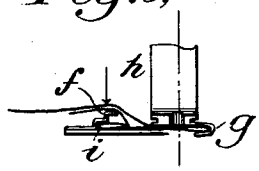


*Fig. 3,*

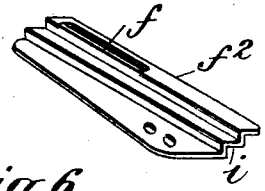


*Fig. 6,*

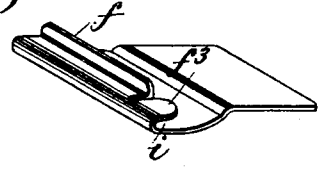


*Witnesses:-*

O. F. Maynard

A. L. Hayes.

*Inventor:-*

Edwin J. Toof

by Chas. F. Dain

his atty.

THE NORRIS PETERS CO., PHOTO-LITHO., WASHINGTON, D. C

# UNITED STATES PATENT OFFICE.

EDWIN J. TOOF, OF NEW HAVEN, CONNECTICUT.

## TUCK-MARKING ATTACHMENT FOR SEWING-MACHINES.

SPECIFICATION forming part of Letters Patent No. 590,350, dated September 21, 1897.

Application filed October 8, 1894. Serial No. 525,206. (No model.)

*To all whom it may concern:*

Be it known that I, EDWIN J. TOOF, a citizen of the United States, and a resident of New Haven, in the county of New Haven and State of Connecticut, have invented new and useful Improvements in Tuck-Marking Attachments for Sewing-Machines, of which the following description, taken in connection with the drawings herewith accompanying, is a specification.

My invention relates to that class of tuck-marking attachments comprising a supporting-frame having two adjustable slides thereon, one of which supports a guide and the other a marking or creasing device, the latter device embodying a vertical flange and a movable arm or member for coacting with the upper edge of said flange to mark or crease interposed goods in a manner as well understood by those skilled in the art. It has been found in practice when the attachment is adjusted and set for forming narrow tucks, and the guide and marker are consequently brought adjacent to each other and to the path of the needle, that the width of the tucks varies by reason of the angle at which the goods are drawn over the upper edge of the marking-plate, and thus materially increasing the distance between the guide and marker from a straight line to a point beneath the presser, between which parts the distance is gaged to regulate the width of the tucker; and it has been the object of my present invention to obviate such difficulty and secure a uniformity in the width of tucks of any size.

The invention also embraces other features of construction, as will hereinafter be set forth in detail and pointed out in the claims.

Referring to the drawings, Figure 1 represents a plan view of a tuck-marking attachment embodying my invention; Fig. 2, a front view of the same; Fig. 3, a detail view in perspective of the marking-plate; Figs. 4 and 5, detail views showing the relative positions of the marking-plate and guide with the presser-foot and path of needle when the parts are adjusted for different widths of tucks, said views also showing the arrangement of the goods in position to be operated upon; and Fig. 6, a modified form of the marking-plate.

To explain in detail, the frame *a*, the sliding plates *b* and *c*, supported on said frame for carrying a marking device and a guide, the adjusting-screw *d* for securing said plates in a desired position, and the rocking bar *e*, having the arm *e'* for engagement with the needle-bar or a part thereof, whereby said rocking bar is operated to engage with and operate the moving member of the marking or creasing device, are of usual construction and not of my present invention.

The marking or creasing device consists of the upright plate or flange *f*, carried by the lower arm of the sliding plate *b*, and the moving arm *f'*, which is operated by the rocking bar *e* to engage with the upper edge of said plate or flange *f* to crease or mark the material which is fed between said engaging surfaces.

Heretofore the marking-plate *f* has been formed in a vertical line, or nearly so, from its base to present a straight wall against which the edge of the tuck or under fold of the goods moved, and the increased distance between such wall and the guide *g* or the adjacent edge of the presser-foot *h* (from which latter point the upper fold of the goods to be marked begins to draw upward) in a straight line and at an angle over the marking edge when the parts are moved close together for a narrow tuck, as shown in Fig. 5, is very apparent. To remedy such defect, I have formed the marking-plate *f* with a groove or space *i* at one side of its marking edge to receive the edge of the tuck or under fold of the goods, the rear or guiding wall of which and the marking edge *f* being so arranged that the distances described between the same and the guide *g* when the parts are close together are approximately equal, thus securing a uniformity in the marking for the tucks and consequently in the width of the tucks.

When the attachment is adjusted for tucks of greater width, as shown in Fig. 4, the variation in the distance between the guide and the marking-plate in a straight line and at an angle over the edge of the marking edge in practice is not material.

The plate *f*, as more clearly shown in Figs. 1 and 3, is provided with an overhanging flange $f^2$, serving as a guard to prevent the under fold of the goods from riding over the

marking edge of the plate, which said flange projects beyond the plate *f* at either end of the marking edge proper and at one side of the latter, thus insuring against any liability of the goods riding over the marking edge at any portion of its length. This said guard is more particularly adapted for use when wide tucks are being formed and the tuck in the under fold does not move in the space *h*, as shown in Fig. 4. The plate *f* is also formed or provided with an overhanging projection $f^3$ over the space or guideway *h* to insure the passage of the edge of the tuck in the under fold, when narrow tucks are being formed, through the latter.

Having thus set forth my invention, it will be obvious that the plate *f* may be formed or constructed in any suitable manner other than shown to secure the several requisite elements and be within the scope of my invention.

What I claim, and desire to secure by Letters Patent of the United States, is—

1. The combination in a tuck-marking attachment, with the supporting-frame, and two sliding plates, of a guide carried by one of said plates and a marking device carried by the other, the said marking device comprising a plate having an upturned or vertically-arranged portion forming a guide-wall, the said plate at the upper edge of such guide-wall being extended laterally in a horizontal direction and then upwardly to form a second guide-wall located at one side and above the plane of the first guide-wall, the upper edge of the second guide-wall forming a marking edge, and a movable plate for engaging with the latter, substantially as and for the purpose set forth.

2. The combination in a tuck-marking attachment, with the supporting-frame, and two sliding plates, of a guide carried by one of said plates and a marking device carried by the other, the said marking device comprising a plate having an upturned or vertically-arranged portion forming a guide-wall, the said plate at the upper edge of such guide-wall being extended laterally in a horizontal direction and then upwardly to form a second guide-wall located at one side and above the plane of the first guide-wall, the said plate being also provided with a forwardly-extending guard-flange or projection located above the second and upper guide-wall, and a movable plate for engaging with the upper edge of the latter, which forms a marking edge, substantially as described and for the purpose set forth.

3. The combination in a tuck-marking attachment, with the supporting-frame, and two sliding plates, of a guide carried by one of said plates and a marking device carried by the other, the said marking device comprising a plate having an upturned or vertically-arranged portion forming a guide-wall, which plate is extended laterally from the upper edge of the latter in a horizontal direction, then upwardly to form a second vertical guide-wall, and then horizontally again, the latter portion having a part thereof cut away so that a part of the upper edge of said second guide-wall will form a marking edge, and a movable plate for engaging with the latter, substantially as described and for the purpose set forth.

EDWIN J. TOOF.

Witnesses:
CHAS. F. DANE,
ANNIE L. HAYES.