May 29, 1962 H. J. BROWN 3,037,159

REGULATED POWER SUPPLY SYSTEM

Filed June 4, 1959

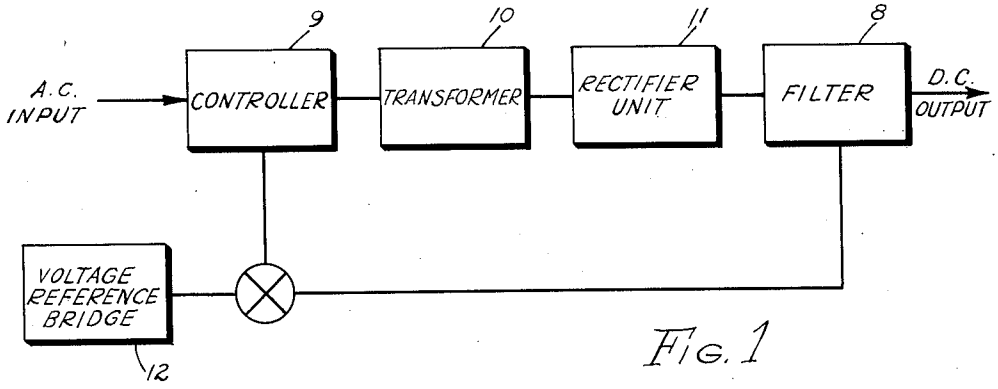

FIG. 1

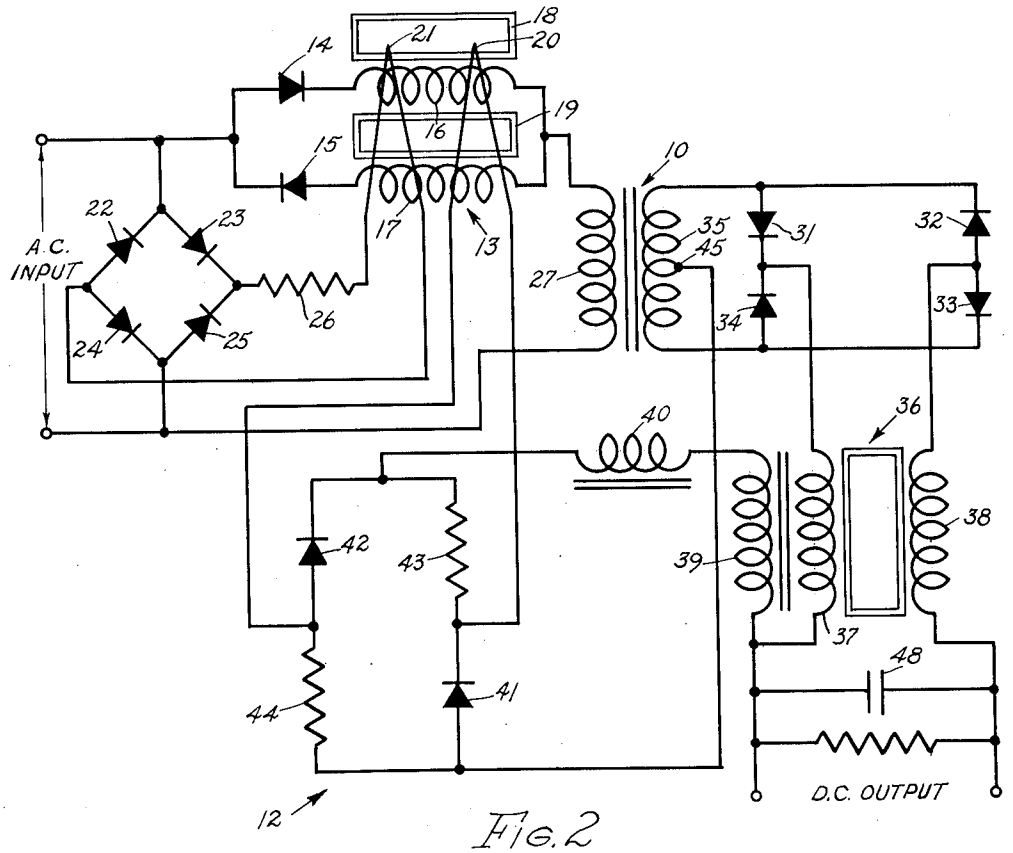

FIG. 2

INVENTOR.
HAROLD J. BROWN

BY

H. H. Losche
ATTORNEYS

United States Patent Office 3,037,159 Patented May 29, 1962

3,037,159

REGULATED POWER SUPPLY SYSTEM

Harold J. Brown, 6947 College Ave., Indianapolis, Ind.

Filed June 4, 1959, Ser. No. 818,232
3 Claims. (Cl. 321—18)
(Granted under Title 35, U.S. Code (1952), sec. 266)

The invention described herein may be manufactured and used by or for the Government of the United States of America for governmental purposes without the payment of any royalties thereon or therefor.

The present invention relates to a regulated power supply system and more particularly to a power supply system that will provide a constant direct current voltage output.

Many commercial and military devices require the use of reliable voltage regulated power sources capable of producing a constant D.C. output voltage under varying conditions of line supply voltage, frequency and environmental conditions. Various systems have been devised in the past to provide a regulated source of D.C. voltage. Many of these systems employ vacuum tubes or thyratron preamplifiers and consequently, cannot be subjected to very strenuous shocks or vibrations. Also, when a short time-constant system is desired, heretofore available systems become grotesque and unwieldly with characteristically low efficiency even at high loads.

The present invention provides a novel system for supplying regulated D.C. voltage and the apparatus is small and compact and provides fast response. An input of alternating current is applied to a magnetic amplifier controller, the output of which is fed to a transformer and then rectified. A reference voltage source comprised of zener diodes is provided and when the reference voltage is larger than the rectified voltage output the current in the reference voltage source bypasses the zener diodes and the magnetic amplifier controller has minimum holdback. On the other hand, when the reference voltage output is less than the rectified voltage output, the current will flow through the zener diodes and the magnetic amplifier controller has maximum holdback. The rectified voltage output is supplied to a filter choke having first and second equal windings. A third winding in the filter choke is provided and this winding is connected in series with a second choke. This second choke has an inductance just sufficient to maintain current flow in the zener diodes in the reference voltage source.

It is, therefore, a general object of the present invention to provide an improved system for controlling the rectified voltage to a load.

Another object of the present invention is to provide a voltage regulating system having a very fast response time.

Other objects and many of the attendant advantages of the present invention will be readily appreciated as the same becomes better understood by reference to the following detailed description when considered in connection with the accompanying drawing wherein:

FIG. 1 is a block diagram illustrating the principal components of the present invention; and

FIG. 2 is a schematic view embodying the present invention.

Referring now to FIG. 1 of the drawing, it can be seen that rectified current is supplied to a filter element **8** from an alternating current supply source through a circuit comprising a controller **9**, a transformer **10**, and a rectifier unit **11**. The transformer **10** is center-tapped and a voltage reference bridge **12** is connected to the center-tap of transformer **10** and to the filter element **8**. Referring now to FIG. 2 of the drawing, it can be seen that the controller **9** includes a magnetic amplifier

13 having diode elements **14** and **15** together with gate windings **16** and **17** which are wound, respectively, upon gapless magnetic cores **18** and **19**. Control winding **20** is wound on both cores **18** and **19**. Bias winding **21** is provided and is energized from the A.C. voltage source through rectifier elements **22** to **25**, inclusive, and bias resistance element **26**. The output of the controller **9** is connected to the primary winding **27** of transformer **10**. Rectifiers **31** to **34**, inclusive, are connected to the secondary winding **35** of transformer **10**. The secondary winding **35** is center-tapped and a voltage reference bridge **12** has one terminal connected to the center-tap of secondary winding **35**. An integrating filter reactor **36**, having equal windings **37** and **38** in opposite legs, is connected to the output of rectifiers **31** to **34**, inclusive. A control bridge winding **39** is provided and has one end connected to one output terminal, and a control circuit filter inductor **40** is connected in series between control bridge winding **39** and the voltage reference bridge **12**. The number of turns of control bridge winding **39** is equal to the number of turns of winding **37**.

Referring still to FIG. 2 of the drawing, it can be seen that the voltage reference bridge **12** is comprised of voltage reference elements **41** and **42** and resistors **43** and **44**. By way of example, the voltage reference elements **41** and **42** may be zener diodes. The resistors **43** and **44**, and voltage reference elements **41** and **42**, are connected in bridge relation, as shown in the drawing. Control winding **20** in controller **9** is energized by the voltage reference bridge **12** through the control circuit filter inductor **40** and the control bridge winding **39**. The voltage reference elements **41** and **42** are chosen such as to add up to one-half the desired output voltage.

Controller **9** is capable of maximum holdback when a negative current flows through control winding **20**. A positive control current flowing through winding **20** will cause a minimum holdback. Bias resistance element **26** is so chosen that the change in holdback occurs at zero control current, or when the voltage reference bridge **12** is in balance.

In operation, an alternating current voltage is applied to the input of the controller **9**. By way of example, and not of limitation, this A.C. voltage may be of the order of 115 volts and may vary between 95 and 150 volts. The controller **9** reduces this voltage to approximately 85 volts average and applies it to the primary winding **27** of transformer **10**. Transformer **10** steps up this voltage to 160 volts A.C. average value, and this stepped-up voltage is supplied to the rectifier unit **11** which in turn provides a direct current voltage having an average value of 160 volts. It is this direct current voltage that is to be maintained at a constant value even though the input voltage may be varying by as much as 30 percent.

The center-tap connection **45** from transformer **10** provides a direct current output of one-half the rectified output, or 80 volts, which is supplied to the voltage reference bridge **12**. When this 80 volts output exceeds by a small increment the sum of the voltage reference elements **41** and **42**, which in this example would be chosen to equal 80 volts, a large negative current will flow in the control winding **20** by virtue of the low resistance of the control path, and the magnetic amplifier **13** will provide maximum holdback. The current flow would be from center-tap **45** through voltage reference element **41**, through control winding **20**, then through voltage reference element **42** and control circuit filter inductor **40**.

When the output from the center-tap **45** of transformer **10** is slightly under the sum of the voltage reference elements, a positive current will flow through control wind-

ing **20** and the magnetic amplifier **13** will provide a minimum holdback. The current flow will be from center-tap **45** of transformer **10** through resistor **44**, then through control winding **20**, resistor **43** and control circuit filter inductor **40**, in that order.

Heretofore, control circuits that have been connected to the output of a regulated direct current power supply would oscillate at the natural frequency of the filter system. In the present invention, the introduction of the control bridge winding **39** eliminates the dynamical reaction of the filter system and yet the direct current voltage is transferred to the voltage reference bridge **12**. In order to maintain conduction in the voltage reference bridge over the entire alternating current cycle, the control circuit filter inductor **40** is provided. It can thus be seen that by deliberately reintroducing the alternating current component of the output voltage, and resuppressing it in a separate element, that absolute stability is achieved. Thus amplifiers, derivative circuits, and the like, are not necessary in order to obtain a very high degree of accuracy and stability.

A regulated power supply system has been built at the U.S. Naval Avionics Facility according to the principles of the present invention and this system has proven to be an extremely reliable one with a marked degree of stability. It has been shown that the system is capable of holding the direct current output so that it will not vary more than one-one hundredth ($\frac{1}{100}$) of a percent, even though the alternating current may be varying by as much as thirty (30) percent.

Obviously many modifications and variations of the present invention are possible in the light of the above teachings. Particularly it should be understood that the foregoing disclosure relates to only a preferred embodiment and that where values are set forth that these were intended for purposes of illustration and not of limitation.

What is claimed is:

1. A voltage regulator for supplying a constant direct current voltage output comprising: a source of alternating current, a controller connected to said source of alternating current and having a control winding for providing a variable holdback, first and second output terminals, rectifying means connected to the output of said controller for providing a direct current voltage output to said terminals, a filter having a first winding connected between said rectifying means and said first output terminal and a second winding equal in turns to said first winding and connected between said rectifying means and said second output terminal, voltage reference means connected between said first output terminal and said controller for selectively passing positive and negative current to said control winding, a control bridge winding equal in turns to the number of turns of said first winding connected between said first output terminal and said voltage reference means for stabilizing said voltage regulator, and a control circuit filter connected in series between said control bridge winding and said voltage reference means for maintaining conduction in said voltage reference means during the entire cycle of said alternating current.

2. A voltage regulator as set forth in claim 1 wherein said voltage reference means includes first and second zener diodes and first and second resistors connected in bridge relation.

3. A voltage regulator for supplying a constant direct current voltage output comprising: a source of alternating current, a magnetic amplifier connected to said source of alternating current and having a control winding wound on at least one gapless core for assisting and retarding the flux of said core, a power transformer connected in circuit with said magnetic amplifier and having a center-tap connection on the secondary winding thereof, first and second output terminals, rectifying means connected to the secondary winding of said transformer for providing a direct current voltage output to said terminals, a filter having a first winding connected between said rectifying means and said first output terminal and a second winding equal in turns to said first winding and connected between said rectifying means and said output terminal, voltage reference means having one input connected to said first output terminal and another input connected to said center-tap connection, the output of said voltage reference means being connected to said control winding of said magnetic amplifier for selectively assisting and retarding the flux of said core, a control bridge winding equal in turns to the number of turns of said first winding connected between said first output terminal and said voltage reference means for stabilizing said voltage regulator, and a control circuit filter connected in series between said control bridge winding and said voltage reference means for maintaining conduction in said voltage reference means during the entire cycle of said alternating current.

References Cited in the file of this patent

UNITED STATES PATENTS

2,653,293	Huge	Sept. 22, 1953
2,723,372	Eagan et al.	Nov. 8, 1955
2,858,499	Silver	Oct. 28, 1958
2,875,395	Blashfield	Feb. 24, 1959
2,914,720	Merkel	Nov. 24, 1959
2,945,172	Bixby	July 12, 1960
2,994,027	Bennett et al.	July 25, 1961