Dec. 28, 1965 E. I. WAGNER 3,226,063

JET AND ROCKET ENGINE BLAST AND SOUND SUPPRESSING MEANS

Filed July 14, 1964

Fig. 1.

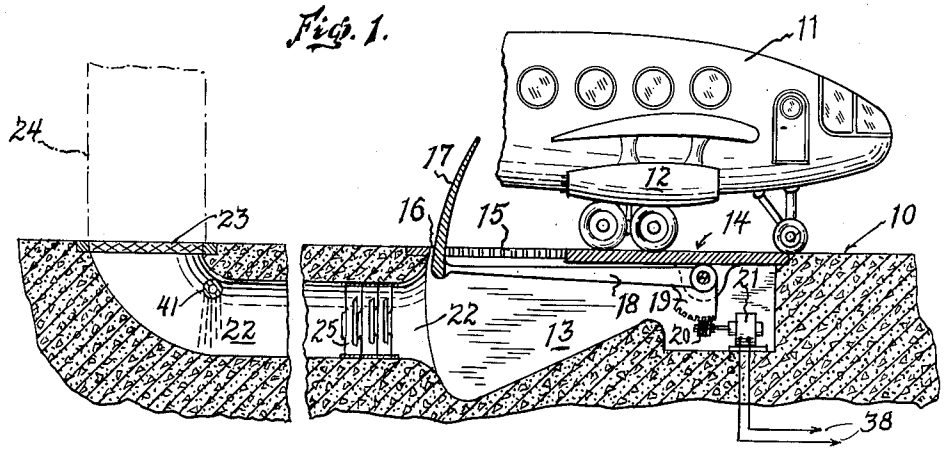

Fig. 2.

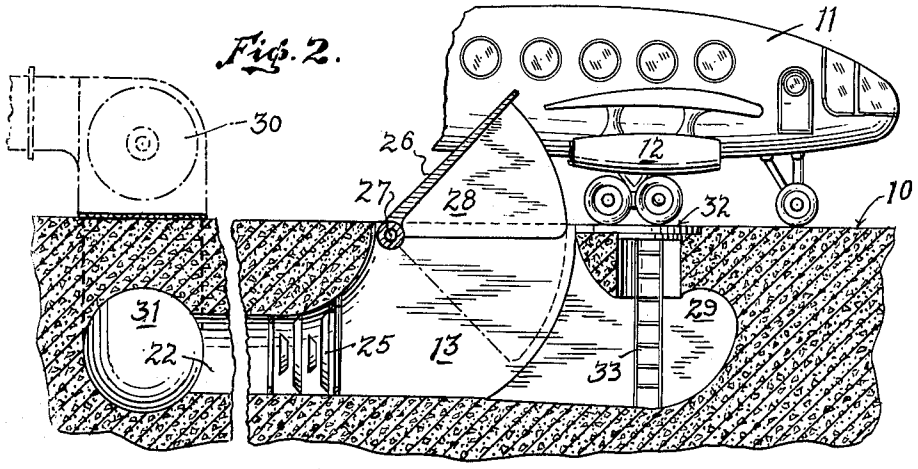

Fig. 3

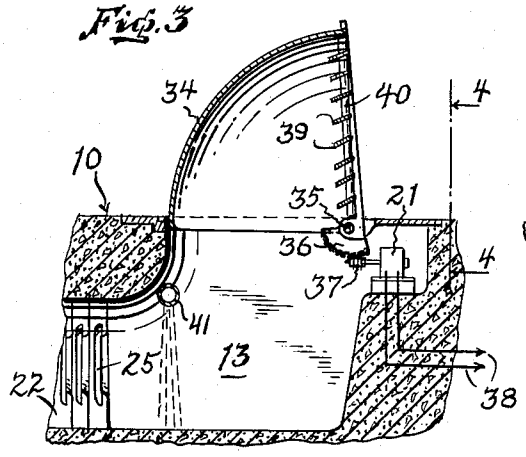

Fig. 4.

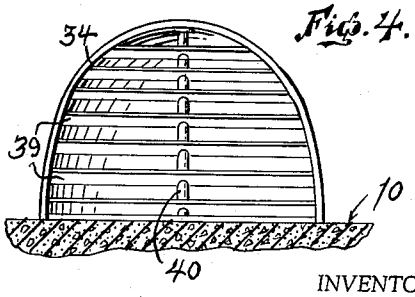

INVENTOR.
ELEANOR I. WAGNER.
BY
Wm. H. Atkinson
ATTORNEY

United States Patent Office 3,226,063 Patented Dec. 28, 1965

3,226,063

JET AND ROCKET ENGINE BLAST AND SOUND SUPPRESSING MEANS

Eleanor I. Wagner, 72765 Beavertail St., Palm Desert, Calif.

Substituted for abandoned application Ser. No. 198,326, May 28, 1962. This application July 14, 1964, Ser. No. 384,574

8 Claims. (Cl. 244—114)

My present invention relates to an airport facility and more particularly to a jet noise and blast suppressing means for use in running up jet engines of a jet propelled aircraft and is a substitute for my prior abandoned application S.N. 198,326, filed May 28, 1962, and entitled "Jet Engine Blast and Sound Suppressing Means."

An object of the invention is to provide a blast and sound wave intercepting means which may be employed to avoid and/or reduce other objectionable conditions now prevalent at airports located in close proximity to residential and like areas.

Another object of the invention is to provide a gas blast and sound wave intercepting means which may be installed and operated at various points about an airport during the running up period as is now generally practiced prior to putting the power plant of a jet propelled aircraft into flight.

A further object of the invention is to provide a blast intercepting and sound reducing means for use in testing and/or running up the jet engine of an aircraft which is in the form of an underground muffler arrangement in which the blast gases are exhausted below the surface of the airport and at a point remote from the aircraft.

Another object of the invention is to provide a gas blast intercepting and sound wave intercepting baffle in combination with a subterranean exhaust passageway that may be used as a means for warming up an airport runway surface as a means for preventing the accumulation of ice and snow thereupon as often occurs in some areas during the winter months.

Other objects and advantages will be in part evident to those skilled in this art and in part more particularly pointed out hereinafter in the following description taken in connection with the accompanying drawing wherein there is shown by way of illustration and not of limitation preferred embodiments of the invention.

In the drawing:

FIGURE 1 is a vertical fragmentary and sectionalized view showing my invention with a blast fence similar to that disclosed and claimed in my prior patent,

FIGURE 2 is a similar fragmentary view showing a modified form of the invention,

FIGURE 3 is a fragmentary sectional view showing a further modification of the invention, and

FIGURE 4 is a view looking in direction of arrows along line 4—4 of FIGURE 3.

With the advent of jet propelled aircraft there has developed a necessity for longer runways at airports and often these extensions have encroached upon residential areas, where due to the increase in noise incidental to the operation of jet aircraft there has developed a considerable objection to this noise by the citizenry of many communities. As a solution of the problem of excessive noise during the required run-up period many airports have installed different types of so-called blast fences which of necessity are located along the border line of the airport area. These fences are generally only high enough to intercept the blast and being stationary the aircraft to be run up must be maneuvered into blast intercepting relationship with these fences and as a result the aircraft must be backed into position by a towing vehicle. While the present blast fences do prevent some of the objetcionable blast from escaping to the surrounding area there still remains an objectionable amount of noise and turbulence and the best present solution appears to be an extremely high fence. Many newly developed areas that are rapidly springing up around and about airport areas which in the early days, due to the cost of land, were generally located at the outskirts of large metropolitan areas and with the increase in population in the suburban areas a reduction of the annoyance to these communities is therefore a problem which must be considered and solved, otherwise future airports will have to be located miles from the centers of population.

In my prior Patent No. 3,017,146, granted January 16, 1962, and entitled "Jet Engine Blast Fence," I have shown and claimed a blast intercepting baffle or fence that can be installed at any point upon an airport surface and over which an aircraft can be moved into jet blast intercepting relationship without requiring any backing or other complicated maneuvering of the aircraft into an effective run-up position with respect to the fence. While these devices are effective as a blast intercepting means they have been found to fall short of a solution to the excessive noise problem. It is therefore a primary object of my present invention to provide a combined blast and sound wave intercepting means by which the sound wave producing blast of a jet engine is directed into a subsurface chamber with subterranean sound muffling means and exhausted remote from the area in which the jet engine is operating.

For a more detailed description of the invention reference is now made to the accompanying drawing wherein like numerals refer to like parts throughout the several views.

In the several figures of drawing the numeral **10** designates generally an airport surface over which jet and other type planes **11** are operated. In the FIGURES 1 and 2, the plane **11** is shown as having a jet type engine **12** only one of which is here shown. It is therefore to be understood that where more than one jet engine **12** is located at opposite sides of the aircraft one or more of my proposed blast and sound intercepting devices may be positioned at points to align with the engines at the opposite sides of the aircraft. In this figure, the airport surface **10** is shown as having subsurface chamber **13** over which there is a platform **14** having a portion of its leading edge in the form of an open grill like structure **15** over which an aircraft may move. At the outer edge of the grill-like structure **15** there is an open laterally extending slot **16** through which an arcuate baffle or fence-like member **17** is adapted to move to its operative position as here shown or into an inoperative position within the subchamber **13**. In this arrangement, like that disclosed in my prior patent, the baffle number **17** is carried by a crank arm **18** that has a gear sector **19** which engages a worm gear **20** that is driven by an electric motor or other means **21**. The subsurface chamber **13** is of sufficient capacity to receive any normal blast of gas without creating a back pressure and extending horizontally therefrom there is a subterranean tunnel **22** which may be of any length that will be determined by the point of final exhaust of the blast of hot gasses to the atmosphere. In this showing the outlet or discharge end of the subterranean tunnel **22** is shown as having a protective grill **23** thereover, but as an alternative a stack **24** of any desired height might be positioned over this exhaust outlet to discharge the hot gasses and other debris into the atmosphere at a level above the airport surface. While the subsurface chamber **13** with the blast intercepting baffle or fence **17** and the subterranean tunnel **22** leading therefrom will operate to a degree as a sound controlling means, particularly where the subterranean tunnel **22** is of some considerable length or is extended in a tortuous path beneath a runway as a means for warming up

the surface for a more effective sound suppressing performance my invention contemplates the installation of a sound wave intercepting means or muffler **25** within the subterranean tunnel **22**. As for the muffler **25**, it is to be understood that the showings and locations thereof as here presented are purely diagrammatic and that the type or design of muffler is of no particular moment except that it should operate to reduce the sound generated by the jet blast to a tolerable level.

Reference is now made to FIGURE 2 of the drawing, wherein there is shown a blast intercepting baffle **26** that is pivotally mounted upon an operating shaft **27** located at the leading edge of the subsurface chamber **13**. This shaft **27** may be operated to raise the baffle **26** into its operative position by an electric motor as shown in FIGURE 1 of the drawing. In this instance the baffle **26** has depending skirt-like sides **28** so that when the baffle **26** is elevated as shown it will be in the form of an inverted scoop-like structure which will operate to direct the blast of hot gasses from the jet engine **12** into the chamber **13** and when lowered form a cover for the chamber over which an aircraft may freely move. The chamber **13** is also shown as having a forward extension or reverberation chamber **29** which will allow for expansion of the blast gases. This chamber **29** is provided with a manhole cover **32** and a ladder **33** through which access may be had for the purpose of removing any debris or soot deposit which may accumulate therein. At the other end of the subterranean tunnel **22** there is a suction type blower **30** which is adapted to create a reduced pressure within the chamber **13** that will operate to draw an additional amount of cool free air from the surrounding intake area that will cool and chill the blast of gas and thus help to improve the sound muffling effect of the baffle **26**. While the blower **30** is here shown and described as connected to a lateral manifold conduit **31** into which any number of the subterranean tunnels **22** may be connected, it is conceivable that a blower **30** may be associated with each of the subterranean tunnels **22**. In this arrangement unlike that shown in FIGURE 1 of the drawing, the baffle **26** of itself, when in its inoperative position, will be flush with the airport surface and thus form a platform over the subsurface chamber **13** over which the aircraft may move and as a result there is no need for a protective grill over the open top of the chamber **13**. When a number of these sound intercepting baffles are used with at least one such baffle on each side of the airplane body the subterranean tunnels **22** may exhaust independently of each other, but in a larger installation it is contemplated that a number of these subterranean tunnels **22** may terminate in the laterally extending manifold type conduit **31** under the airport surface that will exhaust the gasses into the atmosphere or thorugh the blower **30** at a point far removed from the warming up area of the airport.

Reference is now made to FIGURES 3 and 4 of the drawing showing a further modified form which the blast fence and sound wave intercepting baffle may take. In this arrangement the baffle or fence designated by the numeral **34** is in the form of a semi-spherical clam shell shaped hood that is pivotally mounted upon a shaft **35** at the trailing side of the open topped subsurface chamber **13**. In this instance the hood **34** carries a worm gear sector **36** which is in mesh with a worm **37** that is driven by the motor **21**. At this point it should be stated that the motor **21** is shown as having conductors **38** that will be connected through a suitable control switch with a source of electric power. Such a control switch may be operated either manually or through an automatic treddle switch as indicated in my prior patent. In this instance the subsurface chamber **13** is contoured to accommodate the baffle **34** and the face or open side of the hood-like baffle **34**, has a series of spaced louvers **39** which provide a grill-like supporting surface flush with the airport surface **10** over which a plane may move when the hood is in its inoperative position. In this instance the spaced louvers **39** are shown as having a reinforced stay **40** intermediate their ends.

When elevated into their operative positions the several baffles or blast intercepting members **17**, **26** and **34** will act to intercept and direct the blast of hot gases from the jet engine downwardly into the subsurface chambers **13** associated therewith. When the muffler arrangements are employed as here shown, the resultant sound producing compressional waves and the blast of gas from the jet engine will be directed to the subterranean tunnel **22** and coincidentally should a suction type blower **30** or other means be connected to the tunnel **22** a further sound reducing effect will result from the admixture of the hot blast gases with the inducted flow of fresh air sucked into the chamber **13** and the tunnel **22** by the blower **30**.

With the arrangement as above described it will be apparent that in addition to muffling the sound in terms of decibel units and avoiding turbulence above the airport surface my invention also provides a means by which the energy of the jet may also be converted to further useful purpose. For example, by extending the subterranean tunnels **22** into a grid configuration the heat of the jet blast might be used to raise the temperature of the runway surface during the winter months with the result that an accumulation of ice and snow could be avoided. As a further imrpovement I have in FIGURES 1 and 3 of the drawings shown the subterranean tunnel **22** and the chamber **13** as having a means providing a fine spray or curtain of water **41** that will function to settle and prevent any soot from being exhausted from the tunnels **22** and settling in the surrounding neighborhoods.

While I have, for the sake of clearness and in order to disclose my invention so that the same can be readily understood, described and illustrated specific forms and arrangements, I desire to have it understood that this invention is not limited to the specific forms disclosed, but may be embodied in other ways that will suggest themselves to persons skilled in the art. It is believed that this invention is new and all such changes as come within the scope of the appended claims are to be considered as part of this invention.

Having thus described my invention, what I claim and desire to secure by Letters Patent is:

1. In a gas blast and sound wave suppressing means for the jet engine of a stationary aircraft with the jet operating in a horizontal plane over an airport area, the combination of an airport area having an open top subsurface chamber over which a jet propelled aircraft may be positioned, an inverted scoop-like jet blast intercepting baffle normally located within said chamber at the open top of said chamber, means adapted and arranged to elevate said blast intercepting baffle from an inoperative position within said chamber to blast and sound wave intercepting relationship for directing the blast of a jet engine into said chamber, a subterranean tunnel leading from said chamber and under the airport area through which the blast of gas from the jet engine is exhausted from said chamber at a point removed from said chamber, and characterized by the fact that said blast intercepting baffle will form a cover over said chamber when in its inoperative position within said chamber.

2. In a gas blast and sound suppressing means for use with a stationary jet engine running up at an airport, the combination of an airport area having a subsurface chamber with an open top at the surface of an airport area, a horizontally directed blast intercepting baffle means located in an inoperative position at the open top of said subsurface chamber for directing a blast of gas from a jet engine downwardly and into said chamber, a subterranean tunnel leading from said chamber to a remote point through which the blast from a jet engine entering said chamber will be exhausted at a point remote from said chamber, means adapted and arranged to move said blast intercepting baffle means from its inoperative position within said chamber to an operative blast and sound

wave intercepting position above said subsurface chamber, characterized by the fact that said blast intercepting baffle means, when in in its inoperative position will form a closure for said subsurface chamber over which an aircraft may move and a sound muffling and hot gas cooling means mounted within said subterranean tunnel.

3. In a hot gas blast and sound wave suppressing means for aircraft having a plurality of jet or rocket engines with jets operating in a horizontal plane parallel with an airport area, the combination of an airport area having a plurality of subsurface chambers, blast intercepting means for directing the exhaust of a jet engine into each of said subsurface chambers, an independent subterranean tunnel leading from each of said chambers to a point remote from said blast intercepting means through which the blast from the jet engine will be discharged from said subsurface chambers, and a laterally extending tunnel forming a manifold conduit to which each of said independent subterranean tunnels are connected for exhausting the hot gases from said chambers at a common point remote from said aircraft.

4. The invention as described in claim 1, characterized by the further fact that said blast intercepting baffle is in the form of an inverted flat bottom scoop pivotally mounted at the leading side of said subsurface chamber with pending arcuate sides which when in its inoperative position will cover and close the entire area of the opening into said subsurface chamber and when in its operative position will direct the blast of the jet engine into said subsurface chamber.

5. The invention as defined in claim 1, characterized by the further fact that said blast intercepting baffle is in the form of a semispherical hood pivotly mounted at the trailing side of said chamber and having louvers over its open blast intercepting side forming a support over which an airplane may move when said means is in its inoperative position.

6. In a jet engine blast and sound suppressing means for airports, the combination of an airport area having an open top subsurface chamber, blast intercepting means

for directing the exhaust of a jet engine into said subsurface chamber, an independent subterranean tunnel leading from said subsurface chamber to a point remote from said blast intercepting means through which the blast of gas from the jet engine is conducted from said subsurface chamber, and means operating independently of said blast of jet gases for maintaining an induced circulation of hot jet gases and a flow of surrounding air through said subterranean tunnel, whereby the blast of hot gases of the jet will combine with the induced flow of free cool air sucked in and circulating through said chamber and the subterranean tunnel by said last means.

7. The invention as defined in claim 3, characterized by the fact that said subterranean tunnels have means associated therewith and forming a water curtain to separate soot and heavy particles from said blast.

8. The invention as set forth in claim 6, characterized by the fact that the independent subterranean tunnel leading from said subsurface chamber is extended and disposed in a grid-like pattern beneath a runway of the airport, whereby heat of the gas jets collected in said subsurface chamber will heat the runway to prevent the accumulation of ice and snow and/or dry the runway following a rainy spell.

References Cited by the Examiner

UNITED STATES PATENTS

2,358,868	9/1944	Marx	98—115
2,674,335	4/1954	Lemmerman	244—114
2,692,024	10/1954	Burdett et al.	244—114
2,733,668	2/1956	Pfetzing	244—114
3,017,146	1/1962	Wagner	244—114

FOREIGN PATENTS

1,186,310	2/1959	France.

MILTON BUCHLER, *Primary Examiner.*

L. C. HALL, *Assistant Examiner.*