Patented Feb. 7, 1928. 1,658,686

UNITED STATES PATENT OFFICE.

ENOS LAWRENCE MORY, OF BOYERTOWN, PENNSYLVANIA, ASSIGNOR TO BOYERTOWN BURIAL CASKET CO., OF PHILADELPHIA, PENNSYLVANIA.

FASTENING DEVICE FOR METAL BURIAL CASKETS.

Application filed June 5, 1926. Serial No. 113,970.

This invention relates to spring influenced fastening and releasing devices, and more particularly to lid and panel fastening devices for metal burial caskets. The principal object of the invention is the provision of a releasable locking device particularly designed for metal burial caskets, whereby the main closure lid and auxiliary panel therefor may be detachably secured to the casket body with a minimum of effort, and readily released therefrom upon grasping the finger piece member associated with the device, to raise and remove a panel or closure lid from a metal burial casket.

Another object of the invention is to provide a fastening device as specified, which will detachably secure a closure lid or panel to a burial casket body, automatically upon bringing the fastening elements into engagement.

Other objects of the invention will appear in the following detail description, and in the accompanying drawings wherein:—

Figure 1 is a fragmentary cross sectional view of a metal burial casket showing the fastening device in its two forms, as applied to the panel and main closure lid.

Figure 2 is a top plan view of the panel securing latch per se.

Figure 3 is a longitudinal section through the same on the line 3—3 of Figure 2.

Figure 4 is a side elevational view of the panel securing latch per se in open released position.

Figure 5 is a top plan view of the closure lid securing latch per se.

Figure 6 is a side elevational view of the same with its extended position shown in dotted lines.

Figure 7 is an end view of the closure lid securing latch.

Referring more particularly to the drawing, 1 designates in its entirety, the metal burial casket with the main closure lid 10 and the auxiliary closure panel 11 in position thereon. The fastening device for detachably securing the auxiliary panel 11 to the closure lid 10 at a plurality of spaced points thereon, consists of a latch plate 12 for carrying the latch mechanism A and said plate 12 adapted to be inserted in the auxiliary panel 11 by means of a suitable slot or opening 13 which is cut into the panel 11 from the outer edge thereof for placing and suitably securing said latch plate 12 on the upper surface of the inwardly extending flange 14 formed about the bottom edge of the panel 11. The latch mechanism generally indicated at A, and pivotally carried by the latch plate 12, comprises a finger piece member 15 which is pivoted to said latch plate 12 by means of a pair of spaced upstanding ears 16 which are centrally formed on the plate 12 at the outer end thereof. The inner free end of the member 15 is adapted for pivotally receiving a latch member 17 which depends from the free end of the member 15 to which it is pivoted through the latch plate 12, by means of a rectangular slot 18 formed centrally in said plate and adjacent the inner end thereof. The latch member 17 is provided at its pivoted upper end with an integrally formed angularly extending foot 19 and said foot adapted to contact centrally on the inner edge portion of the latch plate 12 when the finger piece member 15 is raised and thereby rock the latch member 17 into an angular and inwardly extended position, as shown in Figure 4. By raising the finger piece member 15 the hook formed lower end 20 of the pivoted latch member is released out of engagement with the underside of the inwardly extending lip 21, which is provided therefor on the upper panel engaging edge of the closure lid 10.

A suitable coiled spring 22 is carried by the pivot pin 23 with one end of said spring engaging on the underside of the member 15 and the other end adapted for hooking engagement on the angularly extending foot 19 for returning said latch member into its normal fastening position.

Upon examination of Figure 1, of the drawing, it will be readily seen that when the outwardly extending end of the member 15 is raised for lifting the panel 11 at one side thereof, the latch member 17 will be actuated into the position shown in Figure 4, and thereby release the panel from the closure lid 10.

A modified form of the fastening device herein first described, is employed for securing the main closure lid 10 to the metal burial casket body 1, in the manner also shown in Figure 1 of the drawing, and consists of a similar latch plate 24 which is positioned on and suitably secured to the upper surface of the inwardly extending flange 25 formed on the bottom casket body joining side of the closure lid 10. The latch

members on the inwardly extended ends thereof, a slot provided in each of said plates for extending said latch members therethrough in a depending manner, spring means carried by said releasing and latch members for the retention thereof in a normally latched position, laterally projecting means provided on the lower end of said latch members for engaging the upper inwardly extending lip of said closure lid for anchoring said panel thereto, and angularly extending means formed integrally with said latch members for engaging on said attaching plates and actuating said latch members inwardly into a releasing position upon the operation of said releasing members.

In testimony whereof I affix my signature.

ENOS LAWRENCE MORY.

Feb. 7, 1928.

J. W. OOSTERINK ET AL

1,658,687

SHOCK FORMING ATTACHMENT FOR HARVESTERS

Filed Oct. 23 1925

5 Sheets-Sheet 1

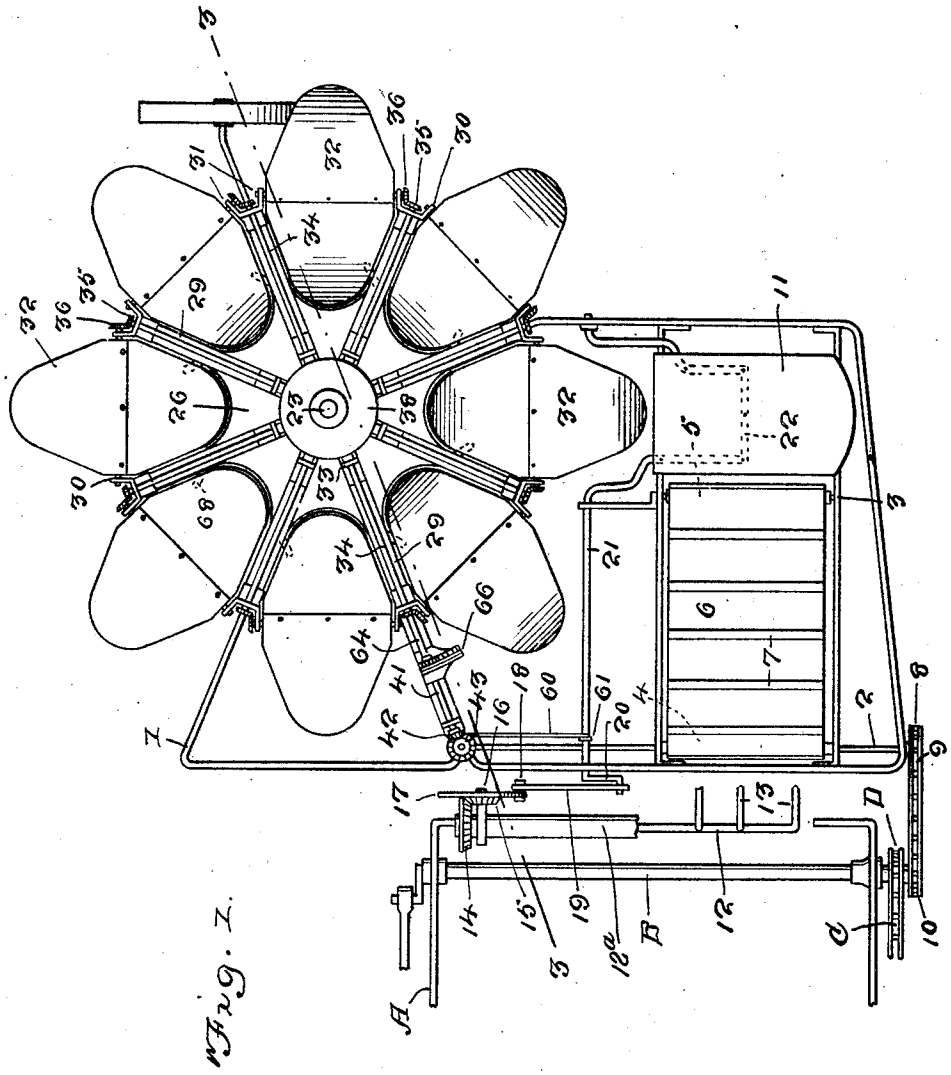

Fig. 1.

E. R. Ruppert.

WITNESS:

J. W. Oosterink
F. J. Rowland
INVENTOR

BY Victor J. Evans

ATTORNEY