(No Model.)

G. H. REYNOLDS.

CONTROLLING DEVICE FOR ELEVATORS.

No. 456,122. Patented July 14, 1891.

Fig. 4.

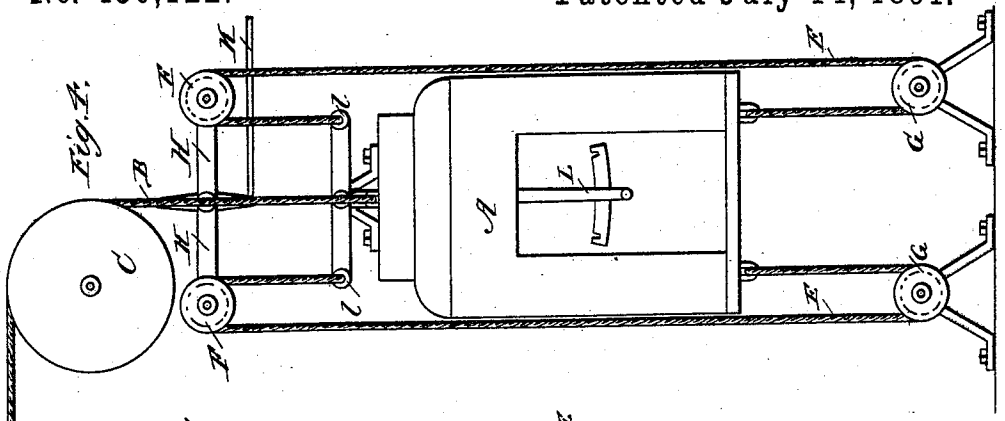

Fig. 3.

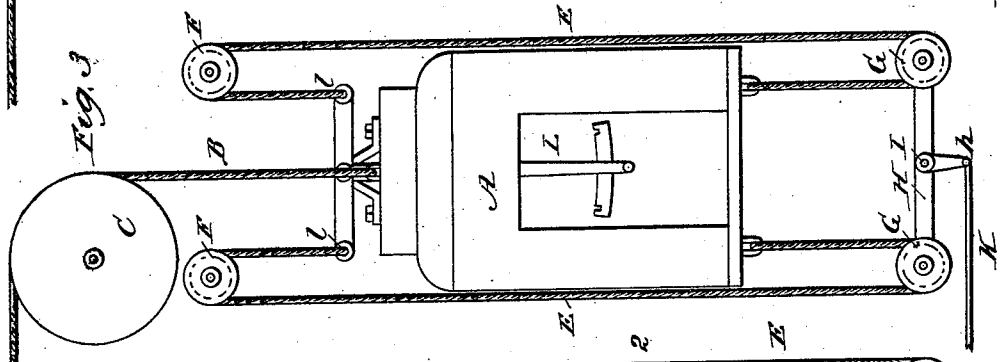

Fig. 2.

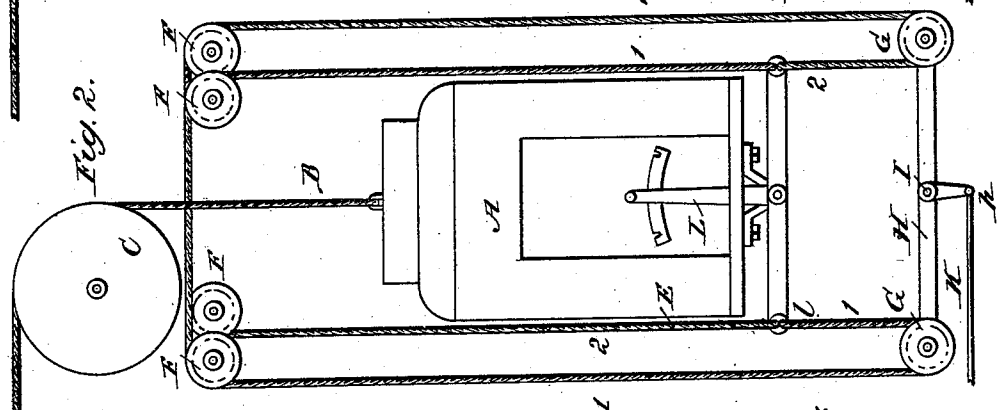

Fig. 1.

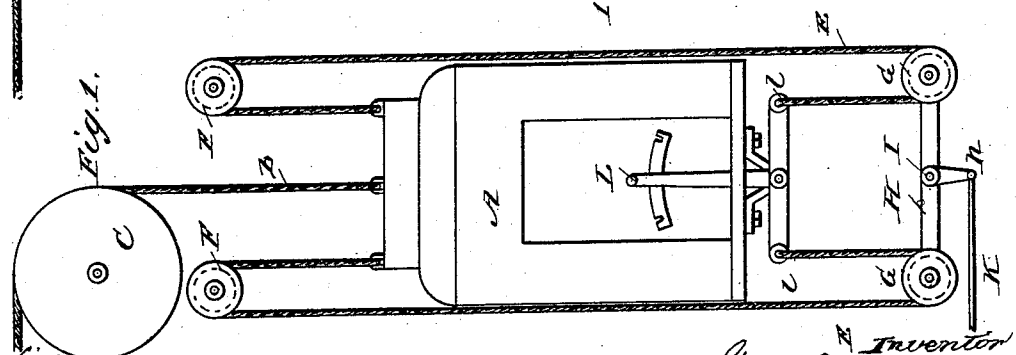

Witnesses.
H. Rossiter
J. S. Veeder

Inventor
Geo. H. Reynolds
By J. R. Raymond
Atty.

THE NORRIS PETERS CO., PHOTO-LITHO., WASHINGTON, D. C.

UNITED STATES PATENT OFFICE.

GEORGE H. REYNOLDS, OF NEW YORK, N. Y., ASSIGNOR, BY MESNE ASSIGNMENTS, TO THE NATIONAL COMPANY, OF ILLINOIS.

CONTROLLING DEVICE FOR ELEVATORS.

SPECIFICATION forming part of Letters Patent No. 456,122, dated July 14, 1891.

Original application filed January 26, 1887, Serial No. 225,538. Divided and this application filed June 29, 1887. Serial No. 242,858. (No model.)

To all whom it may concern:

Be it known that I, GEORGE H. REYNOLDS, of the city, county, and State of New York, have invented certain new and useful Improvements in Means for Controlling the Operation of Elevators, of which the following is a full specification.

In Letters Patent of the United States granted to me on the 5th day of May, 1887, No. 317,202, is set forth means for operating the controlling device of an elevator from the cage, whereby said controlling device is shifted by the action of suspended weights and flexible means whereby one or the other of the weights is caused to exert a preponderating influence upon said device, said flexible means being in the form of two suspended cables traveling with the cage passing in bights around pulleys connected with the controlling device and tightened and relaxed by means of an operating device upon the cage.

The object of my invention, hereinafter set forth, is to shift the controlling device through the medium of like flexible means to those described in my aforesaid Letters Patent; but to secure the various adjustments or movements of the controlling device more positively than they can be effected through the medium of independent weights, to which end I make use of two suspended cables traveling with the cage and of means whereby the bight of each cable may be positively contracted and released, one cable being tightened as the other is relaxed and the operations upon both cables being effected from the movement of a single operating device upon the cage.

My improvement may be carried out through the medium of cables suspended in different ways and connected in different ways to travel with the cage and of different operating devices for positively contracting and relaxing the bights of the cables to operate controlling devices of different kinds, and in the accompanying drawings I have illustrated several of the different arrangements and connections and constructions that may be employed.

In said drawings, Figures 1, 2, 3, and 4 each illustrate in side elevation sufficient of an elevator apparatus to exemplify my improvement, the engine-guides and other parts not immediately connected with the features embodying my invention being omitted.

The cage or platform A is connected with an operating-engine of suitable character—as, for instance, a winding engine or piston—through the medium of a hoisting-cable B, passing over a guide-pulley C, said engine being provided with the controlling device in the shape of a valve, belt-shifter, switch, &c., according to the character of the engine.

The shifting of the controlling device is effected from the cage by the operator through the medium of an operating device L, (shown in the form of an arm connected with the shaft of a cross-lever *l l*,) and the movements of the operating device are imparted to the controlling device through the medium of two cables E E, passing around guide-pulleys F G and connected in any suitable manner to travel with the cage. The connection of the cables may be directly with the cage or with an attachment to the cage, or each cable may be attached to one end directly to the cage and at the other end to a part carried by the cage; but in any case the connection and arrangement must be such that by the operation of the device upon the cage the bight of one cable is contracted positively when the other is relaxed, to thereby impart positive movement.

In the construction illustrated in Figs. 1, 2, and 3 the pulleys G G are carried by a lever H, pivoted at I and provided with an arm *h*, connected with a rod K, leading to the controlling device by means of which the movements of the engine are controlled so as to stop, start, or reverse the movements of the cage. In said figures the lever H is at the bottom of the well, while in Fig. 4 the said lever is at the top of the well, the stationary pulleys in such case being at the bottom of the well.

In Figs. 1, 3, and 4 each cable is connected at one end positively and directly with the cage and at the opposite end to one end of the cross-lever *l l* of the operating device

upon the cage, the said lever being below the cage in Fig. 1 and above the cage in Figs. 3 and 4.

When the operating-lever occupies the position shown in Fig. 1, the controlling device will be in its mid-position to arrest the movement of the cage, and said controlling device can be positively shifted in either direction to start the cage upon its upward or downward course by swinging the operating-lever in one direction or the other. The effect of the movement of the lever in either direction from its mid-position is to positively contact the bight of one cable and relax that of the other, thereby effecting an upward draft upon one of the pulleys G and carrying upward one end of the lever H, while a reverse movement of the lever will relax the cable first drawn upon and tighten the other cable, contracting the bight thereof and raising the other pulley. It will be evident that these movements may be effected whatever may be the position of the cage in the well, whether it is at rest or moving in either direction, and that the movements are absolutely positive in their character, leaving no opportunity for accidents resulting from uncertain action of any of the parts, the sticking of the valve, and yielding of the connections or otherwise.

In the construction shown in Fig. 2 each cable is connected at one end to one end of the operating-lever, and after passing over upper guide-pulleys and then down and around one of the lower pulleys G is connected at the opposite end to the other end of said lever. As a result of this connection the movement of the operating-lever will contract positively the bight of one of the cables while relaxing that of the other; but the movement required will be only half of that needed in the construction shown in the other figures. Thus if the right end of the lever *l l* is thrown downward the right end of the section 1 of the flexible operating means will be carried downward while the left end of said section 1 will be carried upward to the same extent, thereby duplicating the extent of movement imparted to the left-hand pulley G, the same movement relaxing the section 2 of the cable to a like extent.

Without limiting myself to the precise construction and arrangement of parts shown and described, I claim—

1. In a controlling device for elevators, the combination of a car, two cables attached positively at each of their ends to travel with the car and connected with the controlling device, and an operating device upon the car to positively take up and pay out said cables to shift positively the controlling device, substantially as set forth.

2. In controlling devices for elevators, the combination of a car, traveling cables connected positively at each of their ends to the car and passing over stationary pulleys at one end of the well and around movable pulleys connected to the controlling device at the other end of the well, and means for positively contracting and relaxing the bights of the cables, substantially as set forth.

GEO. H. REYNOLDS.

Witnesses:
J. H. RAYMOND,
J. I. VEEDER.