Oct. 12, 1948. H. T. COSS ET AL 2,450,916

APPARATUS FOR FORMING MINERAL WOOL MATS

Filed Sept. 30, 1944

Fig. 2.

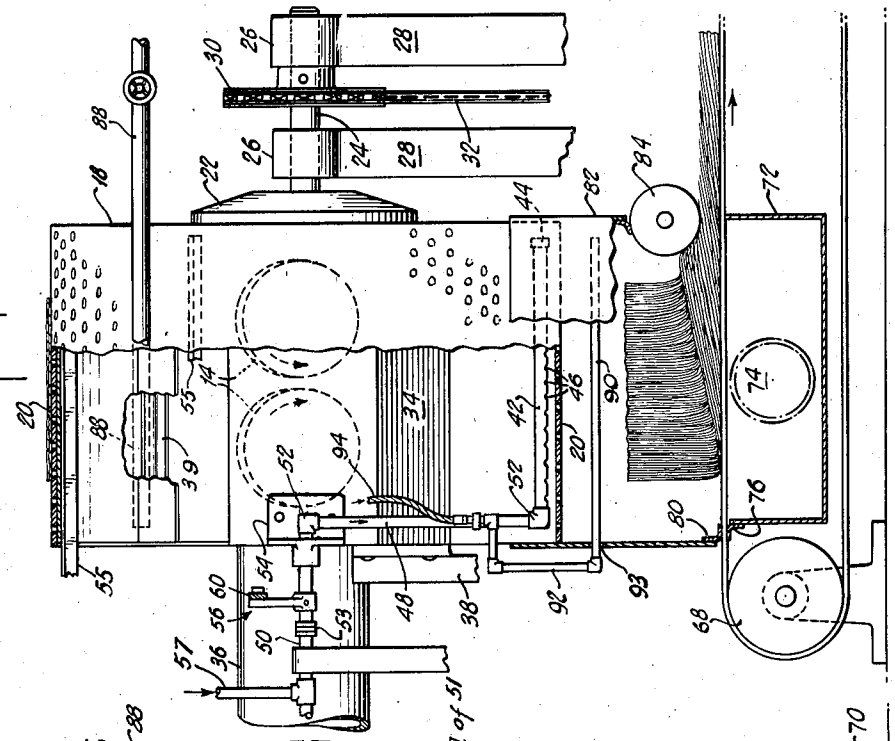

Fig. 1.

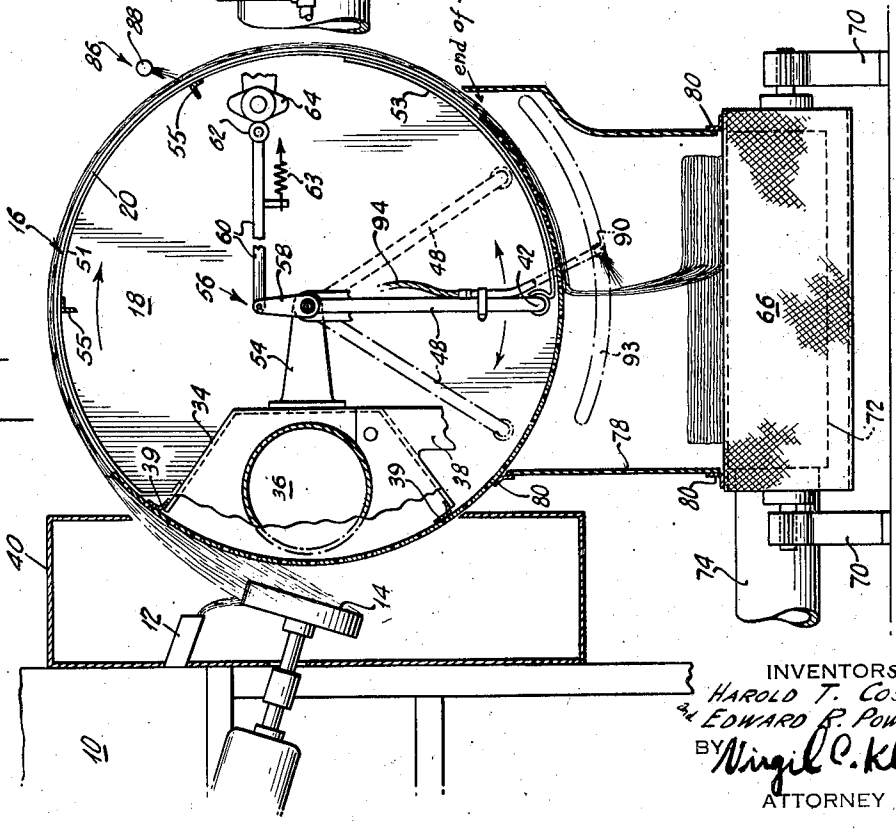

INVENTORS
HAROLD T. COSS
& EDWARD P. POWELL.
BY Virgil C. Kline
ATTORNEY

Patented Oct. 12, 1948 2,450,916

# UNITED STATES PATENT OFFICE

2,450,916

## APPARATUS FOR FORMING MINERAL WOOL MATS

Harold T. Coss, Plainfield, and Edward R. Powell, North Plainfield, N. J., assignors to Johns-Manville Corporation, New York, N. Y., a corporation of New York

Application September 30, 1944, Serial No. 556,562

12 Claims. (Cl. 154—27)

1

Our present invention relates to the manufacture of mineral wool, and especially to an apparatus and method for forming an improved mat or felt of mineral wool or similar fibers. The term "mineral wool" is employed herein in a generic sense to include wool or fibers formed from rock, slag, glass, mixtures thereof, and like raw materials.

The invention has for its principal object the provision of an improved method and apparatus for collecting mineral wool fibers coincident with their formation and is particularly directed to a method and apparatus for collecting a thin layer of fibers in a fiber-forming zone and depositing a plurality of said layers on a receiving member to build up a blanket of commercial thickness and width, all as a continuous operation. The invention is especially adapted for operation in conjunction with rotor-type fiberizing apparatus in which molten material impinges against a rotor driven at high speed and is broken up into drops or masses which are thrown from the rotor by centrifugal force and drawn out into fiber or thread form.

Another object of the invention is the provision of a method and apparatus for forming an improved mat or felt of spun mineral fibers.

A further object of the invention is the provision of a method and apparatus for procuring substantially uniform dissemination of a binder or other treating material throughout a felt or mat of the type referred to above.

Briefly stated, the invention in its preferred embodiment resides in a method and apparatus for collecting fibers, produced by a spinning process, substantially immediately after their formation on a rotatable drum in the form of a thin layer, conveying the layer on the drum to a position above a conveyor traveling in a direction generally parallel to the axis of the drum, and depositing the layer on the conveyor in continuous folds or laminations laid laterally of the conveyor. The travel of the conveyor is regulated relatively to the rate of removal of the layer from the drum to build up a felt or blanket of the desired thickness. The width of the blanket in turn may be determined by controlling the lengths of the folds or laminations laid across the conveyor. A binder or other treating material, where such is desired, is applied to both sides of the thin layer prior to its deposition on the conveyor.

Our invention will be more fully understood and further objects and advantages thereof will become apparent when reference is made to the more detailed description thereof which is to follow and to the accompanying drawings, in which:

2

Fig. 1 is a diagrammatic side elevational view, with parts broken away for clearness of illustration, of an apparatus in accordance with the invention; and

Fig. 2 is a diagrammatic end elevational view, with parts broken away and other parts in section, of the apparatus of Fig. 1.

Referring now to the drawings, there is shown an apparatus comprising a fiber-forming means including a raw-material-melting furnace 10, suitably of the cupola type, as illustrated. Furnace 10 has a discharge trough 12 by which a stream of molten slag, rock, glass, or other fiber-forming material is drawn from the furnace and is discharged in a position to be contacted by one or more rotors 14 driven at high speed by suitable means (not shown). The molten material striking the rotor or rotors is broken up into fine drops, which are thrown out from the rotors at high velocity and converted into fibers.

It will be understood that the invention now to be described may be employed with other fiber-forming means than that described above, although it is particularly adapted for cooperation with the rotor type fiberizing operations.

In accordance with the instant invention, a drum 16 of relatively large diameter is mounted for rotation in the direction indicated by the arrow. The drum is located to have a portion of its peripheral surface adjacent to the fiberizing rotors 14. The surface of the drum is made up of a foraminous material, such as perforated metal, relatively coarse mesh screen, or the like. Metal sheets having perforations approximately one inch in diameter and substantially uniformly spaced on 1¼" centers have been successfully employed to form the drum wall. The drum is supported for rotation in a suitable manner to permit of the inclusion within the drum of a suction hood and other means to be described. For this purpose the drum as shown includes a relatively rigid end structure or wall 18 which carries the foraminous peripheral wall 20. The end plate 18 is secured as by element 22 to a shaft 24 to rotate therewith. Shaft 24, mounted for rotation within bearings 26 of supports 28, is adapted to be driven at high speed by a suitable prime mover or other drive means (not shown) through the medium of a sprocket 30 and chain 32. The construction described above, which supports the drum from one end only,

allows, as will be readily apparent, the mounting of non-rotatable elements of the apparatus in the drum through the open end thereof opposite plate 18.

Within drum 16 there is provided a suction hood 34 connected by means of a suction main 36 with an air-exhausting device (not shown). The suction hood, which is supported as by brackets 38, is positioned to draw air through a considerable area (hereinafter referred to as the "fiber-receiving area") of the foraminous surface of the drum adjacent to the fiberizing means 14. The hood 34 is sealed against the rotating parts to prevent excessive air leakage as by flexible wipers 39.

Fiberizing means 14 and the fiber-receiving area of the drum are preferably enclosed by housing 40. The housing aids in controlling the airstream set up by the suction box to confine it to the fiberizing zone. In addition the hood serves as means for collecting unfiberized particles.

The means for stripping the layer of fibers formed on drum 16 includes a pipe or nozzle member 42 of a length to extend substantially across the drum. The inner end of the pipe is closed off with a cap, plug, or the like 44. Member 42 is provided with a plurality of nozzles 46, directed toward the adjacent inner surface of the drum, which may comprise holes drilled through the pipe wall. Pipe 42 is carried by an arm 48, which in turn is connected to a hollow shaft 50. Shaft 50 and arm 48 are suitably composed of sections of pipe, the elements 50, 48 and 42 being connected, for example, by conventional elbows 52. In any event, the several elements form a continuous line for conveying a fluid to nozzles 46. Hollow shaft 50 is supported as by bracket 54 substantially axially of the drum for oscillating movement whereby oscillation of the shaft will swing pipe 42 through an arc substantially concentric with the surface of the drum. Hollow shaft 50 is connected through a fluid-tight connection or gland 53 of any suitable type, with stationary line 57 leading from the source of supply (not shown) of the fluid to be discharged by nozzles 46.

The means for oscillating shaft 50 is indicated diagrammatically at 56 and comprises, for example, an arm 58 fixedly secured to shaft 50 and a connecting link 60 carrying a follower 62 held in operating engagement as by spring 63 against cam 64. Cam 64 is driven from any suitable source of power (not shown) in timed relationship to the rotation of the drum. It will be understood that the invention is not limited to the particular means shown for oscillating or rocking nozzle member 42 through an arc of the required extent, and any other conventional or known apparatus for imparting similar mechanical movements may be employed.

A shield comprising a fixed section 51 and a movable section 53 lies closely adjacent and seals the inner surface of the drum. Section 51 extends from hood 34 to a point adjacent nozzle member 42, when the same is swung to its further position to the right, as shown by dotted lines in Fig. 1. It is supported in any suitable manner by connecting it to the hood at one end and securing it at spaced intervals to angle members 55 carried by frame members (not shown). Movable section 53 has one end secured to pipe or nozzle member 42, the other end riding on section 51. Section 53 is of sufficient length to overlap section 51 in any position of pipe 42.



Directly below drum 16 there is located a conveyor 66 extending in the direction of the axis of the drum. Conveyor 66 is of foraminous character and is suitably made of wire mesh screen. The conveyor is driven at a controlled speed, determined by the operation of the other elements of the apparatus, through a suitable drive, not shown in detail, but which may include supporting roll 68 carried by bearings in brackets 70.

Between the upper and lower reaches of conveyor 66 a suction box 72 is located to provide a flow of air through the upper reach of the conveyor beneath the drum. The suction box is connected by means of a suction main 74 with an air-exhausting device (not shown). The box may be sealed against the under surface of the conveyor by flexible wipers 76.

A housing 78 is located between the drum and conveyor 66, the housing substantially defining the area of the conveyor on which a fibrous layer is to be deposited from the drum. The housing may be sealed against the conveyor and drum, as by wipers 80. The forward wall 82 of the housing is shortened to accommodate a compression roll 84, the roll being spaced from the conveyor to define an exit port for the mat. Roll 84 may be a driven or an idler roll, as desired, and is suitably mounted for vertical adjustment to permit changes to be made in the thickness and extent of compaction of the mat or felt.

Means are preferably provided to apply a treating material such as a binder, waterproofing or the like to the thin layer formed on the drum. This mechanism comprises an elongated spray head 86 extending parallel to and substantially across the drum adjacent its outer surface, the head including a plurality of ports through which the binder or other treating material issues in the form of fine sprays impinging on the layer. The spray head is connected to a supply line 88 leading from a suitable supply (not shown). The binder or other treating material is applied to the opposite face of the thin layer preferably by including the material in finely divided form in the steam or other fluid supplied to nozzle member 42. The treating material may be drawn from the previously mentioned or other source of supply and introduced into the steam line at any suitable point. A binder spray means may also be supported to oscillate with nozzle member 42 to spray binder or other treating material against the felted layer after it leaves the surface of the drum. This means, which may be used either in conjunction with or in substitution for one or both of the other binder applying devices, comprises a spray pipe 90, extending parallel to and substantially across the drum and supported through suitable connections 92 from arm 48, whereby it oscillates with nozzle member 42. An arcuate slot 93 may be provided in the end wall of housing 82 to accommodate the swinging movement of pipe 90. The binder or other treating material may be drawn from a suitable source of supply, such as that previously mentioned, and conveyed to pipe 90 through a flexible hose or the like 94 and connections 92.

In the operation of the apparatus described above, and in carrying out the method of the instant invention, suction boxes 34 and 72 are connected through their respective ducts with any desired exhausting means to create a flow of air through the foraminous surface of the drum at the fiber-receiving area and through the surface of the conveyor respectively. Drum 16 is rotated at a relatively high speed, such as to have a sur-

face speed, say, of from 600 to 2000 feet per minute. A suitable fluid under pressure, preferably steam, is supplied to the line 57 in communication with hollow shaft 50, arm 48 and nozzle member 42, the fluid issuing in a plurality of jets from nozzles 46, spaced along the length of the nozzle member. Nozzle member 42 is oscillated through the desired arc by means of the cam arrangement shown. Cam 64 is contoured to move the nozzle member in an arc which will lay the layer in relatively even folds back and forth across the conveyor.

As the molten material delivered by trough 12 strikes the high speed rotors 14, it is thrown from the rotor by centrifugal force and drawn out into relatively fine threads or fibers. The fibers are collected on the surface of the drum to form a layer thereon by the inward movement of air through the surface of the drum created by suction box 34. The speed of rotation of the drum is controlled relatively to the rate of fiber formation to form a thin layer of the fibers on the drum, say one having a thickness of about ⅛ inch. It will be appreciated that, for purposes of illustration, this layer is shown of exaggerated thickness in the drawing.

The thin lap or layer adheres to the surface of the drum sufficiently to be carried around to the lower side of the drum. The shield formed of fixed section 51 and movable section 53 covers the inner surface of the drum from the hood to pipe 42 in all positions of the latter. The shield assists in maintaining the lap or layer on the drum by preventing outward movement of air through the surface of the drum which would tend to force off the fibrous layer before it reaches the blow-off point. During its travel on the drum a binder or the like may be applied to its outer face by spray head 86. When the layer reaches the under face of the drum it is contacted on its inner surface by the fluid jets issuing from nozzles 46. As the nozzle member 42 swings back and forth in its oscillatory path, the jets force or peel the layer of fibers from the surface of the drum and lay the layer back and forth in a plurality of laminations or folds on conveyor 66. The jets may also apply a binder or the like to the under surface of the layer, as previously described, and binder may also be applied by oscillating spray pipe 90. All or only selected ones of the binder applying devices may be employed, depending on the thickness of the layer formed on the drum, the character and amount of binder employed, and the like. Because of the coincidental forward movement of the conveyor, a continuous felt or blanket is formed thereon, the thickness of which is controlled by the speed of the conveyor relative to the rate of deposit of the lap or layer thereon. The laying of the successive layers or folds on the conveyor in intimate contiguous relationship to form a substantially integral blanket is aided by the current of air set up by suction box 72 acting through the conveyor.

The height of roll 84 relative to the conveyor is adjusted to somewhat compact the mass or felt built up on the conveyor. The felt is carried by conveyor 66 to any suitable location where it may be subjected to further operations to set the binder, and to divide the blanket into batts or pads of commercial size, and the like.

As a specific example of the operation of the instant invention, which however is not to be employed in a limiting sense, the drum is rotated at a speed relative to the rate of fiber formation to



form a layer about 2' wide and ⅛'' thick. The oscillations of nozzle member 42 are controlled by proper selection of cam 64 and the speed of the conveyor is regulated relatively to that of the drum to assemble a blanket on the conveyor about 5' wide and 3'' thick to meet the requirements for typical products.

Owing to the thin, loose characteristics of the layer built up on the drum, the application of a binder or other treating material in the manner previously described provides substantially complete dissemination of the binder throughout the layer, which, in turn, when the layers are laid on the conveyor, results in substantially uniform dissemination throughout the final felt. The treating material supplied to device 86, nozzle member 42 and/or spray pipe 90 may be of the conventional binder or waterproofing materials, such as asphalts, drying oils, resins, waxes, or other materials for similar purposes.

Having thus described our invention in rather full detail, it will be understood that these details need not be strictly adhered to, but that changes and modifications will suggest themselves to one skilled in the art, all falling within the scope of the invention as defined by the subjoined claims.

What we claim is:

1. In an apparatus having means for converting a molten material into fibers, a rotatable drum having an air-pervious fiber-collecting surface, means to cause deposit of the fibers in the form of a thin layer on said surface, means for rotating said drum, means beneath said drum to receive said layer, and oscillating means within said drum for discharging a fluid jet through said surface to remove said layer therefrom, said last-named means being operable to lay said layer in folds on said receiving means.

2. In an apparatus having means for converting a molten material into fibers, a rotatable drum having an air-pervious fiber-collecting surface, means to cause deposit of the fibers in the form of a thin layer on said surface, means for rotating said drum, a conveyor extending in a generally parallel direction to the axis of said drum to receive said layer, and oscillating means within said drum for discharging a fluid jet through said surface to remove said layer, said last-named means being operable to lay said layer in laterally extending folds on said conveyor.

3. In an apparatus having means for converting a molten material into fibers, a rotatable drum having an air-pervious fiber-collecting surface, means to cause deposit of the fibers in the form of a thin layer on said surface, means for rotating said drum, means beneath said drum to receive said layer, and means to remove said layer and lay it in folds on said receiving means, said last-named means including a nozzle member within said drum positioned to discharge fluid jets through said surface, and means for oscillating said nozzle member in an arcuate path.

4. In an apparatus having means for converting a molten material into fibers, a rotatable drum having an air-pervious fiber-collecting surface, means to cause deposit of the fibers in the form of a thin layer on said surface, means for rotating said drum, a conveyor beneath the drum and extending in a direction generally parallel to the axis of the drum, means to drive said conveyor at a controlled speed relative to the rotation of said drum, and means to remove said layer and lay it in folds on said conveyor, said

last named means comprising a nozzle member within said drum positioned to discharge fluid jets through said surface, and means for oscillating said nozzle member in an arcuate path.

5. In an apparatus having means for converting a molten material into fibers, a rotatable drum having an air-pervious fiber-collecting surface, means to cause deposit of the fibers in the form of a thin layer on said surface, means for rotating said drum, an air-pervious conveyor beneath said drum to receive said layer, suction means acting through said conveyor, and oscillating means within said drum for discharging a fluid jet through said surface to remove said layer, said last-named means being operable to lay said layer in folds on said receiving member.

6. In an apparatus having means for converting a molten material into fibers, a rotatable drum having an air-pervious fiber-collecting surface, means to cause deposit of the fibers on said surface in the form of a thin layer, means for rotating said drum, an air-pervious conveyor located beneath said drum to receive said layer, suction means acting through said conveyor, means to drive said conveyor at a controlled speed relative to the rotation of said drum, and means to remove said layer and lay it in folds on said conveyor, said last named means comprising a nozzle member within said drum positioned to discharge fluid jets through said surface, and means for oscillating said nozzle member in an arcuate path.

7. In a mineral wool apparatus having means for converting a molten material into fibers, a drum comprising an air-pervious surface having a fiber-receiving area adjacent to said means, a suction device acting through said surface, means for rotating said drum, a conveyor beneath said drum extending in a direction generally parallel to the axis of the drum, a nozzle means for blowing fluid jets through said surface above said conveyor, said nozzle means being mounted for oscillatory movement, and means for oscillating said nozzle means through an arcuate path substantially concentric with said drum.

8. In a mineral wool apparatus having means for converting a molten material into fibers, a fiber-collecting drum having an air-pervious surface, means to cause deposit of the fibers on said surface in the form of a thin layer, means for rotating said drum, a conveyor beneath said drum, means for applying a treating material of the type of a binder or waterproofing media to the outer face of said layer on said drum, a nozzle member within said drum positioned to discharge fluid jets through said surface above said conveyor to force the layer from said surface, and means for delivering a treating material of a type of a binder or waterproofing media to said nozzle member whereby treating material is applied to the inner face of said layer.

9. In a mineral wool apparatus having means for converting a molting material into fibers, a fiber-collecting drum having an air-pervious surface, means to cause deposit of the fibers on said surface in the form of a thin layer, means for rotating said drum, a conveyor beneath said drum, means for applying a treating material of the type of a binder or waterproofing media to the outer face of said layer on said drum, a nozzle member within said drum positioned to discharge fluid jets through said surface above said conveyor to force the layer from said surface, means for oscillating said nozzle member in an arcuate path, and means for delivering a treating material of the type of a binder or waterproofing media to said nozzle member whereby said treating material is applied to the inner face of said layer.



10. In a mineral wool apparatus having means for converting a molten material into fibers, a rotatable drum having an air-pervious surface, means to cause deposit of said fibers to form a thin layer on said surface, means for rotating said drum, receiving means below said drum to receive the layer therefrom, and a nozzle member for removing said layer from said drum and depositing it in folds on said receiving means, said nozzle member comprising a pipe located within said drum and extending axially thereof and having a plurality of nozzles positioned to direct fluid jets through said surface above said receiving means, an oscillatory arm carrying said pipe, means for supplying a fluid under pressure to said pipe through said arm, and means for oscillating said arm to move said pipe through an arc to lay said fiber in folds back and forth across said receiving means.

11. In an apparatus having means for converting a molten material into fibers, a movable fiber-collecting means, means to cause deposit of the fibers on said collecting means in the form of a thin layer, means for moving said collecting means, a traveling receiving member adjacent said collecting means, and jet means oscillating in a path adjacent the surface of the collecting means for removing said layer from the collecting means and for directly laying it in laterally extending, overlapping folds on said receiving member.

12. In a mineral wool apparatus having means for converting molten material into fibers, a fiber-collecting means, means to cause deposit of the fibers on said collecting means in the form of a thin layer, jet means oscillating in a path adjacent the surface of the fiber-collecting means for removing the layer from the collecting means and for directly laying it in folds on a receiving member, and means for applying a treating material of the type of a binder or waterproofing media to both faces of the material prior to its deposit on said receiving member.

HAROLD T. COSS.
EDWARD R. POWELL.


## REFERENCES CITED

The following references are of record in the file of this patent:

UNITED STATES PATENTS

| Number | Name | Date |
|---|---|---|
| 1,656,828 | Powell | Jan. 5, 1927 |
| 1,887,673 | Borcholt et al. | Nov. 15, 1932 |
| 1,913,242 | McClure | June 6, 1933 |
| 2,110,280 | Vieweg | Mar. 8, 1938 |
| 2,117,371 | Slayter | May 17, 1938 |
| 2,127,287 | Carson | Aug. 16, 1938 |
| 2,192,944 | Thomas | Mar. 12, 1940 |
| 2,202,030 | Siegfried | May 28, 1940 |
| 2,230,271 | Simpson | Feb. 4, 1941 |
| 2,287,815 | Modigliani | June 30, 1942 |
| 2,333,218 | Von Pazsiczky | Nov. 2, 1943 |