Nov. 20, 1956 J. W. BROWN ET AL 2,771,217

MEASURING AND DISPENSING DEVICE

Filed July 20, 1953

Fig. 1.

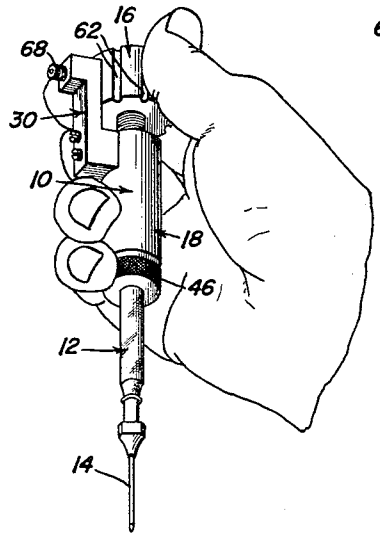

Fig. 2.

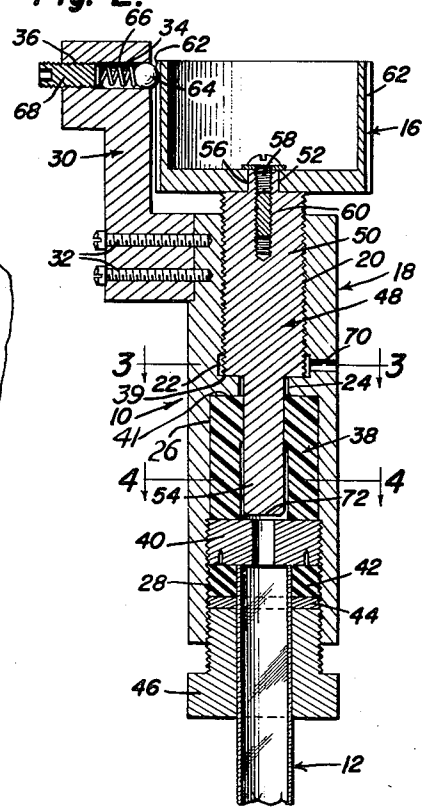

Fig. 5.

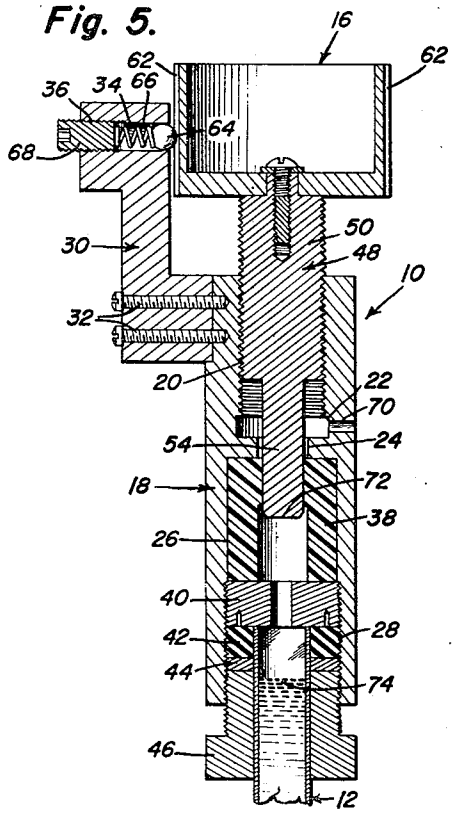

Fig. 3.

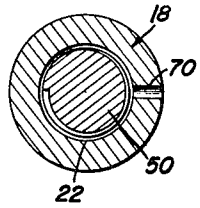

Fig. 4.

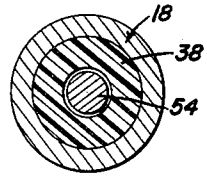

Inventors

James W. Brown

Robert L. Weintraub

By George Rinehart

Attorney

United States Patent Office 2,771,217 Patented Nov. 20, 1956

2,771,217

MEASURING AND DISPENSING DEVICE

James W. Brown and Robert L. Weintraub, Frederick, Md., assignors to the United States of America as represented by the Secretary of the Army

Application July 20, 1953, Serial No. 369,257

8 Claims. (Cl. 222—43)

(Granted under Title 35, U. S. Code (1952), sec. 266)

The invention described herein may be manufactured and used by or for the Government of the United States of America for governmental purposes without the payment to us of any royalty thereon.

The invention relates generally to pipettes, and specifically to those which are used in laboratory biological studies wherein minute volumes of radioactive or toxic liquids are involved.

Laboratory infections are common among biologists working with pathogenic microorganisms. Often such infections are traceable to violations of safe laboratory technique, however, frequently such infections are caused by accidents that occur while aspirating infectious liquids through a pipette. Various solutions to this problem have been attempted, among which are included the well known rubber bulb-type pipette, pipettes including an extension of rubber tubing for contact with the mouth, and those which include a cotton filter in the tubing. Other modified pipettes have also been tried, but none of the proposals have been fully accepted either because of failure to insure safety or inability to accurately dispense minute quantities of liquid.

It is an object of this invention to provide a pipette which can accurately and safely handle minute volumes (0.002 to 0.01 ml.) of liquids containing radioactive elements or toxic agents.

It is another object of the invention to provide a portable, safety pipette which may be operated by only one hand.

It is still another object of the invention to provide a portable, safety pipette which is capable of delivering successive volumes of liquid of small magnitude from a single filling.

It is a further object of the invention to provide a portable safety pipette which is capable of delivering small amounts of liquid, and wherein visual measuring is eliminated.

It is a still further object of the invention to provide a pipette wherein the liquid being handled is not brought into contact with the pipette in normal use, and wherein the delivery tips may be easily replaced.

The above and other objects of the invention will become apparent from the following description taken in conjunction with the attached drawings, wherein:

Fig. 1 is a perspective view of the improved pipette being held in the hand of an operator.

Fig. 2 is a sectional view taken in a vertical plane passing through the pipette.

Fig. 3 is a sectional view taken on lines 3—3 of Fig. 2.

Fig. 4 is a sectional view taken on line 4—4 of Fig. 2.

Fig. 5 is a view similar to Fig. 2 showing some of the parts in a different position.

Referring to Fig. 1, the pipette **10** is shown positioned in the right hand of an operator during use. The pipette has a detachable delivery tip **12** connected thereto, which may include a conventional hypodermic needle **14**. The thumb and index finger of the operator grip the grooved

control knob **16**, while the remaining fingers encircle the body portion of pipette **10**.

The structure of pipette **10** can be more clearly seen in Figs. 2 to 5. Fig. 2 shows the parts in position prior to loading the pipette with liquid. Fig. 5 shows the parts in position after the pipette has been loaded with liquid, and prior to expelling the liquid in measured quantities.

In Fig. 2 it will be observed that the body portion of the pipette comprises cylinder **18**, which has an irregular passageway formed therethrough by a series of connecting bores. Reading from top to bottom in Fig. 2, the series of bores comprises threaded bore **20**, enlarged bore **22**, reduced bore **24**, enlarged bore **26** and threaded bore **28**. Z-shaped block **30** is secured to the top of cylinder **18** at one side thereof by conventional securing means **32**. A horizontal bore **34**, a portion of which is threaded at **36**, is formed in the upper leg of block **30**.

Referring to the lower portion of cylinder **18**, it will be observed that a bushing **38** is positioned within bore **26**, and that an apertured plug **40** is threaded into the threaded bore **28**, which locks said bushing in position. Bushing **38** may be made of metal or a plastic, teflon being well suited. At reduced portion **24** the bores define an inwardly extending annular shoulder having flat upper and lower faces **39** and **41**, respectively. The bushing **38** is held against face **41** by plug **40**. Below plug **40** are positioned in turn: soft rubber ring **42**, metal washer **44** and knurled closure plug **46**. Delivery tip **12** is shown mounted in the lower portion of cylinder **18**. The delivery tip **12**, which may be of the conventional glass variety, is detachably secured in the cylinder **18** by the radially-inwardly directed force of the soft rubber ring **42**, which is created when said ring is compressed by the closure plug **46**. To secure or remove the delivery tip **12** in the cylinder **18**, it is only necessary to screw or unscrew closure plug **46**, thereby creating or releasing pressure on the upper portion of the delivery tube.

Ejection piston **48** is mounted in the upper portion of the cylinder **18**, and comprises a central threaded portion **50**, a non-circular stub portion **52** and a piston portion **54**. Control knob **16**, having an opening **56** of the same shape as stub **52**, fits onto stub **52** and is secured to the ejection piston **48** in a driving fit by conventional securing means **58**, which are received in threaded opening **60** in the ejection piston. Control knob **16** has a plurality of parallel axial grooves **62** formed in its outer surface (see Fig. 1). Grooves **62** are adapted to cooperate with ball **64**, which is resiliently pressed out of bore **34** in the block **30** into one of said grooves by compression spring **66**. Pressure on the ball **64** can be varied by adjusting threaded plug **68**, which is fitted in the threaded portion **36** of the bore **34**. With this arrangement, the control knob **16** and ejection piston **48** can be rotated through a predetermined portion of a turn by rotating the knob **16** so that the ball **62** is forced out of the groove it is seated in, rolls over the knob and enters the next groove. This operation will be more fully explained subsequently.

The threaded portion **50** of the ejection piston **48** is adjustably received in the threaded bore **20** of the cylinder **18**, and the piston portion **54** is slidably mounted in the bushing **38** in fluid tight relation therewith, so that the bushing acts as a sealing means. Radial vent hole **70** is formed in one side of cylinder **18**, and places the interior of cylinder **18**, in the vicinity of bore **22**, into communication with the atmosphere.

The above described structure functions in the following manner: rotation of the control knob **16** causes the ejection piston **48** to advance or retract in the cylinder **18** and displace a volume of air. The volume of air displaced is dependant upon the area of the lower face **72**

of the piston portion 54 of the ejection piston, and the linear distance said face is moved. The area of the face 72 is determined when the dimensions are fixed. The linear movement depends upon the pitch of the threads in threaded portion 50, and the angular displacement of the control knob. The pitch of the threaded portion 50 is determined at the outset, therefore the only variable is the angular displacement of the control knob 16.

The spring pressed ball and axial groove arrangement discussed above makes it possible for the control knob 16 to be moved through any convenient, predetermined angle, simply and automatically. This is accomplished by forming any convenient number of axial grooves in the outer surface of control knob 16. For example, if eight equally spaced grooves are formed in the outer surface of control knob 16, rotation of the knob the distance between two grooves causes the knob to rotate through one eighth of a turn. Since the linear movement of the piston face 72 equals the pitch of the threads multiplied by the number of times the ejection piston is turned, the volume of air displaced equals this product multiplied by the area of piston face 72. Knowing the area of the face 72 of piston portion 54, and the pitch of the threads on threaded portion 50, and the number of grooves in the control knob 14, it will be apparent that the volume of air displaced may be calculated at will by fixing the critical dimensions.

The above mentioned displacement of air caused by moving ejection piston 48 results in a like displacement of solution either into or out of the delivery tip 12 depending up the direction of movement of the piston. To illustrate this, with the parts positioned as shown in Fig. 2, the lower portion of delivery tip 12 is immersed in the solution and the control knob 16 moved in a direction to retract ejection piston 48 out of cylinder 18 (move the piston upwardly relative to the cylinder 18). This causes a predetermined amount of air to be displaced which creates a suction and causes an equal volume of liquid to be drawn into the delivery tip. Continued movement of the ejection piston in this direction results in the ejection piston 48 ultimately assuming the retracted position shown in Fig. 5. In this position the pipette is loaded, however, it should be realized that, unless otherwise intentionally desired, none of the liquid contacts any portion of the pipette structure, the uppermost level to which it reaches being indicated by reference numeral 74 in Fig. 5.

Movement of the control knob 16 in the opposite direction causes the ejection piston 48 to move downwardly relative to the cylinder 18 (as shown in Fig. 5), thereby displacing a predetermined volume of air and consequently expelling an equal volume of liquid out of the delivery tip. It should be noted that while the ejection piston 48 is advancing downwardly, air in the vicinity of bore 22 is vented out of radial bore 70 to preclude the possibility of building up air pressure in that area.

From the above description of the structure and operation of our improved pipette, it will be observed that we have provided a portable pipette which may be conveniently and efficiently operated by one hand; wherein the necessity for the operator to touch the device with his lips is eliminated, along with visual measurement of the liquid being dispensed; wherein none of the liquid contacts any portion of the pipette structure, and which therefore is extremely safe to use. With our improved pipette, successive volumes of minute quantities of liquid can be dispensed from a single filling; the range of volume accurately dispensed being 0.002 to 0.01 ml. Our pipette permits a wide range of choice of volume to be dispensed, for it is simply a matter of changing the number of grooves in the control knob 16 (by substituting a different control knob), or varying the pitch of the threads on threaded portion 50 or the area of the face 72 of the piston portion 54. From the above it will be observed that our improved pipette fulfills each and every object of this invention.

Having described one embodiment of our invention in great detail, it is not thereby intended that we be limited to the specific structure illustrated, for there are many changes that may be made by one skilled in the art which fall within the spirit of our invention and the scope of the appended claims.

We claim:

1. A measuring and dispensing device comprising a cylinder having an axial passageway extending throughout its length, means for removably securing a delivery tip in a first end of said passageway, an ejection piston in threaded engagement with the second end of said passageway, said ejection piston having a smoothly cylindrical piston portion within said passageway, a sealing means in said passageway engaging said piston portion in fluid tight relationsihp, a vent communicating with said passageway beyond said sealing means toward said second end, a control knob secured to said ejection piston, detent means carried by said knob and said cylinder and so constructed and arranged as to detain said knob at a plurality of evenly divided points during rotation thereof.

2. A device as defined in claim 1 wherein said detent means comprises a plurality of axially extending slots evenly distributed about the peripheral surface of said knob and a spring pressed detent carried by said cylinder.

3. A device as defined in claim 1 wherein said sealing means comprises a removable bushing having a cylindrical surface in fluid-tight engagement with said piston portion.

4. A device as defined in claim 3 wherein said bushing is of plastic and said piston portion is metal.

5. A measuring and dispensing device comprising a cylinder having an axial passageway, means for removably securing a delivery tip in the lower end of said passageway, an ejecting piston mounted in said passageway, an internally threaded portion in the upper end of said passageway, an external threaded portion on said ejecting piston cooperating with said internally threaded portion, an inwardly extending annular shoulder in said passageway below said threaded portions, a vent leading from said passageway above said shoulder, a removable bushing in said passageway below and abutting said shoulder, a collar threaded in said passageway below and abutting said bushing, a smoothly cylindrical piston portion on said ejecting piston extending past said shoulder and into said bushing, said bushing having a bore the upper portion of which is in fluid-tight engagement with said piston; said means for removably securing a delivery tip in said lower end comprising an elastic compressible ring abutting the lower side of said collar, and a plug for compressing said elastic ring against said collar, said plug having a central aperture to receive the delivery tip; a control knob on the upper end of said piston, and cooperating detent means on said knob and cylinder constructed and arranged to detain said knob at a plurality of evenly divided points during rotation thereof.

6. A device as defined in claim 5 wherein said bushing is formed of plastic and said piston portion is metal.

7. A device as defined in claim 5 wherein said bushing is formed of teflon and said piston portion of metal.

8. A device as claimed in claim 5 wherein said detent means comprises a plurality of axially extending slots evenly distributed about the peripheral surface of said knob and a spring-pressed detent carried by said cylinder.

References Cited in the file of this patent

UNITED STATES PATENTS

2,172,575	Caulfield	Sept. 12, 1939
2,254,449	Rasmussen	Sept. 2, 1941
2,540,360	Ulvild	Feb. 6, 1951
2,626,087	Howard et al.	Jan. 20, 1953