(12) INTERNATIONAL APPLICATION PUBLISHED UNDER THE PATENT COOPERATION TREATY (PCT)

(19) World Intellectual Property Organization
International Bureau

(43) International Publication Date
29 January 2009 (29.01.2009)

PCT

(10) International Publication Number
WO 2009/014366 A2

(51) International Patent Classification:
H01Q 1/24 (2006.01)

(21) International Application Number:
PCT/KR2008/004282

(22) International Filing Date: 22 July 2008 (22.07.2008)

(25) Filing Language: English

(26) Publication Language: English

(30) Priority Data:
10-2007-0073526 23 July 2007 (23.07.2007) KR

(71) Applicant *(for all designated States except US)*: **LG INNOTEK CO., LTD** [KR/KR]; 33Fl., LG Twin Tower West, 20 Yeouido-dong, Yeongdeungpo-gu, Seoul 150-721 (KR).

(72) Inventor; and
(75) Inventor/Applicant *(for US only)*: **CHO, Young Bin** [KR/KR]; 204-802, Dohyeon Hyundai Apt., Singal-dong, Giheung-gu, Yongin-si, Gyeonggi-do 446-952 (KR).

(74) Agent: **HAW, Yong Noke**; 6th Fl., Hyun Juk Bldg., 832-41, Yeoksam-dong, Gangnam-gu, Seoul 135-080 (KR).

(81) Designated States *(unless otherwise indicated, for every kind of national protection available)*: AE, AG, AL, AM, AO, AT, AU, AZ, BA, BB, BG, BH, BR, BW, BY, BZ, CA, CH, CN, CO, CR, CU, CZ, DE, DK, DM, DO, DZ, EC, EE, EG, ES, FI, GB, GD, GE, GH, GM, GT, HN, HR, HU, ID, IL, IN, IS, JP, KE, KG, KM, KN, KP, KZ, LA, LC, LK, LR, LS, LT, LU, LY, MA, MD, ME, MG, MK, MN, MW, MX, MY, MZ, NA, NG, NI, NO, NZ, OM, PG, PH, PL, PT, RO, RS, RU, SC, SD, SE, SG, SK, SL, SM, ST, SV, SY, TJ, TM, TN, TR, TT, TZ, UA, UG, US, UZ, VC, VN, ZA, ZM, ZW.

(84) Designated States *(unless otherwise indicated, for every kind of regional protection available)*: ARIPO (BW, GH, GM, KE, LS, MW, MZ, NA, SD, SL, SZ, TZ, UG, ZM, ZW), Eurasian (AM, AZ, BY, KG, KZ, MD, RU, TJ, TM),

[Continued on next page]

(54) Title: DISPLAY APPARATUS AND MOBILE TERMINAL HAVING THE SAME

[Fig. 1]

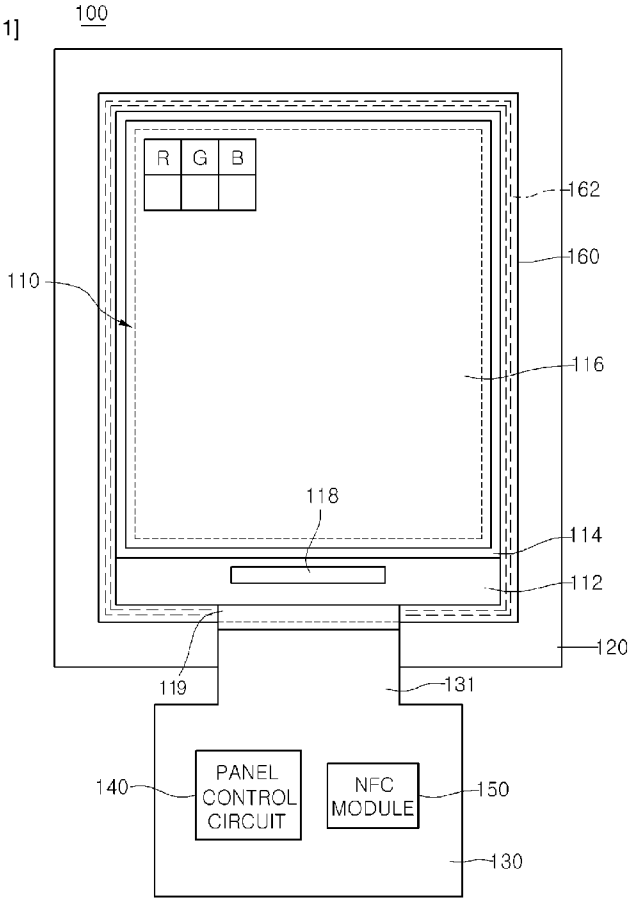

(57) Abstract: Provided are a display apparatus comprising a loop antenna, and a mobile terminal having the same. The display apparatus comprises a display panel, a loop antenna portion for wireless communication on an outer side of the display panel, and a wireless communication module electrically connected with the loop antenna portion.

WO 2009/014366 A2

European (AT, BE, BG, CH, CY, CZ, DE, DK, EE, ES, FI, FR, GB, GR, HR, HU, IE, IS, IT, LT, LU, LV, MC, MT, NL, NO, PL, PT, RO, SE, SI, SK, TR), OAPI (BF, BJ, CF, CG, CI, CM, GA, GN, GQ, GW, ML, MR, NE, SN, TD, TG).

Published:

— *without international search report and to be republished upon receipt of that report*

Description

DISPLAY APPARATUS AND MOBILE TERMINAL HAVING THE SAME

Technical Field

[1] Embodiments relate to a display apparatus comprising a loop antenna and a mobile terminal having the same.

Background Art

[2] Generally, a mobile terminal transmits and receives radio frequency (RF) signals to and from a base station to form a mobile communication network, thereby receiving various services such as voice communication and data transmission/reception.

Disclosure of Invention

Technical Problem

[3] Embodiments provide a display apparauts mounting a loop antenna for wireless communication therein, and a mobile terminal having the same.

[4] Embodiments provide a display apparatus where a loop-type antenna is disposed along the outer periphery of a display panel, and a mobile terminal having the same.

[5] Embodiments provide a display apparatus where a loop-type antenna is disposed along the outer periphery of at least one display panel of a plurality of display panels, and a mobile terminal having the same.

Technical Solution

[6] An embodiment provides a display apparatus comprising: a display panel; a loop antenna portion for wireless communication on an outer side of the display panel; a wireless communication module electrically connected with the loop antenna portion.

[7] An embodiment provides a mobile terminal comprising: a body; a display device comprising a display panel on the body; a loop antenna portion for wireless communication on an outer side of the display panel; and a wireless communication module electrically connected with the loop antenna portion.

[8] The details of one or more embodiments are set forth in the accompanying drawings and the description below. Other features will be apparent from the description and drawings, and from the claims.

Advantageous Effects

[9] Embodiments dispose a loop antenna on the outer periphery of a display panel, so that a mounting space for the loop antenna does not need to be separately secured.

[10] Embodiments dispose a loop antenna on the outer periphery of a display panel to allow additional services by near filed communication (NFC) to be conveniently used.

[11] Embodiments attach a ferrite sheet under a loop antenna on the outer periphery of a display panel to reduce a noise having an influence on the loop antenna.

[12] Also, a noise mixed into a display panel by a ferrite sheet can be reduced.

Brief Description of the Drawings

[13] Fig. 1 is a plan view of a display apparatus according to a first embodiment.

[14] Fig. 2 is a side cross-sectional view illustrating the display apparatus of Fig. 1 is coupled.

[15] Fig. 3 is a plan view of a mobile terminal having the display apparatus according to the first embodiment.

[16] Fig. 4 is a block diagram of the mobile terminal of Fig. 3.

[17] Fig. 5 is a side cross-sectional view illustrating a display apparatus according to a second embodiment.

[18] Fig. 6 is a front view of a mobile terminal having the display apparatus according to the second embodiment.

[19] Fig. 7 is a perspective view illustrating the mobile terminal of Fig. 6 in use.

Best Mode for Carrying Out the Invention

[20] Hereinafter, embodiments are described below with reference to the accompanying drawings. In the description of the embodiments, expressions of on and under each element are made with reference to the drawings.

[21] Fig. 1 is a plan view of a display apparatus according to a first embodiment.

[22] Referring to Fig. 1, a display apparatus 100 comprises a display panel 110, a mold frame 120, a main board 130, a sub board 131, and a loop antenna portion 160.

[23] The display panel 110 can be realized in a liquid crystal display (LCD) panel, for example. The display panel 110 comprises an upper glass substrate 112, a lower glass substrate 114, and an LC layer interposed between the upper glass substrate 112 and the lower glass substrate 114. Here, For the LC, twisted nematic (TN) mode, an electrical controlled birefringence (ECB) mode, an optically compensated bend (OCB) mode, an in-plane switching (IPS) mode, or a vertical alignment (VA) mode can be applied. Also, the LC can be driven in a normally block mode or a normally white mode. In an embodiment, the array characteristic of the substrates or an LC layer can be changed with the scope of the present disclosure, and is not limited thereto.

[24] Also, the display panel 110 can be at least one of an LCD panel, an organic light emitting diode (OLED), a field emission display (FED), and a digital paper display device. The kind of the display panel 110 is not limited thereto. Also, the display panel 110 can comprise an input unit using a touch pad.

[25] A polarizer 116 can be attached on at least one side of the display panel 110.

[26] A driving chip 118 is mounted on one end of the lower glass substrate 112 of the

display panel 110, and electrically connected with the sub board 131 through a connector 119 of the lower glass substrate 112, and controls the driving of the display panel 110. One end of the sub board 131 is electrically connected with the connector 119, and the other end of the sub board 131 is electrically connected with the main board 130. The sub board 131 can be formed using a flexible printed circuit board (FPCB), and the main board 130 can be formed in a hard PCB.

[27] The main board 130 can be disposed in the rear of the mold frame 120, and the sub board 131 is disposed on the lateral side of the mold frame 120.

[28] The main board 130 comprises a panel control circuit 140 and a short distance wireless communication module 150. Here, the panel control circuit 140 can be realized as an LCD control circuit controlling the display panel 110. The short distance wireless communication module 150 can be realized using a near field communication (NFC) module of 13.56 MHz, for example. Here, the NFC is a short distance wireless communication supporting data exchange between a mobile terminal, a home appliance, and a personal computer (PC) within 10 cm. The NFC uses a band of 13.56 MHz for its communication frequency. Since this NFC communication is various depending on an application field, it is not limited thereto.

[29] The display panel 110 is received inside the mold frame 120. The mold frame 120 can be formed in a frame shape whose inside is open using a resin material by injection molding, for example.

[30] The loop antenna portion 160 is disposed on the outer periphery of the display panel 110, and attached along the upper outer side of the display panel 110. Also, the loop antenna portion 160 can be attached along the lower outer side of the display panel 110.

[31] The loop antenna portion 160 has a structure obtained by forming antenna patterns 162 on an insulating film or a flexible board. The antenna patterns 162 are formed in a loop shape along the outer periphery of the display panel 110. The antenna patterns 162 can be coated with an insulating material.

[32] Also, the length of the antenna patterns 162 can be controlled by inductance and capacitance while the antenna is designed. The number of windings of the antenna patterns 162 can be at least one but is not limited thereto.

[33] Fig. 2 is a side cross-sectional view illustrating the coupling structure of the display apparatus of Fig. 1.

[34] Referring to Fig. 2, the display panel 110, an optical sheet portion 122, and a light guide plate 121 are stacked inside the mold frame 120.

[35] Polarizers 116 are attached on both sides of the display panel 110, respectively. The optical sheet portion 122 is disposed under the display panel 110. The optical sheet portion 122 comprises a diffusion sheet (not shown) and a prism sheet (not shown).

The diffusion sheet diffuses light incident thereto, and the prism sheet condenses the diffused light onto a display panel region. The prism sheet can selectively comprise a horizontal prism sheet, a vertical prism sheet, and an illumination intensity enhancing film.

[36] Here, the lower outer side of the display panel 110 can be attached and fixed on an adhesive member 123. The adhesive member 123 is a double-sided tape and is attached on the lower outer side of the display panel 110, and the regions of the optical sheet portion 122 and the mold frame 120. Here, the fixing structure of the display panel 110 can change, and is not limited to the adhesive member 123.

[37] The light guide plate 121 is disposed under the optical sheet portion 122. The light guide plate 121 changes incident light into surface light to illuminate the same onto the display panel 110. A light source unit (not shown) can be disposed on the lateral side of the light guide plate 121. The light source unit (not shown) is a side light emitting unit, and can be realized using a light emitting diode (LED) and/or a fluorescent lamp (e.g.: cold cathode fluorescent lamp (CCFL)) but is not limited thereto.

[38] A reflective sheet 125 can be disposed under the light guide plate 121. The reflective sheet 125 reflects light leaking downward from the light guide plate 121.

[39] A chassis 128 is coupled to the lower portion and the outer side of the mold frame 120. A groove 129 is formed in the lateral side of the chassis 128 and couples to a protrusion 127 formed on the later side of the mold frame 120. The chassis 128 may not be provided and the structure is not limited to the above coupling structure. Also, the chassis 128 can be grounded to a ground terminal.

[40] The main board 130 is attached under the mold frame 120. The panel control circuit 140 mounted under the main board 130 is electrically connected with the display panel 110, and the NFC module 150 is electrically connected with the loop antenna portion 160.

[41] The loop antenna portion 160 is attached on the outer upper surface of the upper glass substrate 112 of the display panel 110. That is, the polarizer 116 is attached in the inner region of the upper glass substrate 112, and the loop antenna portion 160 can be attached on the outer region.

[42] Also, a ferrite sheet 164 can be disposed under the loop antenna portion 160. The ferrite sheet 164 can be integrally formed with the loop antenna portion 160, and attached on the outer periphery of the upper glass substrate 112.

[43] The ferrite sheet 164 is designed for preventing a noise from being introduced to the loop antenna portion 160 from a surrounding metal, and can reduce a high frequency noise having an influence on the loop antenna portion 160. Also, the ferrite sheet 164 is disposed around the display panel 110 to reduce a noise introduced to the display panel 110.

[44] The loop antenna portion 160 is disposed in the front direction of the display apparatus 100 to allow NFC with an external device to be conveniently performed.

[45] Fig. 3 is a plan view of a mobile terminal having the display apparatus according to the first embodiment.

[46] Referring to Fig. 3, the mobile terminal 200 is a bar type or a slide type structure. The display apparatus 100 and a keypad unit 210 can be disposed on the front side of a body 201 of the mobile terminal 200. The display apparatus 100 can be disposed on the front side of the body 201 without the keypad unit 210.

[47] The loop antenna portion 160 is formed on the outer periphery of the display panel 110 of the display apparatus 100 to allow a user to perform NFC with an object device through the loop antenna 160.

[48] Also, the loop antenna portion 160 can be formed in a loop shape between the display panel 110 and the body 201.

[49] Fig. 4 is a block diagram of the mobile terminal of Fig. 3.

[50] Referring to Fig. 4, the panel control circuit 140 of the main board 130 interfaces with the display panel 110 and the host 135.

[51] The NFC module 150 communicates with the host 135 and performs NFC through the loop antenna portion 160.

[52] The host 135 transmits/receives data to and from the panel control circuit 140 and the NFC module 150.

[53] The NFC module 150 comprises a micro controller unit (MCU) 151, an input/output unit 152, a universal asynchronous receiver/transmitter (UART) 153, a power unit 154, a memory unit 155, an oscillator 156, and an RF matching unit 157. The controller 151 controls respective elements in order to perform NFC. The input/output unit 152 is a general purpose input/output (GPIO) pin, and controls a specific device or receives data.

[54] The UART 153 performs communication with a serial communication device, and the power unit 154 supplies power to respective elements of the module. The memory unit 155 stores various information required for communication and transmission/ reception data. Also, the oscillator 156 generates a frequency required for transmission/reception, and for example, generates an oscillation frequency of 13.56 MHz in order to perform NFC.

[55] The RF matching unit 157 is a matching terminal compensating for an impedance difference between an input terminal and an output terminal, and is connected at both ends of the antenna patterns 162 of the loop antenna portion 160.

[56] The NFC module 150 performs NFC with an external device through the loop antenna portion 160 formed on the outer periphery of the display panel 110. Also, the host 135 can control a communication operation of the NFC module 150, and can

inform a user of data received from the NFC module 150, through the display panel 110.

[57] Fig. 5 is a side cross-sectional view illustrating a display apparatus according to a second embodiment. In describing the second embodiment, explanations of the same parts as those of the first embodiment are omitted.

[58] Referring to Fig. 5, a display apparatus 100A is a dual display device, and comprises a main display panel 110A and a sub display panel 110B. The main display panel 110A is disposed on a front side of a mold frame 120, and the sub display panel 110B is disposed on a back side of the mold frame 120.

[59] The display apparatus 100A displays information in both directions using the main display panel 110A and the sub display panel 110B.

[60] The main display panel 110A and the sub display panel 110B can use at least one of an LCD panel, an organic light emitting diode (OLED), a field emission display (FED), and a digital paper display device, for example.

[61] The sub display panel 110B can display information using light leaking to the rear of a light guide plate 121. A reflective sheet 125 is disposed on the rear outer side of the light guide plate 121 to reflect light to the rear outer side of the light guide plate 121.

[62] The sizes of the main display panel 110A and the sub display panel 110B can be the same or different from each other, but are not limited thereto.

[63] A loop antenna portion 160A is disposed on the outer side of the sub display panel 110B. The loop antenna portion 160A can be disposed on the main board 130 or disposed along the outer upper side of the sub display panel 110B.

[64] A ferrite sheet 164 is attached between the loop antenna portion 160A and the main board 130. The loop antenna portion 160A and the ferrite sheet 164 are formed in a loop shape along the outer periphery of the sub display panel 110B.

[65] Here, the loop antenna portion 160A can be disposed on the outer side of the sub display panel 110B and/or the main display panel 110A.

[66] Fig. 6 is a front view of a mobile terminal having the display apparatus according to the second embodiment, and Fig. 7 is a perspective view illustrating the mobile terminal of Fig. 6 in use.

[67] Referring to Figs. 6 and 7, the mobile terminal 300 is a folder type, and comprises an upper main body 301 and a lower main body 302. The upper main body 301 rotates by a predetermined angle with respect to the lower main body 302 around a hinge portion 303.

[68] A dual display apparatus 100A is mounted inside the upper main body 301. The loop antenna portion 160A is disposed on the periphery of the sub display panel 110B of the upper main body 301. The mobile terminal can perform NFC through the loop antenna portion 160A.

[69] Even with the upper main body 301 folded or unfolded, the mobile terminal 300 can perform the NFC using the loop antenna portion 160A. That is, the NFC can be performed while the mobile terminal is in a standby state and/or an active state. Here, during the standby state, the upper main body 301 is folded to the lower main body 302. During the active state, the upper main body 301 is unfolded from the lower main body 302.

[70] In the first and second embodiments, the loop antenna is disposed on the outer periphery of the display panel, so that a mounting space for the loop antenna does not need to be secured inside the mobile terminal. Also, the loop antenna for NFC is disposed on the outer periphery of the display panel, so that additional service by NFC can be conveniently used.

[71] Also, the ferrite sheet is attached on one side of the loop antenna, so that a noise having an influence on the loop antenna can be reduced. Also, the ferrite sheet can reduce a noise mixed into the display panel.

[72] Although embodiments have been described with reference to a number of illustrative embodiments thereof, it should be understood that numerous other modifications and embodiments can be devised by those skilled in the art that will fall within the spirit and scope of the principles of this disclosure. For example, various variations and modifications are possible in the component parts specifically described in the embodiments of the present disclosure, which should be construed as falling within the scope of the present disclosure defined by the appended claims.

Industrial Applicability

[73] Embodiments dispose a loop antenna on the outer periphery of a display panel, so that a mounting space for the loop antenna does not need to be separately secured.

[74] Embodiments dispose a loop antenna on the outer periphery of a display panel to allow additional services by near filed communication (NFC) to be conveniently used.

[75] Embodiments attach a ferrite sheet under a loop antenna on the outer periphery of a display panel to reduce a noise having an influence on the loop antenna.

[76] Also, a noise mixed into a display panel by a ferrite sheet can be reduced.

Claims

[1] A display apparatus comprising:
a display panel;
a loop antenna portion for wireless communication on an outer side of the display panel; and
a wireless communication module electrically connected with the loop antenna portion.

[2] The display apparatus according to claim 1, wherein the loop antenna portion is formed along an outer upper side or lower side of the display panel.

[3] The display apparatus according to claim 1, comprising an insulating film or a flexible board where the loop antenna portion comprises loop shaped antenna patterns along an outer side of the display panel.

[4] The display apparatus according to claim 1, comprising a ferrite sheet under the loop antenna portion.

[5] The display apparatus according to claim 1, comprising:
a main board comprising the wireless communication module and a panel control circuit; and
a sub board electrically connecting the display panel and the loop antenna portion to the main board.

[6] The display apparatus according to claim 5, wherein the sub board comprises a flexible printed circuit board, one end of which is electrically connected with a connector of the display panel and the loop antenna portion, and the other end of which is electrically connected with the main board.

[7] The display apparatus according to claim 1, comprising:
a mold frame receiving the display panel;
an optical sheet portion under the display panel;
a light guide plate under the optical sheet portion; and
a light source unit supplying light to the light guide plate.

[8] The display apparatus according to claim 7, wherein the display panel comprises:
a main display panel on upper side of the mold frame; and
a sub display panel on lower side of the mold frame, and
the loop antenna portion is disposed on the outer side of at least one of the main display panel and the sub display panel.

[9] The display apparatus according to claim 1, wherein the loop antenna portion comprises an antenna for near field communication.

[10] The display apparatus according to claim 1, wherein the display panel comprises at least one of a touch pad, a liquid crystal panel, an organic light emitting diode,

a field emission display, and a digital paper display module.

[11] A mobile terminal comprising:
a body;
a display device comprising a display panel on the body;
a loop antenna portion for wireless communication on an outer side of the display panel; and
a wireless communication module electrically connected with the loop antenna portion.

[12] The mobile terminal according to claim 11, wherein the loop antenna portion is formed in a loop shape between the display panel and the body.

[13] The mobile terminal according to claim 11, comprising a flexible board where the loop antenna portion comprises loop-shaped antenna patterns along an outer side of the display panel.

[14] The mobile terminal according to claim 11, comprising:
a flexible sub board where the display panel and the loop antenna portion are electrically connected; and
a main board electrically connected with the sub board and comprising the wireless communication module and a panel control circuit.

[15] The mobile terminal according to claim 11, comprising a ferrite sheet on one side of the loop antenna portion.

[16] The mobile terminal according to claim 11, comprising:
a mold frame receiving the display panel;
an optical sheet portion under the display panel;
a light guide plate under the optical sheet portion; and
a light source unit on one side of the light guide plate.

[17] The mobile terminal according to claim 16, comprising a reflective sheet under the light guide plate.

[18] The mobile terminal according to claim 16, wherein the display panel comprises:
a main display panel on a front side of the mold frame; and
a sub display panel on a rear side of the mold frame, and
the loop antenna portion is disposed on the outer side of at least one of the main display panel and the sub display panel.

[19] The mobile terminal according to claim 11, wherein the loop antenna portion comprises an antenna for 13.56 MHz communication.

[20] The mobile terminal according to claim 11, wherein the terminal comprises at least one of a bar type, a flip type, a folder type, and a slide type.

[Fig. 1]

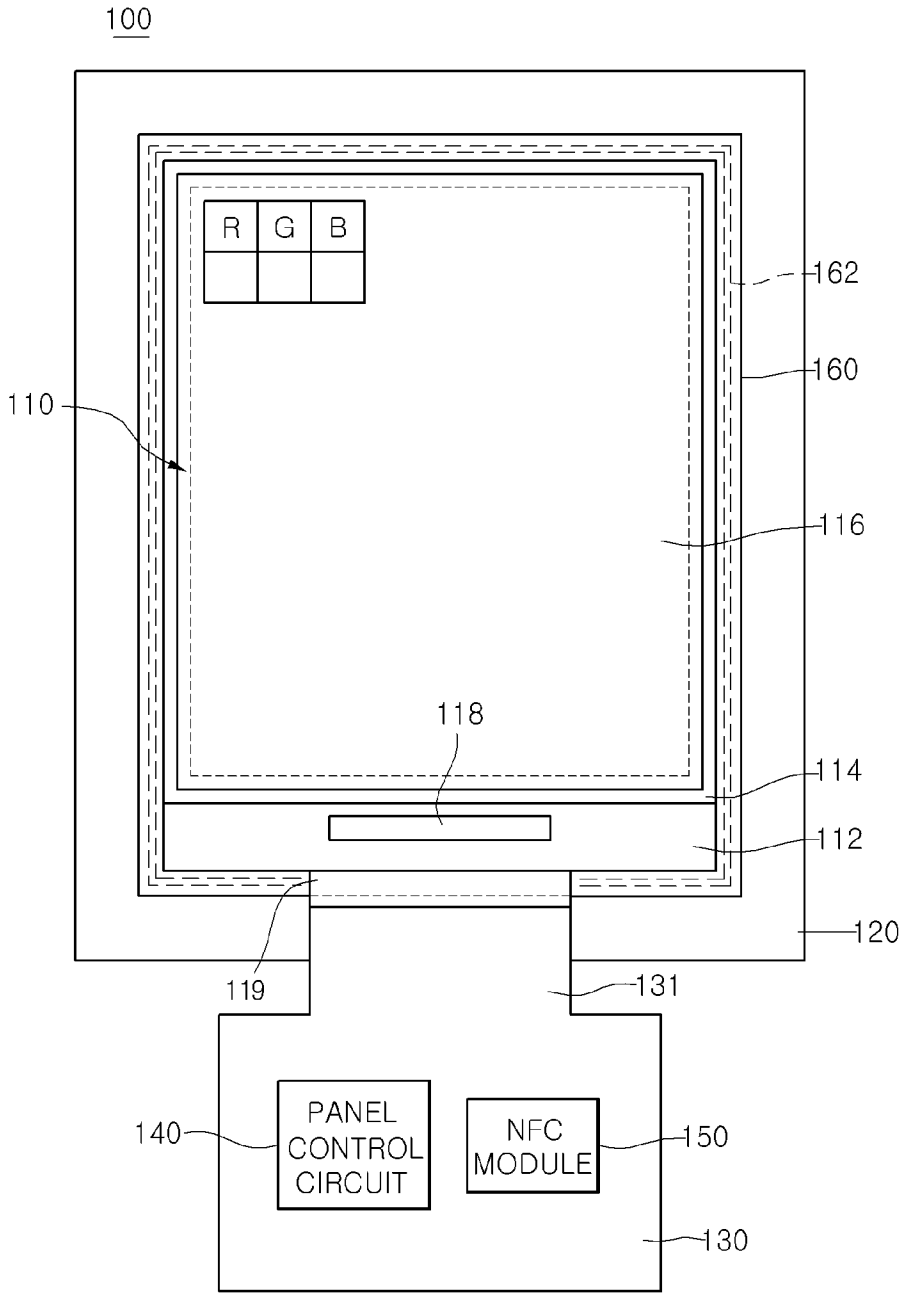
100
R
G
B
162
160
110
116
118
114
112
120
119
131
140
PANEL CONTROL CIRCUIT
NFC MODULE
150
130

[Fig. 2]

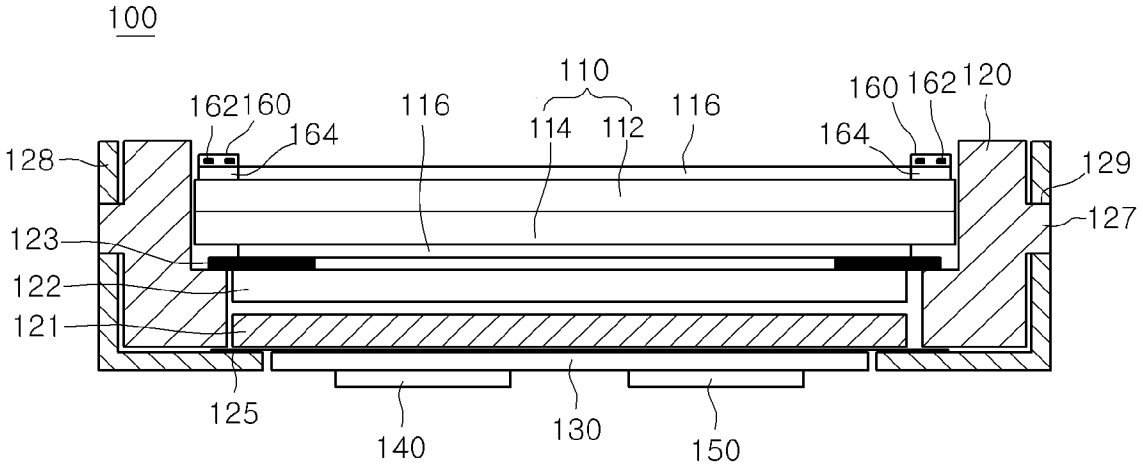
100
110
162
160
164
116
114
112
116
160
162
120
164
128
129
127
123
122
121
125
140
130
150

[Fig. 3]

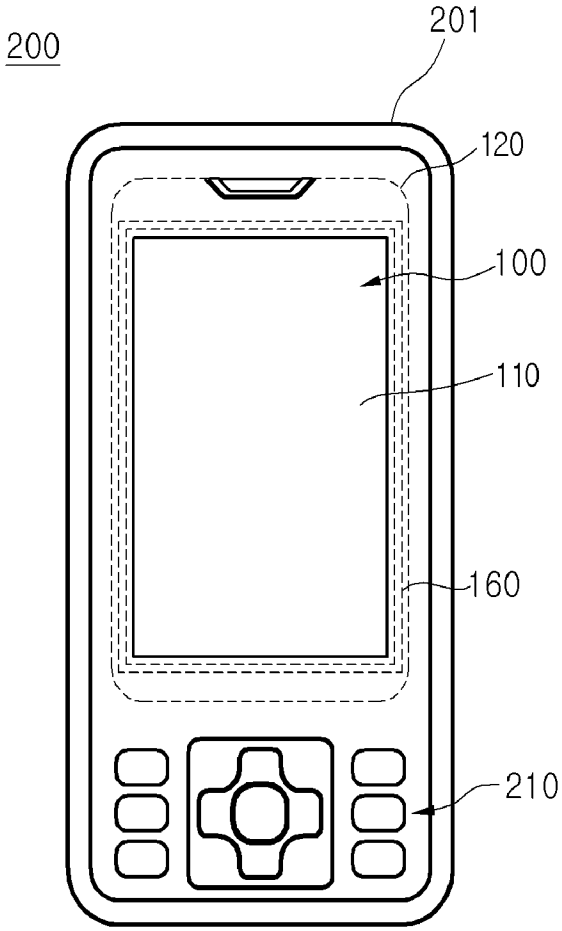
200
201
120
100
110
160
210

[Fig. 4]

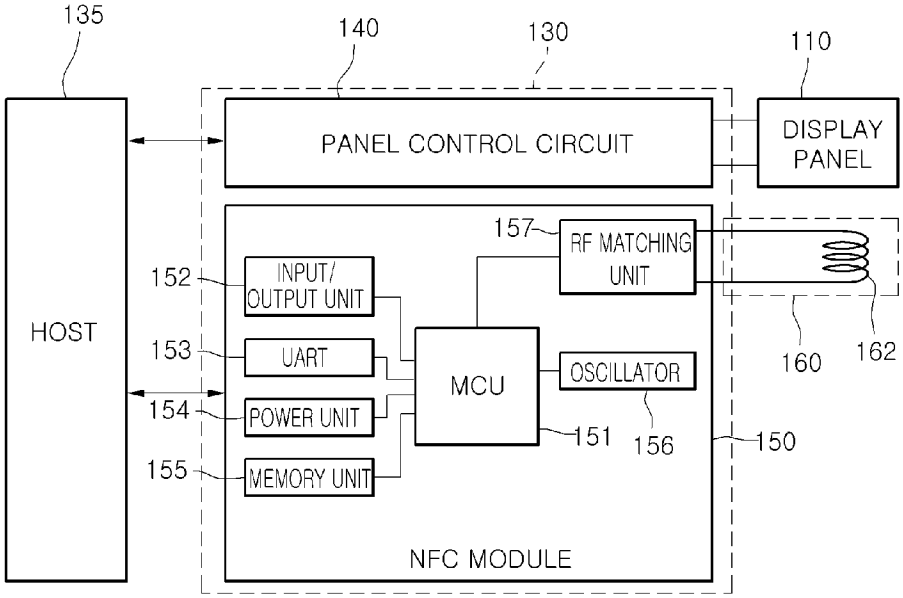
135
140
130
110
HOST
PANEL CONTROL CIRCUIT
DISPLAY PANEL
157
RF MATCHING UNIT
152
INPUT/ OUTPUT UNIT
153
UART
154
POWER UNIT
155
MEMORY UNIT
MCU
OSCILLATOR
151
156
150
160
162
NFC MODULE

[Fig. 5]

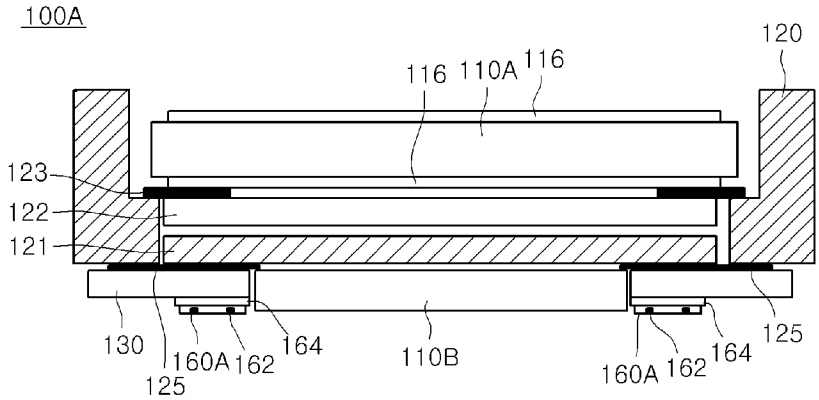

[Fig. 6]

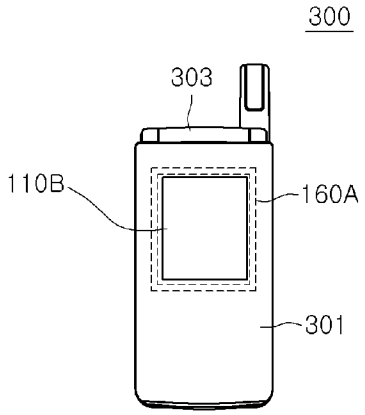
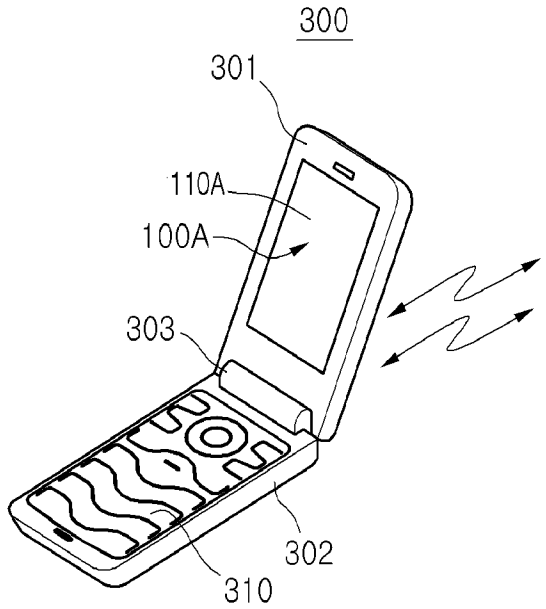
[Fig. 7]