(12) INTERNATIONAL APPLICATION PUBLISHED UNDER THE PATENT COOPERATION TREATY (PCT)

(19) **World Intellectual Property Organization**
International Bureau

(43) **International Publication Date**
7 June 2001 (07.06.2001)

PCT

(10) **International Publication Number**
WO 01/41191 A2

(51) **International Patent Classification⁷:** **H01L**

(21) **International Application Number:** PCT/US00/41580

(22) **International Filing Date:** 25 October 2000 (25.10.2000)

(25) **Filing Language:** English

(26) **Publication Language:** English

(30) **Priority Data:**
09/428,506 27 October 1999 (27.10.1999) US

(71) **Applicant: SEMITOOL, INC.** [US/US]; 655 West Reserve Drive, Kalispell, MT 59901 (US).

(72) **Inventors: CHEN, LinLin**; 121 Hawthorne Avenue, Kalispell, MT 59901 (US). **RITZDORF, Thomas, L.**; 3130 Parkwood, Bigfork, MT 59911 (US).

(74) **Agent: KELBON, Marcia, S.**; Christensen O'Connor Johnson & Kindness PLLC, Suite 2800, 1420 Fifth Avenue, Seattle, WA 98101 (US).

(81) **Designated States** *(national)*: CN, JP, KR, SG.

(84) **Designated States** *(regional)*: European patent (AT, BE, CH, CY, DE, DK, ES, FI, FR, GB, GR, IE, IT, LU, MC, NL, PT, SE).

Published:

— *Without international search report and to be republished upon receipt of that report.*

For two-letter codes and other abbreviations, refer to the "Guidance Notes on Codes and Abbreviations" appearing at the beginning of each regular issue of the PCT Gazette.

(54) Title: METHOD AND APPARATUS FOR FORMING AN OXIDIZED STRUCTURE ON A MICROELECTRONIC WORKPIECE

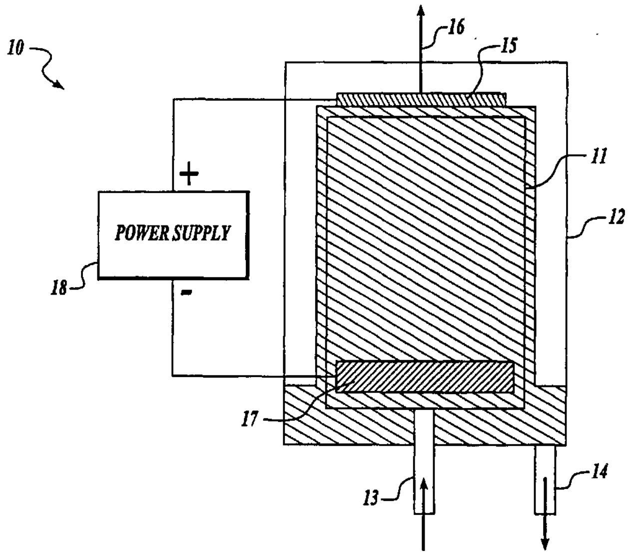

(57) **Abstract:** An apparatus for forming an oxidized structure on a microelectronic workpiece as well as unique methods for forming such structures are set forth. In accordance with one embodiment of the apparatus, the apparatus includes a reactor chamber, an anodizing solution, and a chemical delivery system for delivering the anodizing solution to the reactor. A workpiece support is provided to support the workpiece during processing and includes a contact assembly for providing electrical power to a surface at a side of the workpiece that is to be processed to form the oxidized structure. The contact assembly contacts the workpiece at a large plurality of discrete contact points that are isolated from exposure to the anodizing solution. An electrode spaced from the workpiece support within the reaction chamber contacts the anodizing solution and facilitates the electrochemical reactions to form the oxidized structure. A method for forming an oxidized structure on the surface of a microelectronic workpiece is also set forth. In accordance with one embodiment of the method, an anodizable material is deposited on the surface of the microelectronic workpiece and is then anodized to a predetermined depth that is less than the entire depth of the deposited anodizable material. This method is particularly suitable for forming capacitors that are used in integrated circuits, including in the formation of memory cells. Still further, the anodizable material may be anodized to form a gate.

WO 01/41191 A2

METHOD AND APPARATUS FOR FORMING AN OXIDIZED STRUCTURE ON A MICROELECTRONIC WORKPIECE

BACKGROUND OF THE INVENTION

The present invention is directed to the formation of an oxidized structure on the surface of a workpiece, such as a semiconductor wafer, in the manufacture of microelectronic devices and/or components. More particularly, the present invention is directed to a method and apparatus for forming a high-K dielectric structure on a microelectronic workpiece that is suitable for use in the manufacture of capacitors, memory cells, MOSFET gate oxides, and the like.

The microelectronics manufacturing industry uses high-K dielectric structures in the fabrication of a wide range of devices. For example, high-K dielectric structures are interposed between metallized structures to form capacitors. Such capacitors structures can be used, for example, as discrete components (i.e., decoupling capacitors, etc.) or as constituent components of memory cells (i.e., RAM, ROM, FRAM, DRAM, etc.). High-K dielectric structures are also useful in the formation of the insulated gate regions of MOSFET devices and the like.

High-K dielectrics may be deposited on the surface of a microelectronic workpiece in a number of manners. For example, dielectric materials, such as Ta_2O_5, may be deposited using chemical vapor deposition (CVD), metalorganic chemical vapor deposition (MOCVD), sputtering and electrochemical anodization (ECA).

The manufacturing of integrated thin film capacitors, MOS devices, memory devices, and the like face several technological hurdles before they can be reliable and economical. More specifically, such structures needs to be compatible with the dielectric and metal layers used in the integrated circuit and must be readily formed using economical processes.

The use of an anodization process to form a capacitor's dielectric layer offers significant advantages over other formation techniques. Materials formed from such anodization processes generally provide the highest dielectric constants available for capacitor materials, and the anodization process heals many (but not all) types of defects and enables the dielectric layer to be formed in a controlled and uniform manner. To this end, some researchers have tried to construct a capacitor with aluminum (Al) electrodes for good conductivity and a tantalum pentoxide (Ta_2O_5) dielectric layer for a high dielectric constant. Such capacitor structures are set forth in USPN 5,872,696, entitled "Sputtered and Anodized Capacitors Capable of Withstanding Exposure to High Temperatures" and USPN 5,893,731, entitled "Method for Fabricating Low-cost Integrated Resistor Capacitor Combinations". The teachings of both the '696 and '731 patents are incorporated herein by reference.

In the foregoing '731 patent, anodization takes place in a vertical anodization cell, such as the one illustrated in FIGURE 1A. As shown, the substrate 1 is immersed in an electrolyte 2, which has been placed in an anodization chamber 3. An anodization cathode 4 is also placed in the anodization solution 2. A direct current power supply 5 supplies the voltage for the anodization process. The positive terminal of the direct current power supply 5 is connected to the first capacitor plate 6 and the negative terminal of the direct current power supply is connected to the cathode 4. The cathode 4 is carbon. A stirring machine 8 activates a stirring mechanism 9 located in the anodization solution 2 to stir the anodization solution during the anodization process. During the anodization process the resistor material in the first capacitor plate, which is exposed to the anodization solution, is anodized. In the example set forth in the '731 patent, the Ta_2N in the first capacitor plate is exposed to the anodization solution to form a layer of Ta_2O_5 during the anodization process.

Although the foregoing anodization reactor is suitable for use in laboratory environments in the production of exemplary microelectronic device structures, it is not suitable for large volume manufacturing facilities. Similarly, the foregoing anodization reactor is not suitable for anodizing the increasingly smaller sized structures used in VLSI and ULSI integrated circuits. Still further, the capacitor structures shown in the foregoing patents can be quite difficult to implement been a large-scale manufacturing environment with any degree of accuracy.

The present inventors have recognized the many technical problems that must be overcome in designing device structures and the reactors used in the anodizing of materials deposited on microelectronic workpieces, such as semiconductor wafers, that are used to form such structures. One problem is that uneven current densities occur during the anodizing process while the workpiece is functioning as an anode. This non-uniform distribution of current across the workpiece causes non-uniform anodization of the anodizable material. In those instances in which the anodized material is to function as a dielectric in the formation of a capacitor or memory cell, the non-uniform anodization results in substantial differences in the electrical characteristics of the capacitors and/or memory cells produced across the wafer.

When anodizing a layer of material disposed on a microelectronic workpiece, it is desirable to prevent anodization of the material near the edge of the semiconductor wafer. Anodization of the material near the edge of the semiconductor wafer can degrade the overall anodization process, particularly the later occurring portions of the process. As the anodization process progresses, the area near the contacts providing the anodizing power can become anodized thereby rendering the contacts and contact area non-conducting and terminating the anodization process prematurely.

It is desirable to prevent elelctrochemical reactions on the electrical contacts which are making physical contact to the anodizable materials. Since a high voltage (10-100V) is normally involved during the electrochemical anodization, exposure of the conductive contact material, such as Pt , will result in vigorous oxygen evolution thereby inhibiting current flow to the contact and preventing or otherwise inhibiting the anodization process. Further, gas bubbles reaching the surface of the workpiece can inhibit the uniformity of the oxide material formed during the anodization process.

Beyond the contact related problems discussed above, there are also other problems associated with the known anodizing reactors described above. As device sizes decrease, the need for tighter control over the processing environment increases. This includes control over the contaminants that affect the anodizing process. The moving components of the reactor, which tend to generate such contaminants, should therefore be subject to strict isolation requirements.

Still further, the known anodizing reactors may be difficult to maintain, particularly in a large-scale manufacturing environment. Such difficulties must be overcome if an anodizing reactor design is to be accepted for manufacturing beyond a laboratory environment.

SUMMARY OF THE INVENTION

An apparatus for forming an oxidized structure on a microelectronic workpiece as well as unique methods for forming such structures are set forth. In accordance with one embodiment of the apparatus, the apparatus includes a reactor chamber, an anodizing solution, and a chemical delivery system for delivering the anodizing solution to the reactor. A workpiece support is provided to support the workpiece during processing and includes a contact assembly for providing electrical power to a surface at a side of the workpiece that is to be processed to form the oxidized structure. The contact assembly contacts the workpiece at a large plurality of discrete contact points that are isolated from exposure to the anodizing solution. An electrode spaced from the workpiece support within the reaction chamber contacts the anodizing solution and facilitates the electrochemical reactions to form the oxidized structure.

A method for forming an oxidized structure on the surface of a microelectronic workpiece is also set forth. Without limitation, the method may be carried out in a reactor of the type disclosed herein. In accordance with one embodiment of the method, an anodizable material is deposited on the surface of the microelectronic workpiece and is then anodized to a predetermined depth that is less than the entire depth of the deposited anodizable material. This method is particularly suitable for forming capacitors that are used in integrated circuits, including in the formation of memory cells. Still further, the anodizable material may be anodized to form a gate oxide of a MOSFET or the like.

DETAILED DESCRIPTION OF THE DRAWINGS

FIGURE 1A is a cross-sectional view through an anodizing reactor of the prior art.

FIGURE 1B is a cross-sectional view through an anodizing reactor that is constructed in accordance with various teachings of the present invention.

FIGURE 1C is a cross-sectional view through a further embodiment of an anodizing reactor that is constructed in accordance with various teachings of the present invention.

FIGURE 2 illustrates a specific construction of one embodiment of a reactor bowl suitable for use in the assemblies illustrated in one or both of FIGUREs 1B and 1C.

FIGURE 3 illustrates one embodiment of a reactor head, comprised of a stationary assembly and a rotor assembly that is suitable for use in the assembly illustrated in FIGURE 1.

FIGUREs 4 - 10 illustrate one embodiment of a contact assembly using flexure contacts that is suitable for use in the reactor assembly illustrated in FIGURE 1.

FIGUREs 11 - 12 illustrate two different embodiments of a "Belleville ring" contact structure.

FIGUREs 13 - 15 illustrate one embodiment of a contact assembly using a "Belleville ring" contact structure, such as one of those illustrated in FIGURES 11-12, which is suitable for use in the reactor assembly illustrated in FIGURE 1B.

FIGUREs 16 - 20 illustrate various aspects of one embodiment of a quick-attach mechanism.

FIGURE 21 is a cross-sectional view of the reactor head illustrating the disposition of the reactor head in a condition in which it may accept a workpiece.

FIGURE 22 is a cross-sectional view of the reactor head illustrating the disposition of the reactor head in a condition in which it is ready to present the workpiece to the reactor bowl.

FIGURE 23 illustrates an exploded view one embodiment of the rotor assembly.

FIGURES 24 - 26 are top plan views of integrated processing tools that may incorporate the anodizing reactors in combination with other processing stations.

FIGURES 27A - 27H are cross-sectional views of a workpiece as it is processed to form a capacitor structure in which the dielectric material used in the capacitor structure is formed, at least in part, by oxidizing an anodizable material.

FIGURES 28A – 28I are cross-sectional views of a workpiece as it is processed in accordance with a further exemplary processing sequence to form a capacitor structure in which the dielectric material used in the capacitor structure is formed, at least in part, by oxidizing an anodizable material.

FIGURES 29A – 29F are cross-sectional views of a workpiece as it is processed to form a MOSFET structure in which the gate dielectric material used in the MOSFET structure is formed, at least in part, by oxidizing an anodizable material.

DETAILED DESCRIPTION OF THE INVENTION

BASIC ANODIZING REACTOR COMPONENTS

A basic anodizing reactor is shown generally at 10 of FIGURE 1B. As illustrated, the anodizing reactor 10 includes an interior reservoir 11 and an overflow chamber 12. The interior reservoir 11 is provided with an electrolyte solution through inlet line 13 that fills the interior reservoir 11 and overflows therefrom into the overflow chamber 12. Electrolyte solution going into the overflow chamber 12 ultimately exits through outlet line 14, where it is preferably provided to a principal reservoir (not shown) for replenishment and re-circulation back through inlet 13.

The anodizing reactor 10 also includes a workpiece 15 that is oriented within the reactor so that the side of the workpiece that is to be anodized is presented face down and in contact with the electrolyte solution of the interior reservoir 11. The workpiece 15 may be a semiconductor wafer or the like suitable for the manufacture of microelectronic circuits or components thereof. Since the workpiece 15 is presented to the interior reservoir in a face down orientation as illustrated, the electrolyte solution contacts the surface of the workpiece that is to be anodized before flowing into the overflow chamber 12. This reduces the likelihood that a stagnant region of electrolyte solution will form at the surface of the workpiece 15 and increases the uniformity of the resulting anodization reaction across the workpiece surface. To further increase the uniformity of the resulting anodization reaction, workpiece 15 may be rotated about axis 16 during the anodization process.

A cathode 17 is placed in contact with the electrolyte solution that is within the interior chamber 11. Preferably, the cathode is formed from platinized titanium or another inert material and has a surface area facing workpiece 15 that is the same or greater than the surface area of the workpiece surface that is to be anodized.

A power supply 18 is connected to workpiece 15 and cathode 17 to provide the necessary power for initiating and continuing the anodization reaction at the surface of the workpiece 15. To this end, the "positive" terminal of the power supply 18 is connected to provide power to the surface of workpiece 15 while the "negative" terminal of the power supply 18 is connected to provide power to cathode 17. The power supply 18 may be programmable to provide various current and voltage waveforms such as pulse, sawtooth, D.C., etc.

With reference to FIGURES 1C - 3, there is shown a more detailed version of one embodiment of reactor assembly 20 for oxidizing an anodizable material disposed on the surface of a microelectronic workpiece, such as a semiconductor wafer 25. Generally stated, the reactor assembly 20 is comprised of a reactor head 30 and a corresponding reactor bowl 35. This type of reactor assembly is particularly suited for effecting anodization of films disposed on semiconductor wafers or like workpieces, in which an electrically conductive film of the wafer is anodized

A specific construction of one embodiment of a reactor bowl 35 suitable for use in the reactor assembly 20 is illustrated in FIGURE 2. The anodizing reactor bowl 35 is that portion of the reactor assembly 20 that contains electrolyte, and that directs the solution at a high flow rate against a generally downwardly facing surface of an associated workpiece 25 to be anodized. To this end, electrolyte is circulated through the reactor bowl 35. Attendant to solution circulation, the solution flows from the reactor bowl 35, over the weir-like periphery of the bowl, into a lower overflow chamber 40 of the reactor assembly 20. Solution is drawn from the overflow chamber typically for re-circulation through the reactor.

The temperature of the electrolyte may be monitored and maintained by a temperature sensor and heater, respectively. The sensor and heater are disposed in the circulation path of the electrolyte.

The reactor bowl 35 includes a riser tube 45, within which a conduit 50 is positioned for isolating an electrical path to the cathode 55. The conduit 50 is preferably non-conductive and includes a conductive wire that makes electrical contact with and supports a cathode 55. Cathode 55 is preferably an inert cathode, and, in at least one of the preferred embodiments, a platinized titanium or RuO_2 inert anode is used. The electrically conductive surface of the workpiece, often formed from the anodizable material, functions as an anode.

Electrolyte flows from the inlet conduit 50 through openings at the upper portion thereof. From there, the solution flows about the cathode 55, and through an optional diffuser plate 65 positioned in operative association with and between the anode (workpiece) and the cathode 55. The electrolyte solution may be provided through the reactor at a high flow rate, such as at a rate of 5 gal/min,

The reactor head 30 of the anodizing reactor 20 is preferably comprised of a stationary assembly 70 and a rotor assembly 75, diagrammatically illustrated in FIGURE 3. Rotor assembly 75 is configured to receive and carry an associated wafer 25 or like workpiece, position the wafer in a process-side down orientation within reactor bowl 35, and to rotate or spin the workpiece while joining its electrically-conductive surface in the anodizing circuit of the reactor assembly 20. The reactor head 30 is typically mounted on a lift/rotate apparatus 80, which is configured to rotate the reactor head 30 from an upwardly-facing disposition, in which it receives the wafer to be anodized, to a downwardly facing disposition, in which the surface of the wafer to be anodized is positioned downwardly in reactor bowl 35, generally in confronting relationship to the optional diffusion plate 65. A robotic arm 418, including an end effector, is typically employed for placing the wafer 25 in position on the rotor assembly 75, and for removing the anodized wafer from the rotor assembly.

It will be recognized that other reactor assembly configurations may be used with the inventive aspects of the disclosed reactor head, the foregoing being merely illustrative. Another reactor assembly suitable for use in the foregoing configuration is illustrated in U.S.S.N. 60/143,769, entitled "Workpiece Processor Having Improved Processing Chamber", filed July 12, 1999 (Attorney Docket No. SEM4492P0831US) and further reactor assembly illustrated in U.S.S.N. 60/120,955, filed April 13, 1999, both of which are incorporated herein by reference.

ELECTROLYTES

The anodizing bath that is used in the reactor 35 depends upon the particular material that is to be anodized. A solution suitable for anodizing Ta_2N to form Ta_2O_5 may include, for example, a solution that is between about 0.3 and 0.5 volume percent $H_2C_2O_4$, preferably 0.4 volume percent. Aluminum and Ta structures may also be anodized using a solution containing phosphoric acid and/or carboxylic acid and/or sulfuric acid.

Titanium and titanium alloy structures may be anodized in aqueous solutions of methyl ethyl phosphate, aqueous solutions of boric acid, etc. Such titanium and titanium alloy structures may also be anodized in a substantially non-aqueous solution (less than about 10 volume percent water) of a mineral acid and an organic solvent. Organic solvents suitable for such solutions include those in which the action of proton donating acids is substantially subdued while the mineral acid may be one such as H_3PO_4. Other exemplary constituents suitable for anodizing titanium and titanium alloy structures are set forth below in Table I.

TABLE 1

Constituents Useful for Anodizing	
Phosphoric Acid (85%)	5-25% by volume
Propylene Carbonate	5-95% by volume
Ethylene Carbonate	5-95% by volume
Butyrolactone	5-95% by volume
Sulfolane	5-95% by volume
Dimethyl Sulfoxide	5-95% by volume
N-2 Ethyl Pyrrolidone	5-95% by volume
N-2 Methyl Pyrrolidone	5-95% by volume
Propylene Glycol	5-50% by volume
Dibutyl Phosphate	5-50% by volume
Urea	1-25% by volume
Water	1-10% by volume
4-Picoline	As sufficient
Silver Nitrate	As sufficient
Hydrotalcite	As sufficient
Calcium Phosphate	As sufficient

Any number of conventional solutions used to anodize metals such as Ti, Ta, Al and their alloys may be employed. From the foregoing, it will be recognized that the properties of the high-K dielectric material can be tailored by proper selection of the electrolyte.

Exemplary Processes and Structures

An exemplary process sequence for anodizing a structure on the surface of a workpiece in a reactor assembly, such as the reactor assembly illustrated in FIGURES 1-3, includes the following processing steps. Notably, the entire depth of the anodizable layer of material need not be anodized. Rather, in the exemplary process, only a portion of the depth of the anodizable layer of material is anodized through a combination of constant current and constant voltage anodizing waveforms. In such instances, the processing sequence may include the following steps:

Adjust and/or program (either manually or using the programmable control system) the anodizing system for the appropriate processing parameters, including electrolyte flow rate, pH, temperature, waveform or other sequencing of anodizing power applied, and rotation rate of workpiece during anodization;

Bring the surface of the workpiece that is to be anodized into contact with the electrolyte;

Apply a constant anodization current until the voltage increase across the anodization cell reaches the desired level thereby indicating the depth of the material that has been anodized;

Apply a constant voltage anodizing waveform while allowing the current to go to a value which is about 1% of the current applied by the constant anodization current waveform to thereby generate a substantially defect-free anodized film;

Halt anodization;

Disengage the workpiece from electrolyte;

Spin the workpiece at a high spin rate (i.e., above about 200 rpm) to remove excess electrolyte;

Rinse the workpiece in a spray of deionized water (about 2 min.) and spin dry at a high rotation rate.

Other anodizing process sequences may also be used, the foregoing being merely illustrative. As will be set forth in further detail below, the foregoing processing steps and sequence may be implemented in a single fabrication tool having a plurality of similar processing stations and a programmable robot that transfers the workpieces between such stations.

There are a number of enhancements that may be made to the reactor assembly 20 described above that facilitate uniformity of the anodization over the face of the workpiece. For example, the reactor assembly 20 may use a contact assembly that reduces non-uniformities in the anodization that occur proximate the discrete contacts that are used to provide anodizing power to the surface at the perimeter of the workpiece, including the alternative use of a continuous or a semi-continuous ring contact. Additionally, other enhancements to the reactor assembly 20 may be added to facilitate routine service and/or configurability of the system.

IMPROVED CONTACT ASSEMBLIES

As noted above, the manner in which the anodizing power is supplied to the wafer at the peripheral edge thereof is very important to the overall film quality of the deposited material. Some of the more desirable characteristics of a contact assembly used to provide such anodizing power include, for example, the following:

- uniform distribution of anodizing power about the periphery of the wafer to maximize the uniformity of the anodized film;
- consistent contact characteristics to insure wafer-to-wafer uniformity;
- minimal intrusion of the contact assembly on the wafer periphery to maximize the available area for device production; and
- minimal anodization of the conductive material disposed about the wafer periphery.

To meet one or more of the foregoing characteristics, reactor 20 preferably employs a ring contact assembly 85 that provides either a continuous electrical contact or a high number of discrete electrical contacts with the wafer 25. By providing a more continuous contact with the outer peripheral edges of the semiconductor wafer 25, in this case around the outer circumference of the semiconductor wafer, a more uniform current is supplied to the semiconductor wafer 25 that promotes more uniform current densities. The more uniform current densities enhance uniformity in the depth of the anodized material.

Contact assembly 85, in accordance with a preferred embodiment, includes contact members that provide minimal intrusion about the wafer periphery while concurrently providing consistent contact with the conductive material disposed at the periphery. Contact with the conductive layer is enhanced by using a contact member structure that provides a wiping action against the conductive layer as the wafer is brought into engagement with the contact assembly. This wiping action assists in removing any oxides at the conductive layer surface thereby enhancing the electrical contact between the contact structure and the conductive layer. As a result, uniformity of the current densities about the wafer periphery is increased and the resulting film is more uniform. Further, such consistency in the electrical contact facilitates greater consistency in the anodizing process from wafer-to-wafer thereby increasing wafer-to-wafer uniformity of the anodized material.

Contact assembly 85, as will be set forth in further detail below, also preferably includes one or more structures that provide a barrier, individually or in cooperation with other structures, that separates the contact/contacts, the peripheral edge portions and backside of the semiconductor wafer 25 from the electrolyte. This prevents the anodization of the individual contacts and, further, assists in preventing any exposed portions of the conductive layer near the edge of the semiconductor wafer 25 from being exposed to the anodizing environment. As a result, anodizing of the conductive layer and the appertaining potential for disruption of the anodizing process is substantially limited.

RING CONTACT ASSEMBLIES USING FLEXURE CONTACTS

One embodiment of a contact assembly suitable for use in the assembly 20 is shown generally at 85 of FIGURES 4 - 10. The contact assembly 85 forms part of the rotor assembly 75 and provides electrical contact between the semiconductor wafer 25 and a source of anodizing power. In the illustrated embodiment, electrical contact between the semiconductor wafer 25 and the contact assembly 85 occurs at a large plurality of discrete flexure contacts 90 that are effectively separated from the anodizing environment interior of the reactor bowl 35 when the semiconductor wafer 25 is held and supported by the rotor assembly 75.

The contact assembly 85 may be comprised of several discrete components. With reference to FIGURE 4, when the workpiece that is to be anodized is a circular semiconductor wafer, the discrete components of the contact assembly 85 join together to form a generally annular component having a bounded central open region 95. It is within this bounded central open region 95 that the surface of the semiconductor wafer that is to be anodized is exposed.

With particular reference to FIGURE 6, contact assembly 85 includes an outer body member 100, an annular wedge 105, a plurality of flexure contacts 90, a contact mount member 110, and an interior wafer guide 115. Preferably, annular wedge 105, flexure contacts 90, and contact mount member 110 are formed from platinized titanium while wafer guide 115 and outer body member 100 are formed from a dielectric material that is compatible with the anodizing environment. Annular wedge 105, flexure contacts 90, mount member 110, and wafer guide 115 join together to form a single assembly that is secured together by outer body member 100.

As shown in FIGURE 6, contact mount member 110 includes a first annular groove 120 disposed about a peripheral portion thereof and a second annular groove 125 disposed radially inward of the first annular groove 120. The second annular groove 125 opens to a plurality of flexure channels 130 that are equal in number to the number of flexure contacts 90. As can be seen from FIGURE 4, a total of 36 flexure contacts 90 are employed, each being spaced from one another by an angle of about 10 degrees.

Referring again to FIGURE 6, each flexure contact 90 is comprised of an upstanding portion 135, a transverse portion 140, a vertical transition portion 145, and a wafer contact portion 150. Similarly, wedge 105 includes an upstanding portion 155 and a transverse portion 160. Upstanding portion 155 of wedge 105 and upstanding portion 135 of each flexure contact 90 are secured within the first annular groove 120 of the contact mount member 110 at the site of each flexure channel 130. Self-adjustment of the flexure contacts 90 to their proper position within the overall contact assembly 85 is facilitated by first placing each of the individual flexure contacts 90 in its respective flexure channel 130 so that the upstanding portion 135 is disposed within the first annular groove 120 of the contact mount member 110 while the transition portion 145 and contact portion 150 proceed through the respective flexure channel 130. The upstanding portion 155 of wedge member 105 is then urged into the first annular groove 120. To assist in this engagement, the upper end of upstanding portion 155 is tapered. The combined width of upstanding portion 135 of the flexure contact 90 and upstanding portion 155 of wedge 105 are such that these components are firmly secured with contact mount member 110.

Transverse portion 160 of wedge 105 extends along a portion of the length of transverse portion 140 of each flexure 90. In the illustrated embodiment, transverse portion 160 of wedge portion 105 terminates at the edge of the second annular groove 125 of contact mount member 110. As will be clearer from the description of the flexure contact operation below, the length of transverse portion 160 of wedge 105 can be chosen to provide the desired degree of stiffness of the flexure contacts 90.

Wafer guide 115 is in the form of an annular ring having a plurality of slots 165 through which contact portions 150 of flexures 90 extend. An annular extension 170 proceeds from the exterior wall of wafer guide 115 and engages a corresponding annular groove 175 disposed in the interior wall of contact mount member 110 to thereby secure the wafer guide 115 with the contact mount member 110. As illustrated, the wafer guide member 115 has an interior diameter that decreases from the upper portion thereof to the lower portion thereof proximate contact portions 150. A wafer inserted into contact assembly 85 is thus guided into position with contact portions 150 by a tapered guide wall formed at the interior of wafer guide 115. Preferably, the portion 180 of wafer guide 115 that extends below annular extension 170 is formed as a thin, compliant wall that resiliently deforms to accommodate wafers having different diameters within the tolerance range of a given wafer size. Further, such resilient deformation accommodates a range of wafer insertion tolerances occurring in the components used to bring the wafer into engagement with the contact portions 150 of the flexures 90.

Referring to FIGURE 6, outer body member 100 includes an upstanding portion 185, a transverse portion 190, a vertical transition portion 195 and a further transverse portion 200 that terminates in an upturned lip 205. Upstanding portion 185 includes an annular extension 210 that extends radially inward to engage a corresponding annular notch 215 disposed in an exterior wall of contact mount member 110. A V-shaped notch 220 is formed at a lower portion of the upstanding portion 185 and circumvents the outer periphery thereof. The V-shaped notch 220 allows upstanding portion 185 to resiliently deform during assembly. To this end, upstanding portion 185 resiliently deforms as annular extension 210 slides about the exterior of contact mount member 110 to engage annular notch 215. Once so engaged, contact mount member 110 is clamped between annular extension 210 and the interior wall of transverse portion 190 of outer body member 100.

Further transverse portion 200 extends beyond the length of contact portions 150 of the flexure contacts 90 and is dimensioned to resiliently deform as a wafer, such as at 25, is driven against them. V-shaped notch 220 may be dimensioned and positioned to assist in the resilient deformation of transverse portion 200. With the wafer 25 in proper engagement with the contact portions 150, upturned lip 205 engages wafer 25 and assists in providing a barrier between the electrolyte and the outer peripheral edge and backside of wafer 25, including the flexure contacts 90.

As illustrated in FIGURE 6, flexure contacts 90 resiliently deform as the wafer 25 is driven against them. Preferably, contact portions 150 are initially angled upward in the illustrated manner. Thus, as the wafer 25 is urged against contact portions 150, flexures 90 resiliently deform so that contact portions 150 effectively wipe against surface 230 of wafer 25. In the illustrated embodiment, contact portions 150 effectively wipe against surface 230 of wafer 25 a horizontal distance designated at 235. This wiping action assists in removing and/or penetrating any oxides from surface 230 of wafer 25 thereby providing more effective electrical contact between flexure contacts 90 and the conductive layer at surface 230 of wafer 25.

With reference to FIGUREs 7 and 8, contact mount member 110 is provided with one or more ports 240 that may be connected to a source of purging gas, such as a source of nitrogen. As shown in FIGURE 8, purge ports 240 open to second annular groove 125, which, in turn, operates as a manifold to distribute the purging gas to all of the flexure channels 130 as shown in FIGURE 6. The purging gas then proceeds through each of the flexure channels 130 and slots 165 to substantially surround the entire contact portions 150 of flexures 90. In addition to purging the area surrounding contact portions 150, the purge gas cooperates with the upturned lip 205 of outer body member 100 to affect a barrier to the electrolyte. Further circulation of the purge gas is facilitated by an annular channel 250 formed between a portion of the exterior wall of wafer guide 115 and a portion of the interior wall of contact mount member 110.

As shown in FIGUREs 4, 5 and 10, contact mount member 110 is provided with one or more threaded apertures 255 that are dimensioned to accommodate a corresponding connection plug 260. With reference to FIGUREs 5 and 10, connection plugs 260 provide anodizing power to the contact assembly 85 and, preferably, are each formed from platinized titanium. In a preferred form of plugs 260, each plug 260 includes a body 265 having a centrally disposed borehole 270. A first flange 275 is disposed at an upper portion of body 265 and a second flange 280 is disposed at a lower portion of body 265. A threaded extension 285 proceeds downward from a central portion of flange 280 and secures with threaded borehole 270. The lower surface of flange 280 directly abuts an upper surface of contact mount member 110 to increase the integrity of the electrical connection therebetween.

Although flexure contacts 90 are formed as discrete components, they may be joined with one another as an integral assembly. To this end, for example, the upstanding portions 135 of the flexure contacts 90 may be joined to one another by a web of material, such as platinized titanium, that is either formed as a separate piece or is otherwise formed with the flexures from a single piece of material. The web of material may be formed between all of the flexure contacts or between select groups of flexure contacts. For example, a first web of material may be used to join half of the flexure contacts (e.g., 18 flexure contacts in the illustrated embodiment) while a second web of material is used to join a second half of the flexure contacts (e.g., the remaining 18 flexure contacts in the illustrated embodiment). Different groupings are also possible.

BELLEVILLE RING CONTACT ASSEMBLIES

Alternative contact assemblies are illustrated in FIGUREs 11 – 15. In each of these contact assemblies, the contact members are integrated with a corresponding common ring and, when mounted in their corresponding assemblies, are biased upward in the direction in which the wafer or other substrate is received upon the contact members. A top view of one embodiment of such a structure is illustrated in FIGURE 11A while a perspective view thereof is illustrated in FIGURE 11B. As illustrated, a ring contact, shown generally at 610, is comprised of a common ring portion 630 that joins a plurality of contact members 655. The common ring portion 630 and the contact members 655, when mounted in the corresponding assemblies, are similar in appearance to half of a conventional Belleville spring. For this reason, the ring contact 610 will be hereinafter referred to as a "Bellville ring contact" and the overall contact assembly into which it is placed will be referred to as a "Bellville ring contact assembly".

The embodiment of Belleville ring contact 610 illustrated in FIGUREs 11A and 11B includes 72 contact members 655 and is preferably in formed from platinized titanium. The contact members 655 may be formed by cutting arcuate sections 657 into the interior diameter of a platinized titanium ring. A predetermined number of the contact members 658 have a greater length than the remaining contact members 655 to, for example, accommodate certain flat-sided wafers.

A further embodiment of a Belleville ring contact 610 is illustrated in FIGURE 12. As above, this embodiment is preferably formed from platinized titanium. Unlike the embodiment of FIGUREs 11A and 11B in which all of the contact members 655 extend radially inward toward the center of the structure, this embodiment includes contact members 659 that are disposed at an angle. This embodiment constitutes a single-piece design that is easy to manufacture and that provides a more compliant contact than does the embodiment of FIGUREs 11A and 11B with the same footprint. This contact embodiment can be fixtured into the "Belleville" form in the contact assembly and does not require permanent forming. If the Belleville ring contact 610 of this embodiment is fixtured in place, a complete circumferential structure is not required. Rather the contact may be formed and installed in segments thereby enabling independent control/sensing of the electrical properties of the segments.

A first embodiment of a Bellville ring contact assembly is illustrated generally at 600 in FIGURES 13-15. As illustrated, the contact assembly 600 comprises a conductive contact mount member 605, a Bellville ring contact 610, a dielectric wafer guide ring 615, and an outer body member 625. The outer, common portion 630 of the Bellville ring contact 610 includes a first side that is engaged within a notch 675 of the conductive base ring 605. In many respects, the Belleville ring contact assembly of this embodiment is similar in construction with the flexure contact assembly 85 described above. For that reason, the functionality of many of the structures of the contact assembly 600 will be apparent and will not be repeated here.

Preferably, the wafer guide ring 615 is formed from a dielectric material while contact mount member 605 is formed from a single, integral piece of conductive material or from a dielectric or other material that is coated with a conductive material at its exterior. Even more preferably, the conductive ring 605 and Bellville ring contact 610 are formed from platinized titanium or are otherwise coated with a layer of platinum.

The wafer guide ring 615 is dimensioned to fit within the interior diameter of the contact mount member 605. Wafer guide ring 615 has substantially the same structure as wafer guides 115 and 115b described above in connection with contact assemblies 85 and 85b, respectively. Preferably, the wafer guide ring 615 includes an annular extension 645 about its periphery that engages a corresponding annular slot 650 of the conductive base ring 605 to allow the wafer guide ring 615 and the contact mount member 605 to snap together.

The outer body member 625 includes an upstanding portion 627, a transverse portion 629, a vertical transition portion 632 and a further transverse portion 725 that extends radially and terminates at an upturned lip 730. Upturned lip 730 assists in forming a barrier to the anodizing environment when it engages the surface of the side of workpiece 25 that is being processed. In the illustrated embodiment, the engagement between the lip 730 and the surface of workpiece 25 is the only mechanical seal that is formed to protect the Bellville ring contact 610.

The area proximate the contacts 655 of the Belleville ring contact 610 is preferably purged with an inert fluid, such as nitrogen gas, which cooperates with lip 730 to effect a barrier between the Bellville ring contact 610, peripheral portions and the backside of wafer 25, and the anodizing environment. As particularly shown set forth in FIGUREs 19 and 20, the outer body member 625 and contact mount member 605 are spaced from one another to form an annular cavity 765. The annular cavity 765 is provided with an inert fluid, such as nitrogen, through one or more purge ports 770 disposed through the contact mount member 605. The purged ports 770 open to the annular cavity 765, which functions as a manifold to distribute to the inert gas about the periphery of the contact assembly. A given number of slots, such as at 780, corresponding to the number of contact members 655 are provided and form passages that route the inert fluid from the annular cavity 765 to the area proximate contact members 655.

FIGUREs 14 and 15 also illustrate the flow of a purging fluid in this embodiment of Bellville ring contact assembly. As illustrated by arrows, the purge gas enters purge port 770 and is distributed about the circumference of the assembly 600 within annular cavity 765. The purged gas then flows through slots 780 and below the lower end of contact mount member 605 to the area proximate Bellville contact 610. At this point, the gas flows to substantially surround the contact members 655 and, further, may proceed above the periphery of the wafer to the backside thereof. The purging gas may also proceed through an annular channel 712 defined by the contact mount member 605 and the interior of the compliant wall formed at the lower portion of wafer guide ring 615. Additionally, the gas flow about contact members 655 cooperates with upturned lip 730 effect a barrier at lip 730 that prevents electrolyte from proceeding therethrough.

When a wafer or other workpiece 25 is urged into engagement with the contact assembly 600, the workpiece 25 first makes contact with the contact members 655. As the workpiece is urged further into position, the contact members 655 deflect and effectively wipe the surface of workpiece 25 until the workpiece 25 is pressed against the upturned lip 730. This mechanical engagement, along with the flow of purging gas, effectively isolates the outer periphery and backside of the workpiece 25 as well as the Bellville ring contact 610 from contact with the electrolyte.

Other similar contact assembly designs that have a large number of contacts and that isolate the contacts from the anodizing environment are likewise suitable for use in the disclosed reactor assembly. Such additional contact assembly designs are set forth, for example, in PCT Application _, filed July 9, 1999 (Attorney Docket No. SEM4492P0571PC), which is hereby incorporated by reference.

ROTOR CONTACT CONNECTION ASSEMBLY

In many instances, it may be desirable to have a given reactor assembly 20 function to execute a wide range of anodizing recipes. Execution of a wide range of anodizing recipes may be difficult, however, if the process designer is limited to using a single contact assembly construction. Further, the anodizing contacts used in a given contact assembly construction must be frequently inspected and, sometimes, replaced.

These goals may be addressed by providing a mechanism by which the contact assembly 85 is readily attached and detached from the other components of the rotor assembly 75. Further, a given contact assembly type can be replaced with the same contact assembly type without re-calibration or readjustment of the system.

To be viable for operation in a manufacturing environment, such a mechanism must accomplish several functions including:

1. Provide secure, fail-safe mechanical attachment of the contact assembly to other portions of the rotor assembly;
2. Provide electrical interconnection between the contacts of the contact assembly and a source of anodizing power;
3. Provide a seal at the electrical interconnect interface to protect against the processing environment (e.g., wet chemical environment);
4. Provide a sealed path for the purge gas that is provided to the contact assembly; and
5. Minimize use of tools or fasteners that can be lost, misplaced, or used in a manner that damages the equipment.

FIGURES 16 and 17 illustrate one embodiment of a quick-attach mechanism that meets the foregoing requirements. For simplicity, only those portions of the rotor assembly 75 necessary to understanding the various aspects of the quick-attach mechanism are illustrated in these figures.

As illustrated, the rotor assembly 75 may be comprised of a rotor base member 1205 and a removable contact assembly 1210. Preferably, the removable contact assembly 1210 is constructed in the manner set forth above in connection with contact assembly 85. The illustrated embodiment, however, employs a continuous ring contact. It will be recognized that both contact assembly constructions are suitable for use with the quick-attachment mechanism set forth herein.

The rotor base member 1205 is preferably annular in shape to match the shape of the semiconductor wafer 25. A pair of latching mechanisms 1215 are disposed at opposite sides of the rotor base member 205. Each of the latching mechanisms 1215 includes an aperture 1220 disposed through an upper portion thereof that is dimensioned to receive a corresponding electrically conductive shaft 1225 that extends downward from the removable contact assembly 1210.

The removable contact assembly 1210 is shown in a detached state in FIGURE 16B. To secure the removable contact assembly 1210 to the rotor base member 1205, an operator aligns the electrically conductive shafts 1225 with the corresponding apertures 1220 of the latching mechanisms 1215. With the shafts 1225 aligned in this manner, the operator urges the removable contact assembly 1210 toward the rotor base member 1205 so that the shafts 1225 engage the corresponding apertures 1220. Once the removable contact assembly 1210 is placed on the rotor base member 1205, latch arms 1230 are pivoted about a latch arm axis 1235 so that latch arm channels 1240 of the latch arms 1230 engage the shaft portions 1245 of the conductive shafts 1235 while concurrently applying a downward pressure against flange portions 1247. This downward pressure secures the removable contact assembly 1210 with the rotor base assembly 1205. Additionally, as will be explained in further detail below, this engagement results in the creation of an electrically conductive path between electrically conductive portions of the rotor base assembly 1205 and the anodizing contacts of the contact assembly 1210. It is through this path that the anodizing contacts of the contact assembly 1210 are connected to receive power from an anodizing power supply.

FIGURES 18A and 18B illustrate further details of the latching mechanisms 1215 and the electrically conductive shafts 1225. As illustrated, each latching mechanism 1215 is comprised of a latch body 1250 having aperture 1220, a latch arm 1230 disposed for pivotal movement about a latch arm pivot post 1255, and a safety latch 1260 secured for relatively minor pivotal movement about a safety latch pivot post 1265. The latch body 1250 may also have a purge port 270 disposed therein to conduct a flow of purging fluid to corresponding apertures of the removable contact assembly 210. An O-ring 275 is disposed at the bottom of the flange portions of the conductive shafts 1225

FIGURES 19A – 19C are cross-sectional views illustrating operation of the latching mechanisms 1215. As illustrated, latch arm channels 1240 are dimensioned to engage the shaft portions 1245 of the conductive shafts 1225. As the latch arm 1230 is rotated to engage the shaft portions 1245, a nose portion 1280 of the latch arm 1230 cams against the surface 1285 of safety latch 1260 until it mates with channel 1290. With the nose portion 1280 and corresponding channel 1290 in a mating relationship, latch arm 1230 is secured against inadvertent pivotal movement that would otherwise release removable contact assembly 1210 from secure engagement with the rotor base member 1205.

FIGURES 20A – 20D are cross-sectional views of the rotor base member 1205 and removable contact assembly 1210 in an engaged state. As can be seen in these cross-sectional views, the electrically conductive shafts 1225 include a centrally disposed bore 1295 that receives a corresponding electrically conductive quick-connect pin 1300. It is through this engagement that an electrically conductive path is established between the rotor base member 1205 and the removable contact assembly 1210.

As also apparent from these cross-sectional views, the lower, interior portion of each latch arm 1230 includes a corresponding channel 1305 that is shaped to engage the flange portions 1247 of the shafts 1225. Edge portions of channel 1305 cam against corresponding surfaces of the flange portions 1247 to drive the shafts 1225 against surface 1310 which, in turn, effects a seal with O-ring 1275.

ROTOR CONTACT DRIVE

As illustrated in FIGURES 21, 22 and 23, the rotor assembly 75 includes an actuation arrangement whereby the wafer or other workpiece 25 is received in the rotor assembly by movement in a first direction, and is thereafter urged into electrical contact with the contact assembly by movement of a backing member 310 toward the contact assembly, in a direction perpendicular to the first direction.

As illustrated, the stationary assembly 70 of the reactor head 30 includes a motor assembly 1315 that cooperates with shaft 1320 of rotor assembly 75. Rotor assembly 75 includes a generally annular housing assembly, including rotor base member 1205 and an inner housing 1320. As described above, the contact assembly is secured to rotor base member 1205. By this arrangement, the housing assembly and the contact assembly 1210 together define an opening 1325 through which the workpiece 25 is transversely movable, in a first direction, for positioning the workpiece in the rotor assembly 75. The rotor base member 1205 preferably defines a clearance opening for the robotic arm as well as a plurality of workpiece supports 3130 upon which the workpiece is positioned by the robotic arm after the workpiece is moved transversely into the rotor assembly by movement through opening 1325. The supports 1330 thus support the workpiece 25 between the contact assembly 1210 and the backing member 1310 before the backing member engages the workpiece and urges it against the contact ring.

Reciprocal movement of the backing member 1310 relative to the contact assembly 1210 is effected by at least one spring that biases the backing member toward the contact assembly, and at least one actuator for moving the backing member in opposition to the spring. In the illustrated embodiment, the actuation arrangement includes an actuation ring 1335 which is operatively connected with the backing member 1310, and which is biased by a plurality of springs, and moved in opposition to the springs by a plurality of actuators.

With particular reference to FIGURE 21, actuation ring 1335 is operatively connected to the backing member 1310 by a plurality (three) of shafts 1340. The actuation ring, in turn, is biased toward the housing assembly by three compression coil springs 1345 which are each held captive between the actuation ring and a respective retainer cap 350. By this arrangement, the action of the biasing springs 1345 urges the actuation ring 1335 in a direction toward the housing, with the action of the biasing springs thus acting through shafts 1340 to urge the backing member 1335 in a direction toward the contact assembly 1210. The drive shaft 1360 is operatively connected to inner housing 1320 for effecting rotation of workpiece 25, as it is held between contact assembly 210 and backing member 310, during anodizing processing. The drive shaft 360, in turn, is driven by motor 315 that is disposed in the stationary portion of the reactor head 30.

Rotor assembly 75 is preferably detachable from the stationary portion of the reactor head 30 to facilitate maintenance and the like. Thus, drive shaft 1360 is detachably coupled with the motor 1315. In accordance with the preferred embodiment, the arrangement for actuating the backing member 1310 also includes a detachable coupling, whereby actuation ring 1335 can be coupled and uncoupled from associated actuators which act in opposition to biasing springs 1345.

Actuation ring 1335 includes an inner, interrupted coupling flange 1365. Actuation of the actuation ring 1335 is effected by an actuation coupling 1370 of the stationary assembly 70, which can be selectively coupled and uncoupled from the actuation ring 1335. The actuation coupling 1370 includes a pair of flange portions 1375 which can be interengaged with coupling flange 1365 of the actuation ring 1335 by limited relative rotation therebetween. By this arrangement, the actuation ring 1335 of the rotor assembly 75 can be coupled to, and uncoupled from, the actuation coupling 1370 of the stationary assembly 70 of the reactor head 30.

Actuation coupling 370 is movable in a direction in opposition to the biasing springs 1345 by a plurality of pneumatic actuators 1380 mounted on a frame of the stationary assembly 70. Each actuator 1380 is operatively connected with the actuation coupling 1370 by a respective drive member 1385, each of which extends generally through the frame of the stationary assembly 70.

There is a need to isolate the foregoing mechanical components from other portions of the reactor assembly 20. A failure to do so will result in contamination of the processing environment (here, a wet chemical anodizing environment). Additionally, depending on the particular process implemented in the reactor 20, the foregoing components can be adversely affected by the processing environment.

To effect such isolation, a bellows assembly 1390 is disposed to surround the foregoing components. The bellows assembly 1390 comprises a bellows member 1395, preferably made from Teflon, having a first end thereof secured at 1400 and a second end thereof secured at 1405. Such securement is preferably implemented using the illustrated liquid-tight, tongue-and-groove sealing arrangement. The convolutes 1410 of the bellows member 1395 flex during actuation of the backing plate 1310.

WAFER LOADING/PROCESSING OPERATIONS

Operation of the reactor head 30 will be appreciated from the above description. Loading of workpiece 25 into the rotor assembly 75 is effected with the rotor assembly in a generally upwardly facing orientation, such as illustrated in FIGURE 3. Workpiece 25 is moved transversely through the opening 325 defined by the rotor assembly 75 to a position wherein the workpiece is positioned in spaced relationship generally above supports 1330. A robotic arm 418 is then lowered (with clearance opening 325 accommodating such movement), whereby the workpiece is positioned upon the supports 1330. The robotic arm 418 can then be withdrawn from within the rotor assembly 75.

The workpiece 25 is now moved perpendicularly to the first direction in which it was moved into the rotor assembly. Such movement is effected by movement of backing member 1310 generally toward contact assembly 1210. It is presently preferred that pneumatic actuators 1380 act in opposition to biasing springs 1345 which are operatively connected by actuation ring 1335 and shafts 1340 to the backing member 1310. Thus, actuators 1380 are operated to permit springs 1345 to bias and urge actuation ring 1335 and, thus, backing member 1310, toward contact 210. FIGURE 22 illustrates the disposition of the reactor head 30 in a condition in which it may accept a workpiece, while FIGURE 21 illustrates the disposition of the reactor head in a condition in which it is ready to present the workpiece to the reactor bowl 35.

In the preferred form, the connection between actuation ring 1335 and backing member 1310 by shafts 1340 permits some "float". That is, the actuation ring and backing member are not rigidly joined to each other. This preferred arrangement accommodates the common tendency of the pneumatic actuators 1380 to move at slightly different speeds, thus assuring that the workpiece is urged into substantial uniform contact with the anodizing contacts of the contact assembly 1210 while avoiding excessive stressing of the workpiece, or binding of the actuation mechanism.

With the workpiece 25 firmly held between the backing member 1310 and the contact assembly 1210, lift and rotate apparatus 80 rotates the reactor head 30 and lowers the reactor head into a cooperative relationship with reactor bowl 35 so that the surface of the workpiece is placed in contact with the surface of the electrolyte (i.e., the meniscus of the electrolyte) within the reactor vessel. FIGURE 1 illustrates the apparatus in this condition. If a contact assembly such as contact assembly 85 is used in the reactor 20, the contact assembly 85 seals the entire peripheral region of the workpiece. Depending on the particular anodizing process implemented, it may be useful to insure that any gas which accumulates on the surface of the workpiece is permitted to vent and escape. Accordingly, the surface of the workpiece may be disposed at an acute angle, such as on the order of two degrees from horizontal, with respect to the surface of the solution in the reactor vessel. This facilitates venting of gas from the surface of the workpiece during the anodizing process as the workpiece, and associated backing and contact members, are rotated during processing. Circulation of electrolyte within the reactor bowl 35, as electrical current is passed through the workpiece and the electrolyte, effects the desired anodizing of the anodizable material on the surface of the workpiece.

A number of features of the present reactor facilitate efficient and cost-effective oxidation of an anodizable material on workpieces such as semiconductor wafers. By use of a contact assembly having substantially continuous contact in the form of a large number of sealed, compliant discrete contact regions, a high number of anodic contacts are provided while minimizing the required number of components. The actuation of the backing member 1310 is desirably effected by a simple linear motion, thus facilitating precise positioning of the workpiece, and uniformity of contact with the contact ring. The isolation of the moving components using a bellows seal arrangement further increases the integrity of the anodizing process.

Maintenance and configuration changes are easily facilitated through the use of the detachable contact assembly 1210. Further, maintenance is also facilitated by the detachable configuration of the rotor assembly 75 from the stationary assembly 70 of the reactor head. The contact assembly provides excellent distribution of anodizing power to the surface of the workpiece, while the preferred provision of the peripheral isolation region protects the contacts from the anodizing environment (e.g., contact with the electrolyte). The perimeter seal also desirably prevents anodization at the peripheral portion of the workpiece.

INTEGRATED ANODIZATION TOOL

FIGURES 26 through 28 are top plan views of integrated processing tools, shown generally at 1450, 1455, and 1500 that may be used to anodize an anodizable material at the surface of a microelectronic workpiece, such as a semiconductor wafer. Processing tools 1450 and 1455 are each based on tool platforms developed by Semitool, Inc., of Kalispell, Montana. The processing tool platform of the tool 1450 is sold under the trademark LT-210™, the processing tool platform of the tool 1455 is sold under the trademark LT-210C™, and the processing tool 1500 is sold under the trademark EQUINOX™ . The principal difference between the tools 1450, 1455 is in the footprints required for each. The platform on which tool 1455 is based has a smaller footprint than the platform on which tool 1455 is based. Additionally, the platform on which tool 1450 is based is modularized and may be readily expanded. Each of the processing tools 1450, 1455, and 1500 are computer programmable to implement user entered processing recipes.

Each of the processing tools 1450, 1455, and 1500 include an input/output section 1460, a processing section 1465, and one or more robots 1470. The robots 1470 for the tools 1450, 1455 move along a linear track. The robot 1470 for the tool 1500 is centrally mounted and rotates to access the input/output section 1460 and the processing section 1465. Each input/output section 1460 is adapted to hold a plurality of workpieces, such as semiconductor wafers, in one or more workpiece cassettes. Processing section 1465 includes a plurality of processing stations 1475 that are used to perform one or more fabrication processes on the semiconductor wafers. The robots 1470 are used to transfer individual wafers from the workpiece cassettes at the input/output section 1460 to the processing stations 1475, as well as between the processing stations 1475.

One or more of the processing stations 1475 are configured as anodizing assemblies, such as the anodizing reactor assembly described above. For example, each of the processing tools 1450 and 1455 may include eight anodizing reactors and a single pre-wet/rinse station. The pre-wet/rinse station is preferably one of the type available from Semitool, Inc.

FURTHER EXEMPLARY PROCESSES AND STRUCTURES EMPLOYING ANODIZABLE MATERIALS

The foregoing reactor design may be used to implement a wide range of processes for depositing an oxidized material. Such materials include, for example, tantalum pentoxide (Ta_2O_5), as well as oxidized BST, BZT, and other perovskite materials. Microelectronic structures that use such materials include, for example, capacitors, memory cells, resistors, MOSFET gate dielectrics, etc.

Formation of the oxidized material layers may take place in accordance with one or more oxidation reactions. For example, the oxidized material may be formed in an oxidation reaction that takes place between a layer of material that has been deposited at the surface of the workpiece and the electrolyte. Tantalum pentoxide may be formed in this manner by first depositing a tantalum-containing layer on the surface of the workpiece and subsequently subjecting it to an anodization process within the anodization reactor. Likewise, barium-zirconium-titanium (BZT) or barium-strontium-titanium (BST) metal alloys may be deposited using a vacuum technique and subsequently oxidized in a reactor of the type disclosed above.

Oxidized material layers may also be formed in an oxidation reaction that takes place within the electrolyte and is followed by subsequent deposition thereof on the surface of the workpiece. For example, nickel hydroxide may be formed electrochemically when a species of OH^- is formed at the workpiece surface and subsequently combines with metal ions, such as Ni(II) to form nickel hydroxide that is precipitated onto the workpiece surface. In such instances, the workpiece may be subsequently cured at an elevated temperature to form the metal oxide. This same process mechanism may be used to form BZT or BST oxides. In such instances, the electrolyte includes soluble ions for barium, titanium, and zirconium or strontium.

Referring to FIGURE 27A-H, the formation of an exemplary capacitor structure in which the dielectric layer is formed anodically in a reactor, such as the reactor described above, is set forth. In the exemplary embodiment, the microelectronic workpiece is in the form of a silicon substrate 3010. With reference to FIGURE 27A, the top surface of the substrate is oxidized to form a layer of silicon dioxide 3015 over which an anodizable layer 3020 is formed. Here, layer 3020 is formed of tantalum, but may be formed of any anodizable material, including those described above. Standard deposition processes well known to the art may be used to deposit the layer, such as direct-current (D.C.) magnetron sputtering or the like.

As illustrated in FIGURES 27B - 27D, tantalum layer 3020 is partially oxidized during an anodization process to form a dielectric layer of tantalum pentoxide 3025. To this end, a patterned mask 3030, such as a hard mask or a patterned photoresist layer, is deposited over the tantalum layer 3020 so that only selected areas of the tantalum layer 3020 are exposed to the oxidizing fluid used in the anodization process. This allows selected formation of a region of tantalum pentoxide 3035 in the tantalum layer 3020. Anodization preferably takes place in a reactor chamber of the type described above in which the workpiece is presented in a process side down manner to an upwardly directed flow of oxidizing fluid disposed in a process chamber. Preferably, the tantalum layer 3020 is only oxidized to a predetermined depth. The predetermined depth is dependent on the dielectric characteristics needed to construct the resultant capacitor so that it has the desired electrical properties. After the anodization process is completed, the patterned mask layer 3030 is removed thereby leaving the structure illustrated in FIGURE 27D.

The tantalum layer 3020 is then subject to an etching process so as to leave a single plate of the capacitor disposed below the tantalum pentoxide layer 3035. To this end, as illustrated in FIGURES 27E - 27G, a further patterned mask layer 3040, such as a patterned photoresist layer, is disposed over the layer of tantalum pentoxide 3035 to protect the tantalum pentoxide layer 3035 during the etching process. After application of the further patterned mask layer 3040, the workpiece is subjected to a tantalum etching process. The tantalum etching process may be carried out using a wet or dry etching process. However, a dry etching process, such as reactive ion etching, is preferred because of its anisotropic etching characteristics. Execution of the tantalum etching process leaves the structure illustrated in FIGURE 27F.

As illustrated in FIGURE 27G, the patterned mask layer 3040 is removed. This leaves a patterned layer of tantalum 3020 forming a plate of the capacitor, and a patterned layer of tantalum pentoxide 3035 forming the dielectric layer of the capacitor. As shown in FIGURE 27H, a further patterned metallization layer 3045 is disposed over the patterned tantalum pentoxide layer 3035 to form the complementary capacitor plate and completing the basic capacitor structure, shown generally at 3050. The further patterned metallization layer 3045 may be formed from any conductive material typically used in the formation of a capacitor plate. Here, the further patterned metallization layer 3045 is formed from tantalum. Subsequent processes are used to provide interconnect lines that electrically connect the plates of the capacitor in the desired circuit.

A further exemplary processing sequence for forming a capacitor structure that employs an anodized dielectric layer is set forth in FIGURES 28A - 28I. In much the same way as the foregoing process, this process sequence starts with the provision of a layer of an anodizable material 3060, such as tantalum, that is disposed over a dielectric material, such as a silicon dioxide. Unlike the foregoing process, however, the entire surface of the tantalum layer 3060 is anodized to form the tantalum pentoxide dielectric material 3065. This aspect of the processing is illustrated in FIGURE 28B.

After the tantalum layer 3060 has been oxidized to the desired depth, tantalum pentoxide layer 3065 is subjected to a patterning process. One such patterning process is exemplified in FIGURES 28C - 28E in which a patterned mask layer 3070, such as a patterned photoresist layer, is disposed over those regions of the tantalum pentoxide layer 3065 that are to be retained on microelectronic workpiece. The workpiece is then subject to an etching process to remove the exposed portions of the tantalum pentoxide layer 3065. The mask layer 3070 is then removed thereby leaving the structure illustrated in FIGURE 28E.

Formation of the capacitor plate beneath the remaining tantalum pentoxide structure is illustrated in FIGURES 28F - 28I. As shown, a further patterned mask layer 3085 is disposed over the remaining tantalum pentoxide structure 3065 and, optionally, a portion of the tantalum layer 3060. Exposed portions of the tantalum layer 3060 are then subject to an etching process, preferably, one having anisotropic etching characteristics. After etching and removal of the patterned mask layer 3085,the structure of FIGURE 28H remains in which the tantalum layer forms one plate of the capacitor and the tantalum pentoxide layer forms the dielectric. As above, a complementary capacitor plate is formed by the application of a patterned metal layer over the tantalum pentoxide structure. The resulting capacitor structure is illustrated in FIGURE 28I.

An exemplary process for forming a gate oxide layer for a MOSFET is illustrated in FIGURES 29A-29F. The process picks-up with the provision of a semiconductor substrate having the requisite doped regions. Without limitation, the doped regions may be provided to form the n-channel device shown in FIGURE 29A in which a centrally disposed p-region 3160 is flanked by peripheral n-regions 3165.

With reference to FIGURES 29B and 29C, a layer of an anodizable material 3170 is disposed over the surface of the semiconductor workpiece. Here, the anodizable material 3170 is tantalum, but may be any of the anodizable materials described above. This tantalum layer 3170 is then subjected to an anodization process, such as one of those described above, in a reactor, such as the one described above, to form a layer of tantalum pentoxide 3175. Unlike the anodization process described above in connection with the formation of a capacitor, the anodization process used to form the gate oxide is preferably executed to oxidize the entire depth of the tantalum layer 3170.

After oxidation of the tantalum is completed to form the tantalum pentoxide, the tantalum pentoxide layer 3175 is patterned so that it overlies only those portions of the doped regions (n-regions 3165 and/or p-region 3160) necessary to isolate a subsequently applied gate metallization from electrical contact with the doped regions to provide the desired electrical field characteristics of the MOSFET. This process is illustrated in FIGURES 29D - 29F.

As shown in FIGURE 29D, a mask layer 3180 is provided over selected portions of the tantalum pentoxide layer 3175 that are to constitute the gate dielectric structures. With the mask layer 3180 in place, the portions of the tantalum pentoxide layer 3175 that are unprotected by the mask layer 3180 are etched and effectively removed to leave the structure illustrated in FIGURE 29E. The mask layer 3180 is then removed and a patterned metallization layer 3190 is formed over the remaining tantalum pentoxide gate structure to substantially complete the gate structure of the MOSFET. Further interconnect metallization is also applied to electrically connect the remaining doped regions (here, region(s) 3165) in the desired electrical circuit.

Numerous modifications may be made to the foregoing system without departing from the basic teachings thereof. Although the present invention has been described in substantial detail with reference to one or more specific embodiments, those of skill in the art will recognize that changes may be made thereto without departing from the scope and spirit of the invention as set forth in the appended claims.

The embodiments of the invention in which an exclusive property or privilege is claimed are defined as follows:

1. An apparatus for forming an oxidized structure on a microelectronic workpiece comprising:

a reactor chamber;

an anodizing solution;

a chemical delivery system for delivering the anodizing solution to the reactor;

a workpiece support including a contact assembly for providing electrical power to a surface at a side of the workpiece that is to be processed to form the oxidized structure, the contact contacting the workpiece at a large plurality of discrete contact points, the contact points being isolated from exposure to the anodizing solution;

an electrode spaced from the workpiece support within the reaction chamber and contacting the anodizing solution.

2. An apparatus as claimed in claim 1, wherein the anodizing solution comprises an aqueous solution of methyl ethyl phosphate.

3. An apparatus as claimed in claim 1, wherein the anodizing solution comprises an aqueous solution of boric acid.

4. An apparatus as claimed in claim 1, wherein the anodizing solution comprises a non-aqueous solution of of a mineral acid and an organic solvent.

5. Apparatus as claimed in claim reference claim 1, wherein the contact assembly comprises:

a plurality of contacts disposed to contact a peripheral edge of the surface of the workpiece, the plurality of contacts executing a wiping action against the surface of the workpiece as the workpiece is brought into engagement therewith, and

a barrier disposed interior of the plurality of contacts and including a member disposed to engage the surface of the workpiece to effectively isolate the plurality of contacts from the electroplating solution.

6. A reactor as claimed in claim 5, wherein the plurality of contacts are in the form of discrete flexures.

7. A reactor as claimed in claim 5, wherein the plurality of contacts are in the form of a Belleville ring contact.

8. A reactor as claimed in claim 5, and further comprising a flow path disposed in the contact assembly for providing a purging gas to the plurality of contacts and the peripheral edge of the workpiece.

9. A reactor as claimed in claim 8, wherein the purging gas assists in effecting the barrier.

10. An apparatus for forming an oxidized structure on a microelectronic workpiece comprising:

a moveable head including a rotor and rotor drive adapted to rotate the workpiece during processing thereof;

a processing base;

an anodizing solution disposed in the processing base;

a chemical delivery system connected to deliver the anodizing solution;

a contact assembly disposed on the rotor of the moveable head, the contact assembly providing electrical power to a peripheral edge surface of a side of the workpiece that is to be plated, the contact assembly contacting the workpiece at a large plurality of discrete contact points, the contact points being isolated from exposure to the anodizing solution;

an actuator disposed to move the moveable head between a loading position in which the workpiece may be placed for support on the rotor and into engagement with the contact, and a processing position in which the surface of the workpiece that is to be electroplated is brought into contact with the anodizing solution with the side of the wafer that is to be processed in a face down orientation during processing in the anodizing solution;

an electrode disposed in the anodizing solution in the processing base.

11. An apparatus as claimed in claim 10, wherein the anodizing solution comprises an aqueous solution of methyl ethyl phosphate.

12. An apparatus as claimed in claim 10, wherein the anodizing solution comprises an aqueous solution of boric acid.

13. An apparatus as claimed in claim 10, wherein the anodizing solution comprises a non-aqueous solution of of a mineral acid and an organic solvent.

14. Apparatus as claimed in claim reference claim 10, wherein the contact assembly comprises:

a plurality of contacts disposed to contact a peripheral edge of the surface of the workpiece, the plurality of contacts executing a wiping action against the surface of the workpiece as the workpiece is brought into engagement therewith, and

a barrier disposed interior of the plurality of contacts and including a member disposed to engage the surface of the workpiece to effectively isolate the plurality of contacts from the electroplating solution.

15. A reactor as claimed in claim 14, wherein the plurality of contacts are in the form of discrete flexures.

16. A reactor as claimed in claim 14, wherein the plurality of contacts are in the form of a Belleville ring contact.

17. A reactor as claimed in claim 14, and further comprising a flow path disposed in the contact assembly for providing a purging gas to the plurality of contacts and the peripheral edge of the workpiece.

18. A reactor as claimed in claim 17, wherein the purging gas assists in effecting the barrier.

19. A method for forming an oxidized structure on the surface of a microelectronic workpiece comprising the steps of:

depositing an anodizable material on the surface of the microelectronic workpiece;

anodizing the anodizable material to a predetermined depth, the predetermined depth being less than the entire depth of the deposited anodizable material.

20. A method as set forth in claim 19, wherein the anodizable material is selected from the group of anodizable materials comprising titanium and titanium alloys.

21. A method as set forth in claim 19, wherein the anodizable material is comprised of a perovskite material.

22. A method as set forth in claim 21, wherein the anodizable material is comprised of a perovskite material selected from the group consisting of barium-zirconium-titanium and barium-strontium-titanium.

23. A method as set forth in claim 19, wherein the anodizable material is selected from the group of anodizable materials comprising tantalum and tantalum alloys.

24. A method as set forth in claim 19, wherein the non-anodized portions of the anodizable layer of material form a first plate of a capacitor.

25. A method as set forth in claim 24, and further comprising the step of depositing a conductive layer over at least a portion of the anodized portions of the anodizable layer of material to form a second plate of a capacitor opposite the first plate.

26. A method for forming an oxidized structure on the surface of a microelectronic workpiece comprising the steps of:

bringing a surface of the microelectronic workpiece into contact with an electrolyte solution;

precipitating an oxidized material formed in the electrolyte solution onto the surface of the microelectronic workpiece.

27. A method as set forth in claim 26, wherein the oxide material is nickel hydroxide.

28. A method for forming a gate region of a MOSFET comprising the steps of:

providing a semiconductor substrate that has been doped to form a channel region;

depositing an anodizable material above at least the channel region;

anodizing at least a portion of the anodizable material to form a gate oxide above at least the channel region;

depositing a metal to form a gate electrode above the gate oxide.

29. A method as set forth in claim 28, wherein the anodizable material is selected from the group of anodizable materials comprising titanium and titanium alloys.

30. A method as set forth in claim 28, wherein the anodizable material is comprised of a perovskite material.

31. A method as set forth in claim 30, wherein the anodizable material is comprised of a perovskite material selected from the group consisting of barium-zirconium-titanium and barium-strontium-titanium.

32. A method as set forth in claim 28, wherein the anodizable material is selected from the group of anodizable materials comprising tantalum and tantalum alloys.

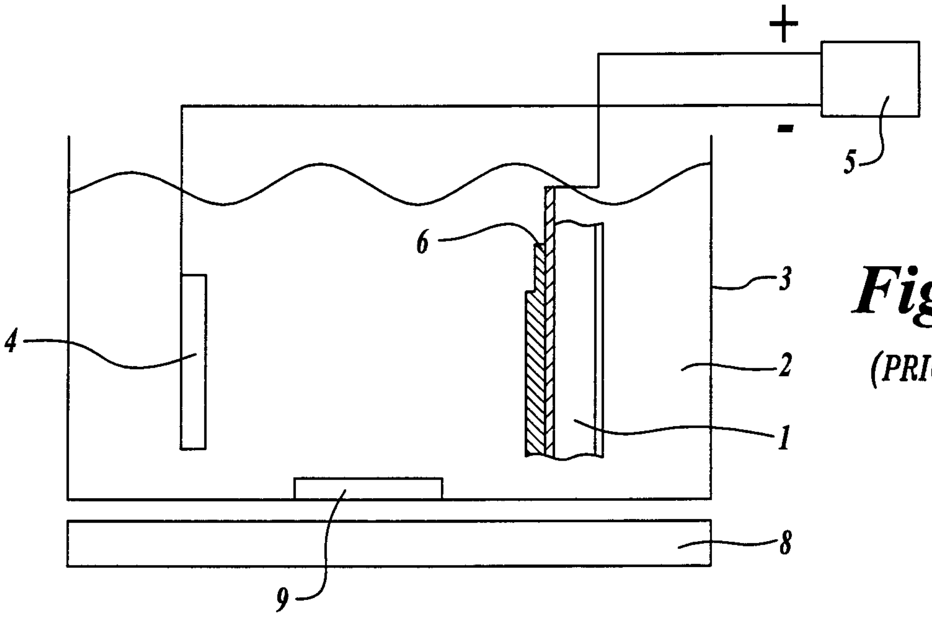

Fig. 1A
(PRIOR ART)

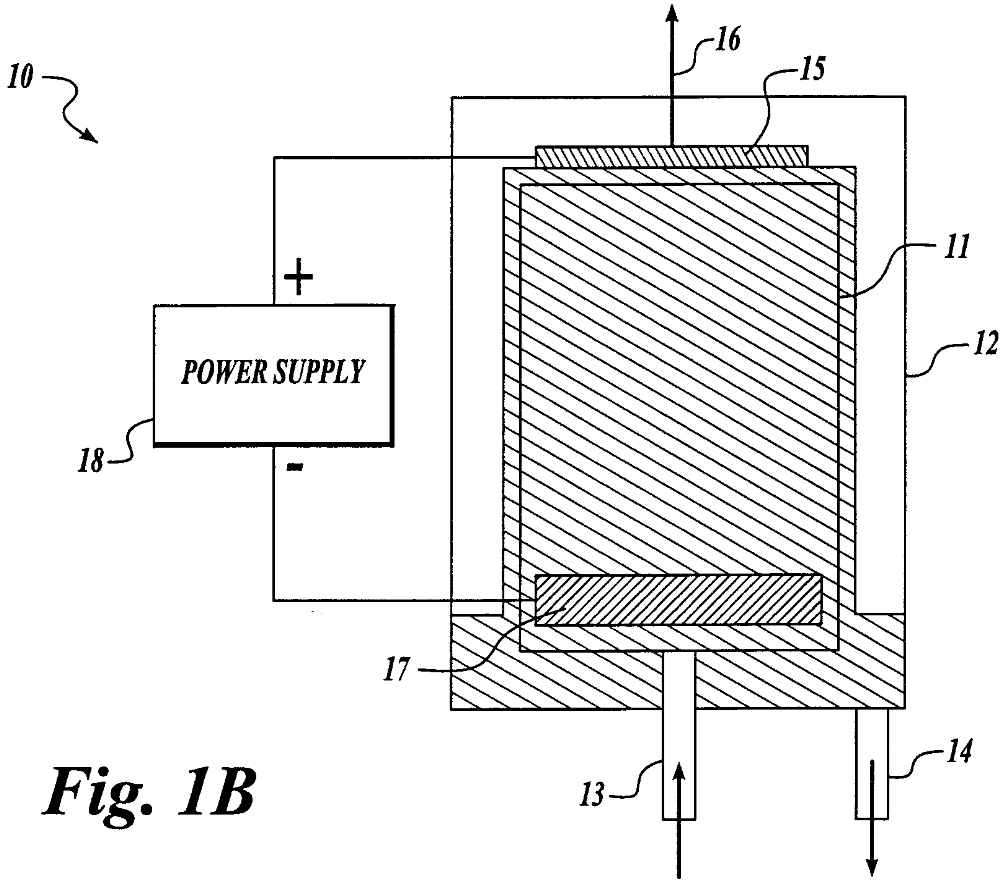

Fig. 1B

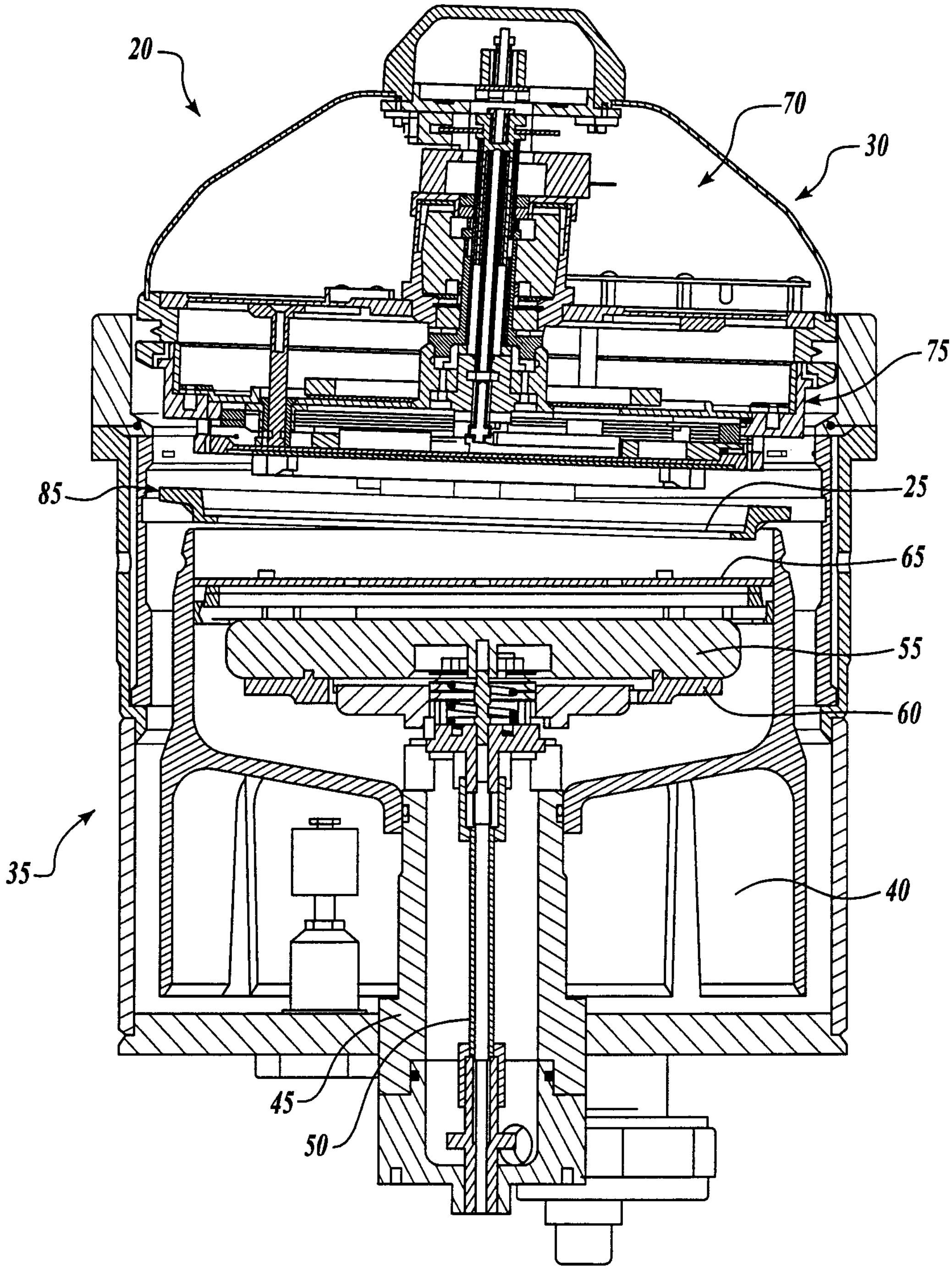

Fig. 1C

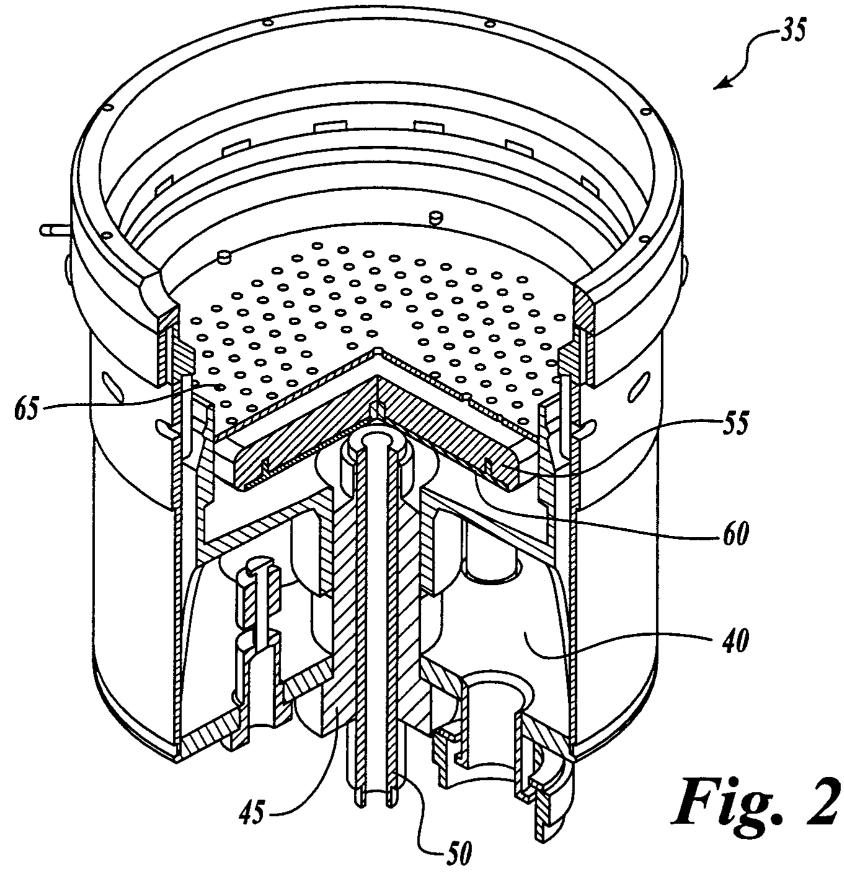

Fig. 2

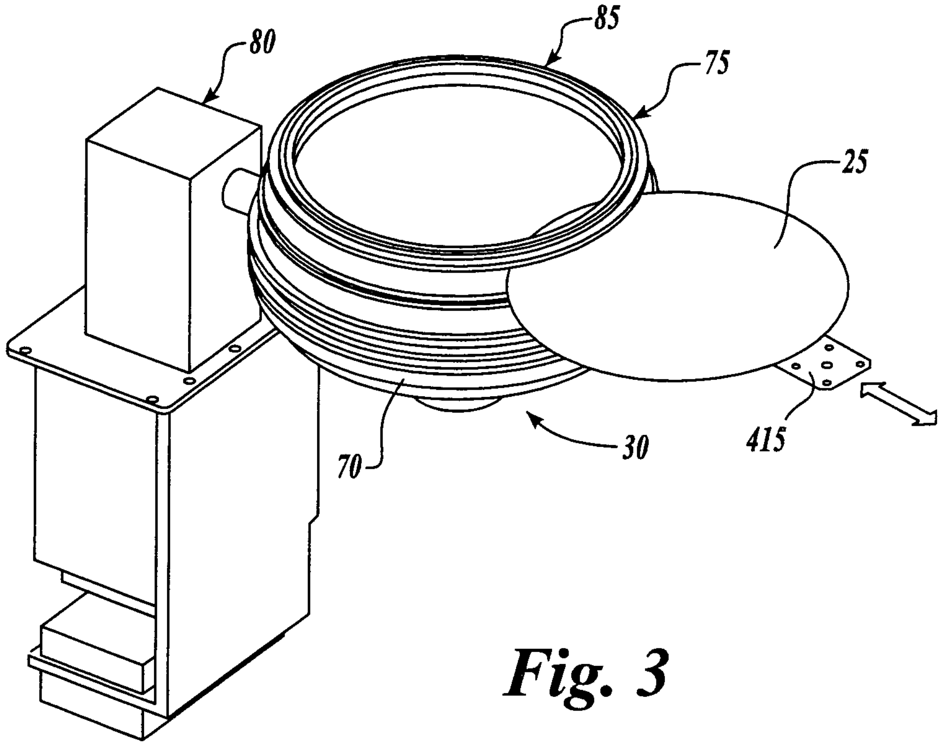

Fig. 3

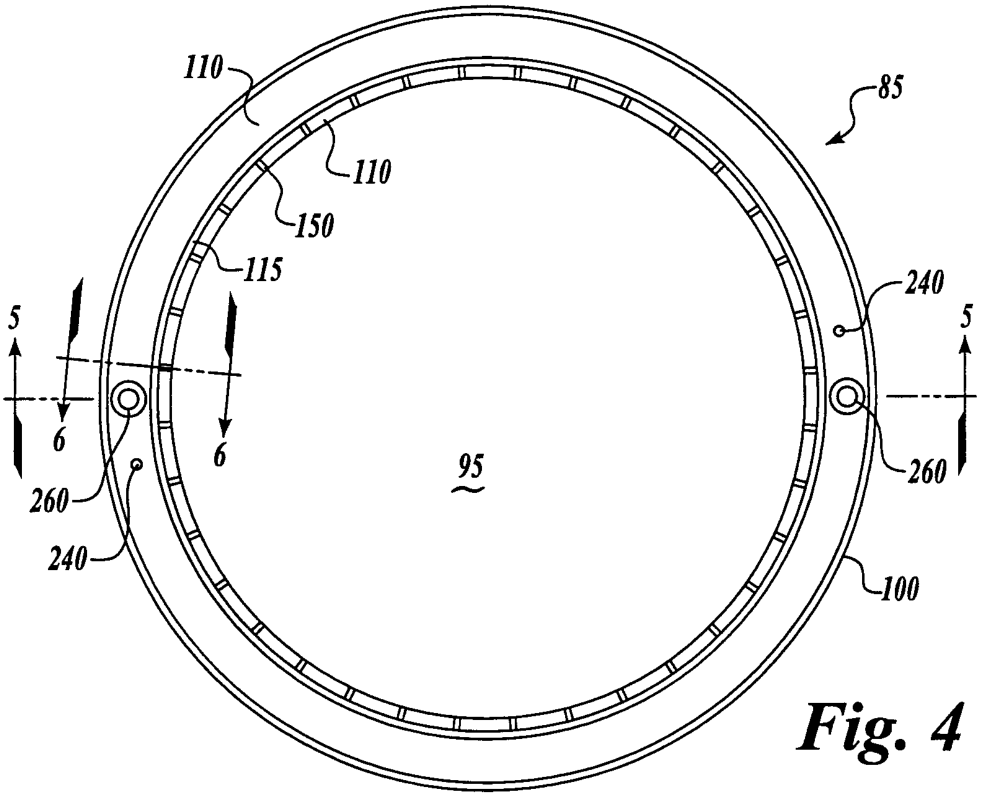
110
85
110
150
115
240
5
5
6
6
260
95
260
240
100

Fig. 4

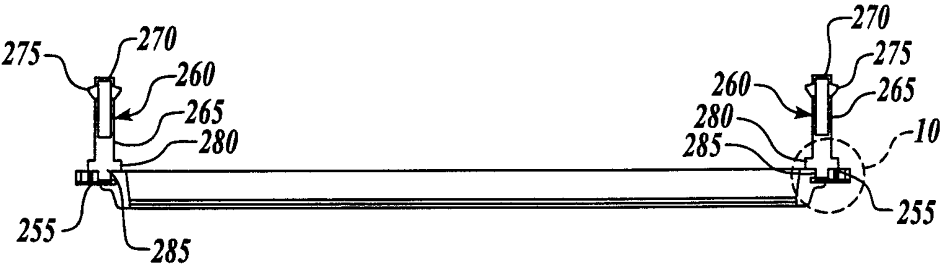
275
270
260
265
280
255
285
270
275
265
260
280
285
10
255

Fig. 5

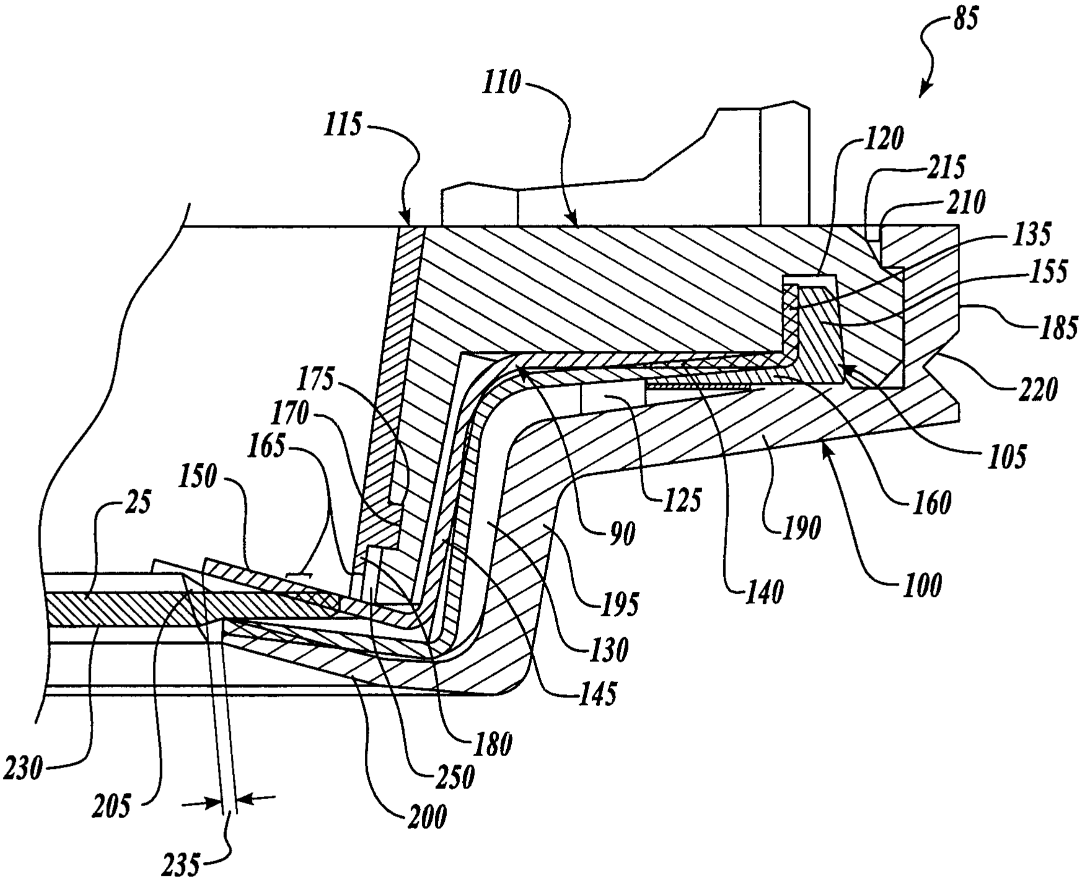
85
110
115
120
215
210
135
155
185
220
105
175
170
165
150
25
125
190
160
90
140
100
195
130
145
180
250
230
205
200
235

Fig. 6

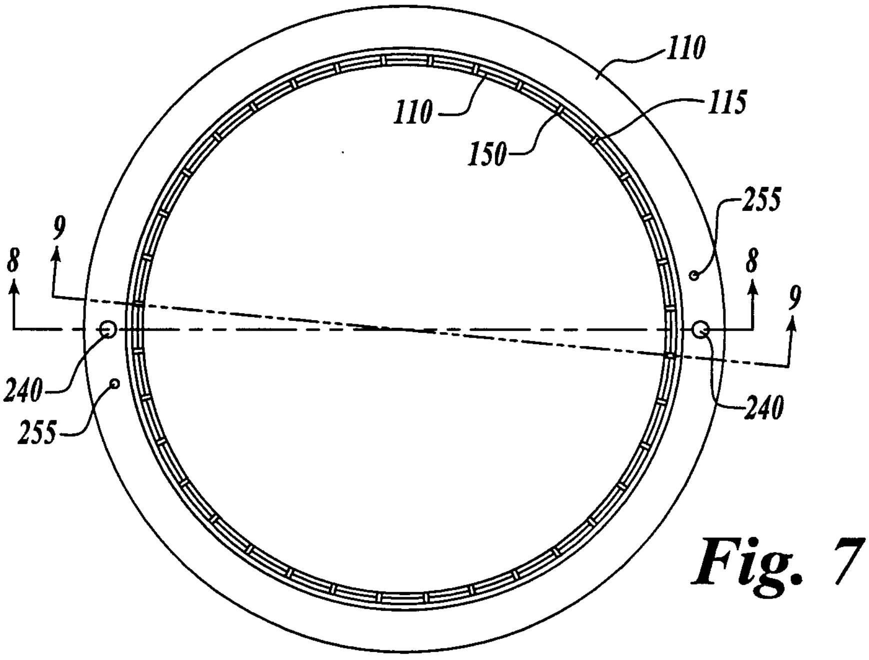

Fig. 7

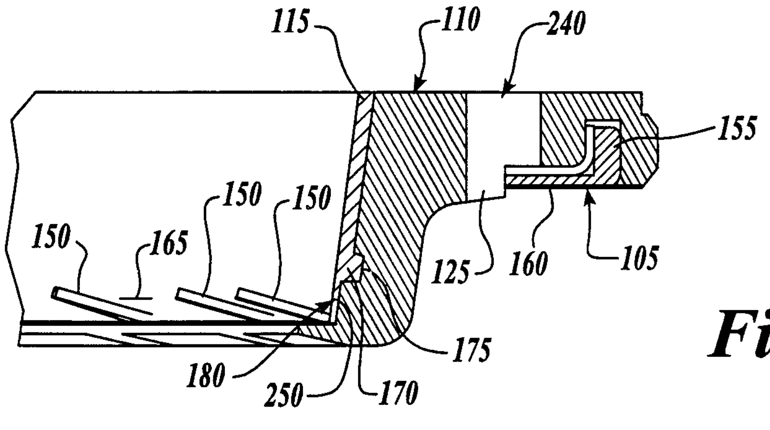

Fig. 8

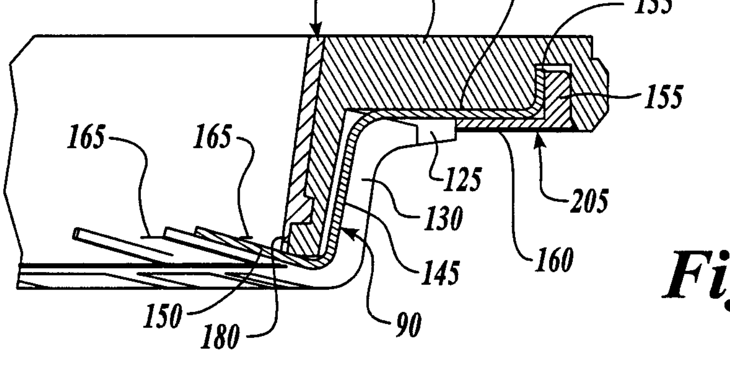

Fig. 9

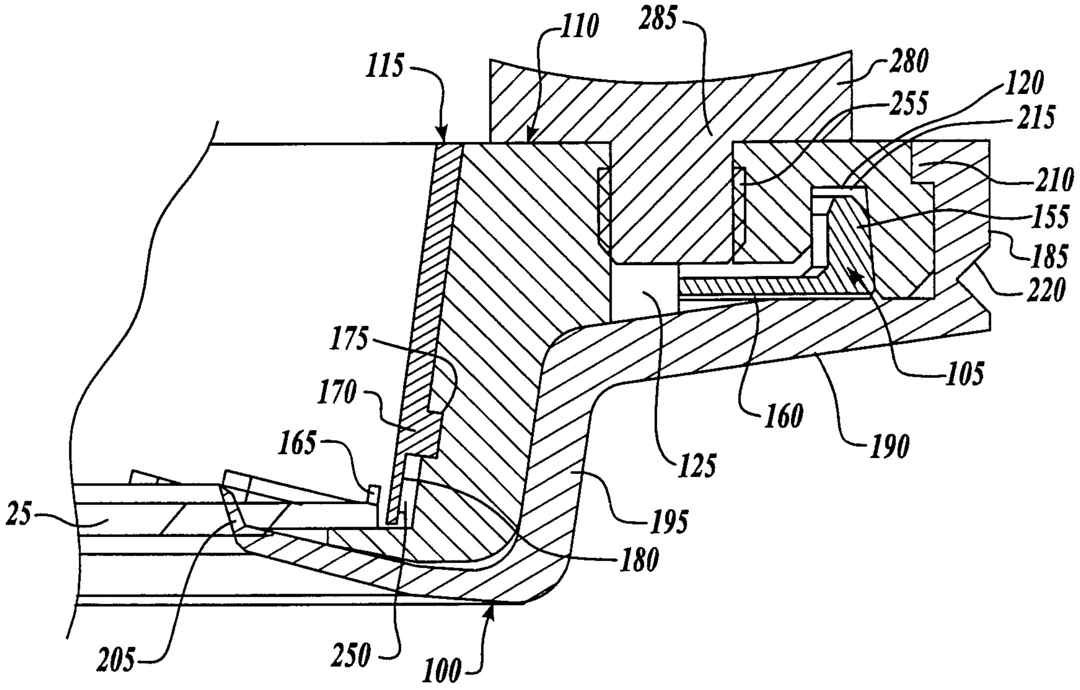
110
285
115
280
120
255
215
210
155
185
220
105
160
190
125
195
180
175
170
165
25
205
250
100

Fig. 10

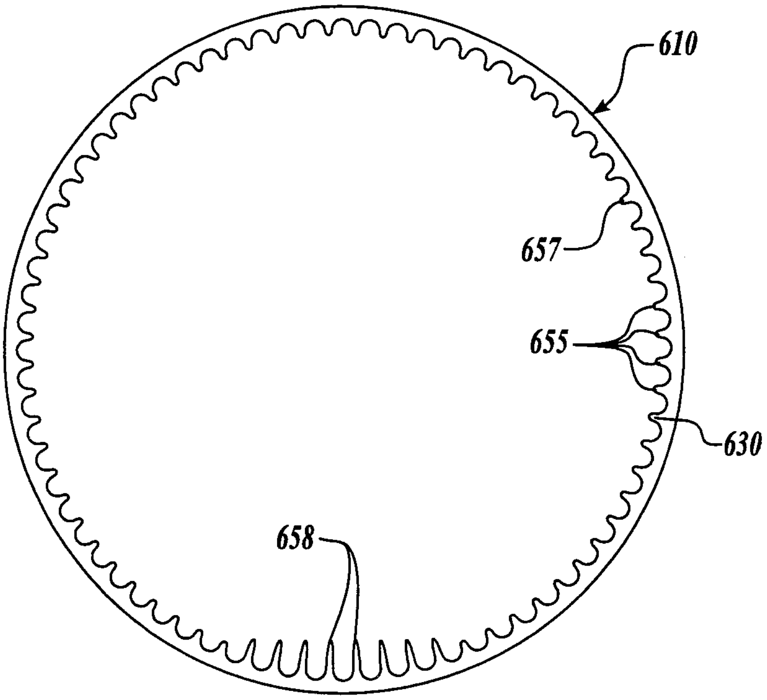

Fig. 11A

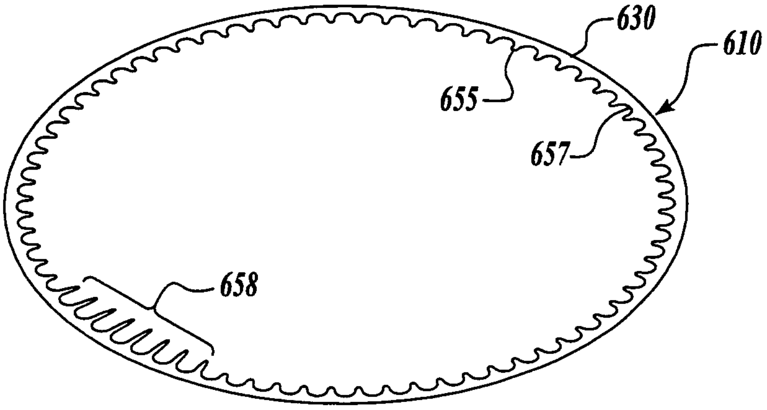

Fig. 11B

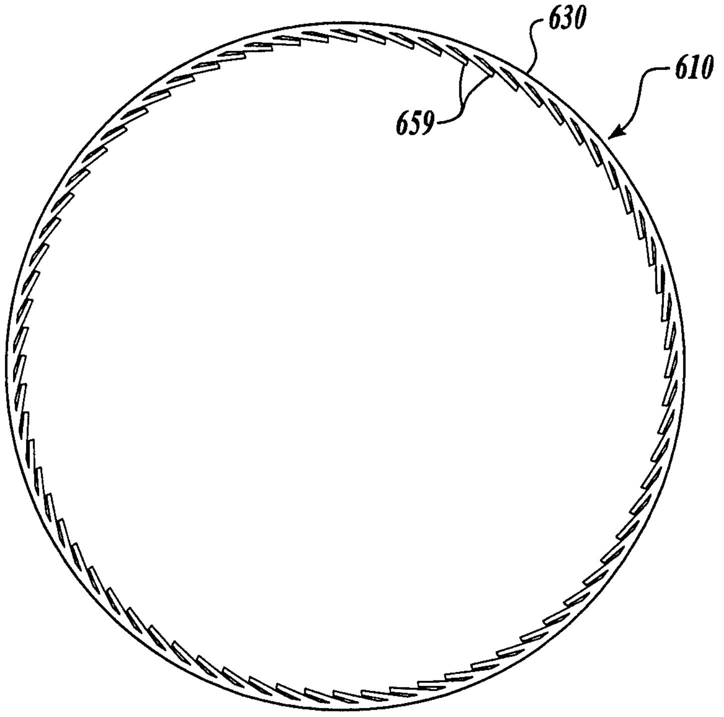
630
610
659

Fig. 12

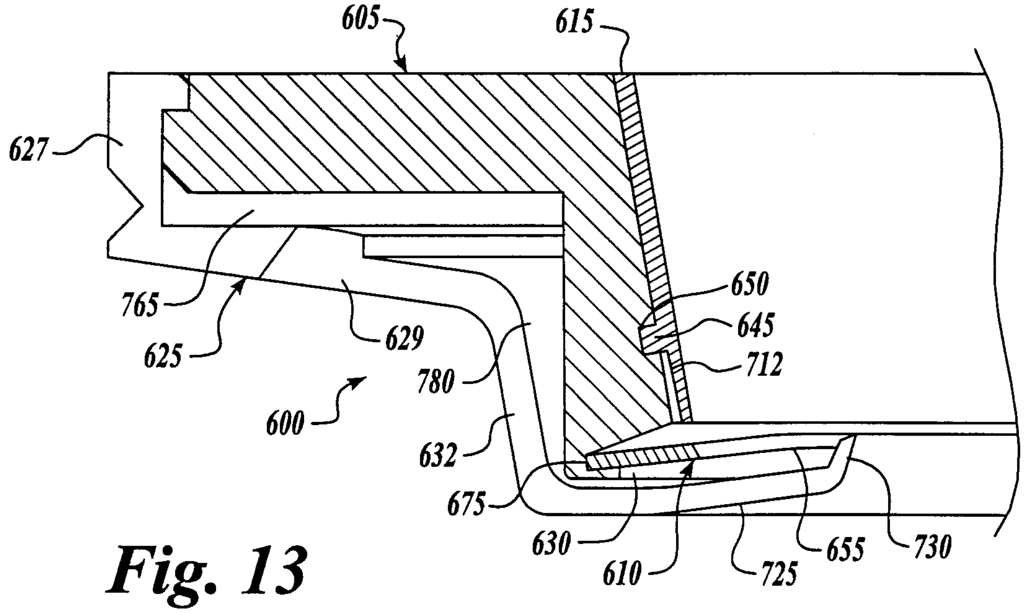
605
615
627
650
645
712
765
625
629
780
600
632
675
630
610
725
655
730

Fig. 13

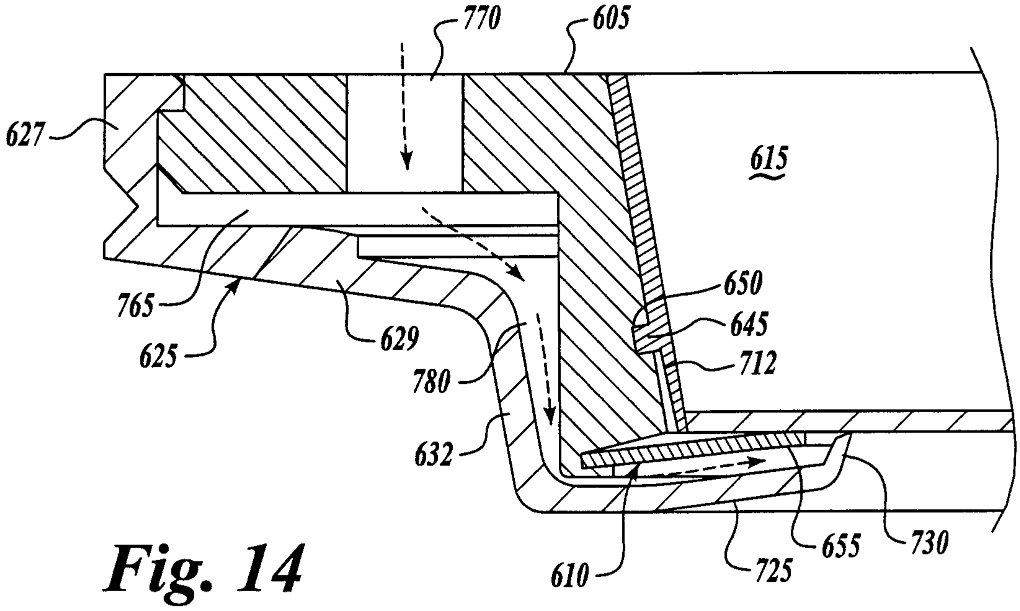
770
605
627
615
650
645
712
765
625
629
780
632
610
725
655
730

Fig. 14

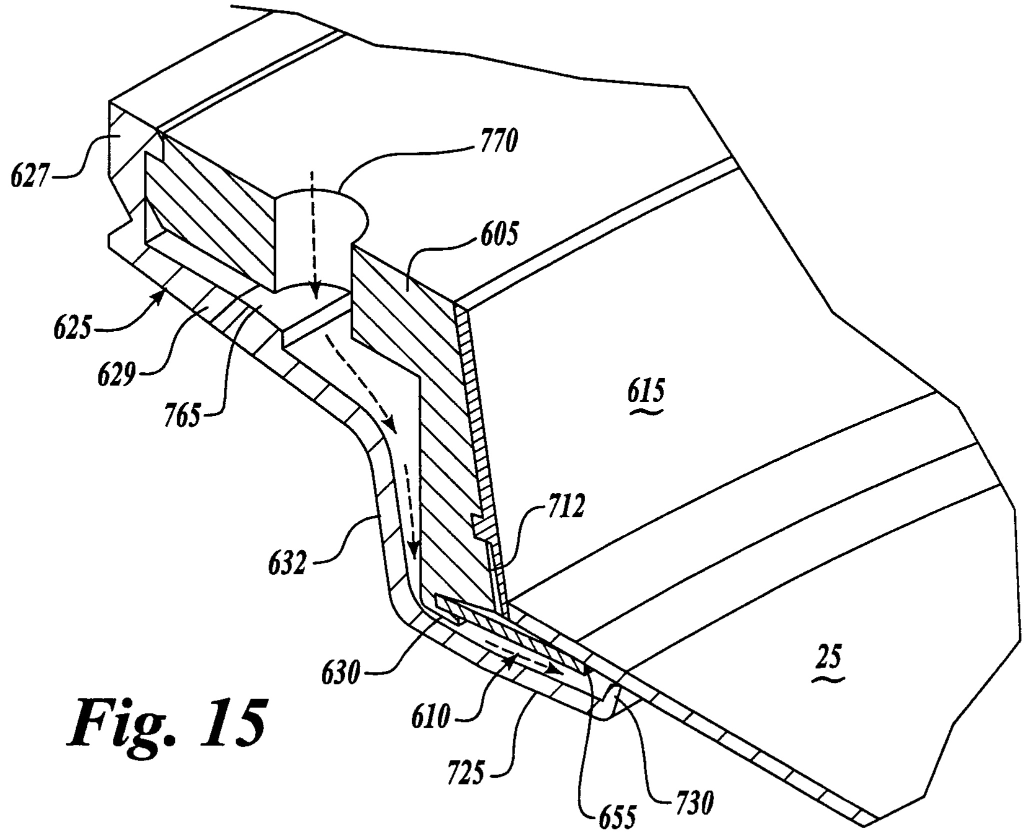
770
627
605
625
629
765
615
712
632
630
25
610
725
655
730

Fig. 15

Fig. 16

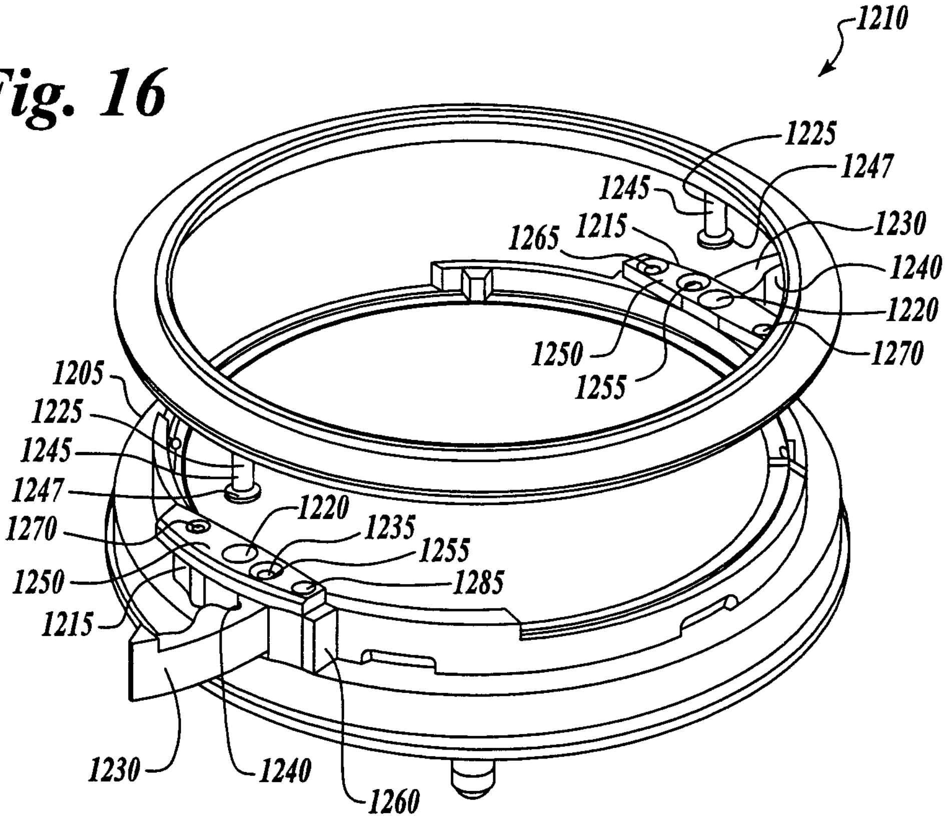
1210
1225
1247
1245
1215
1265
1230
1240
1220
1270
1250
1255
1205
1225
1245
1247
1270
1220
1235
1255
1285
1250
1215
1230
1240
1260

Fig. 17

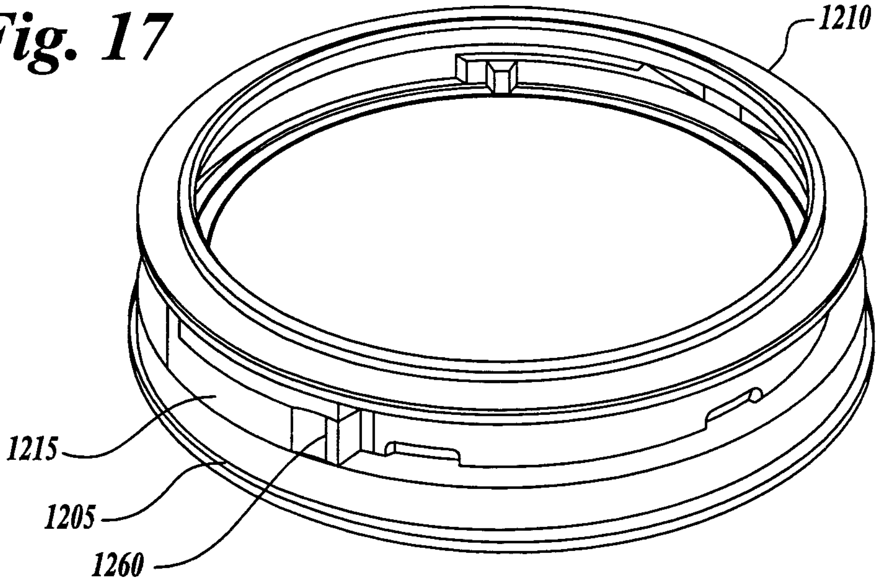
1210
1215
1205
1260

Fig. 18A

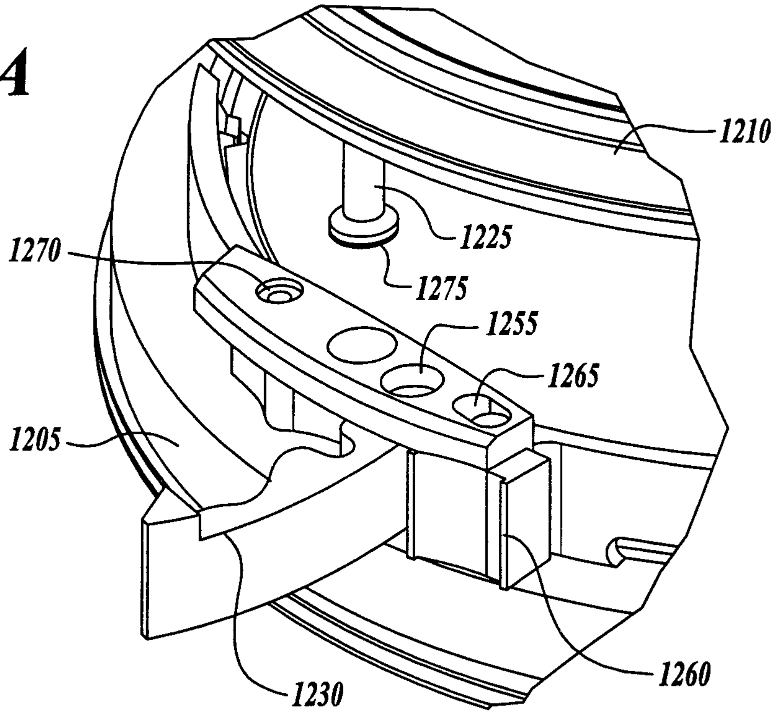

Fig. 18B

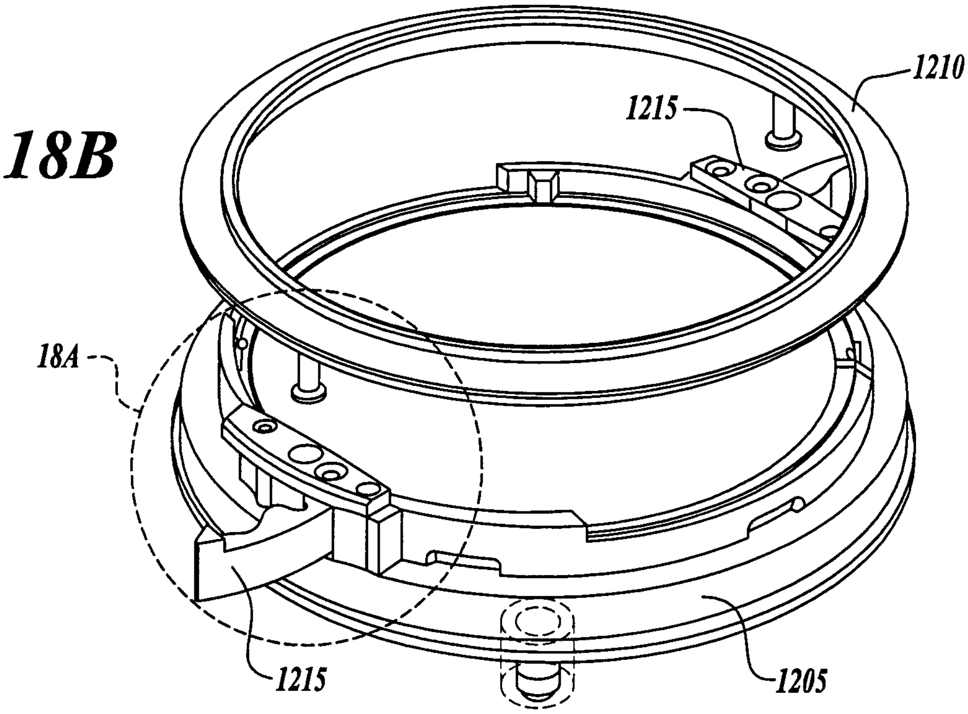

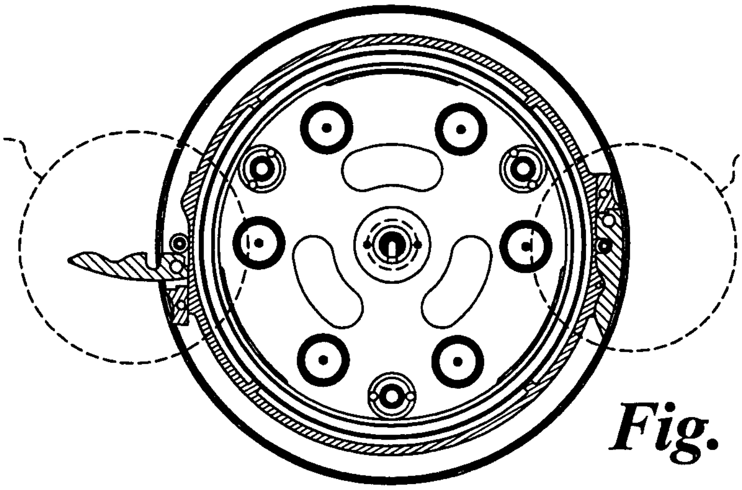

Fig. 19A

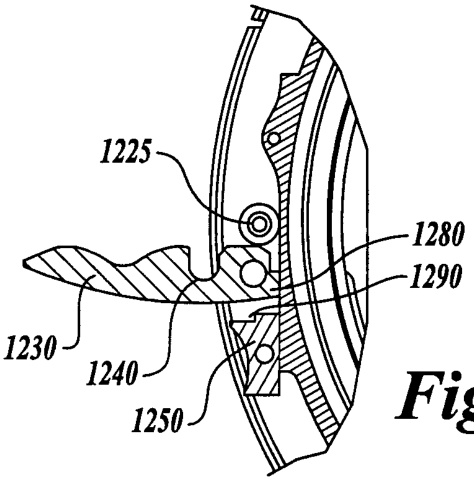

Fig. 19B

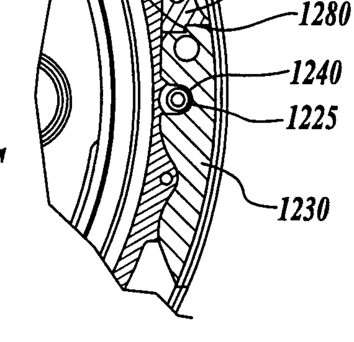

Fig. 19C

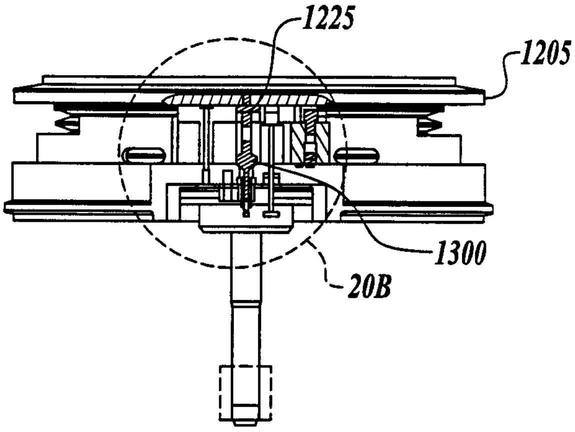

Fig. 20A

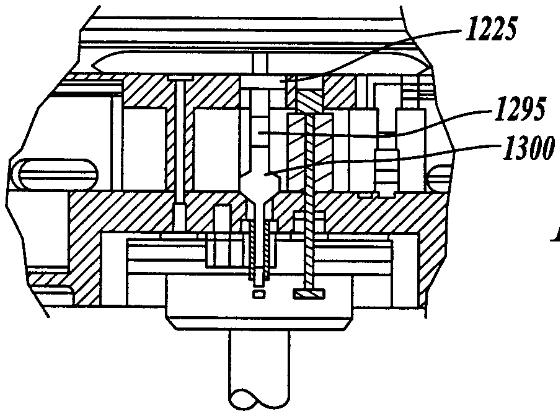

Fig. 20B

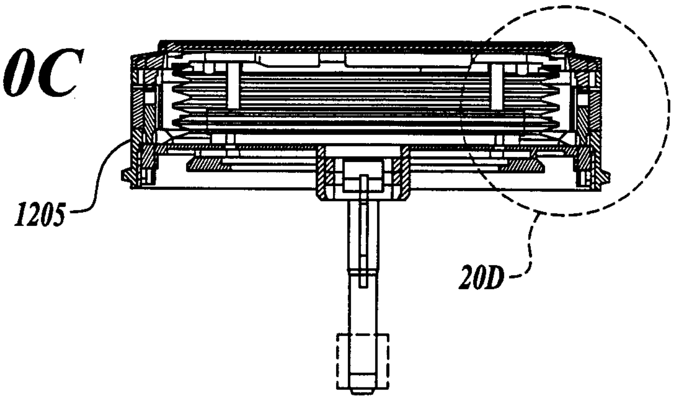

Fig. 20C

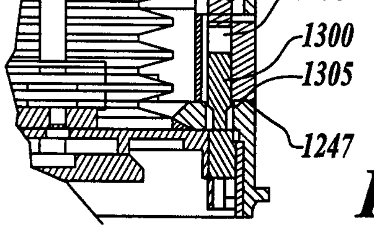

Fig. 20D

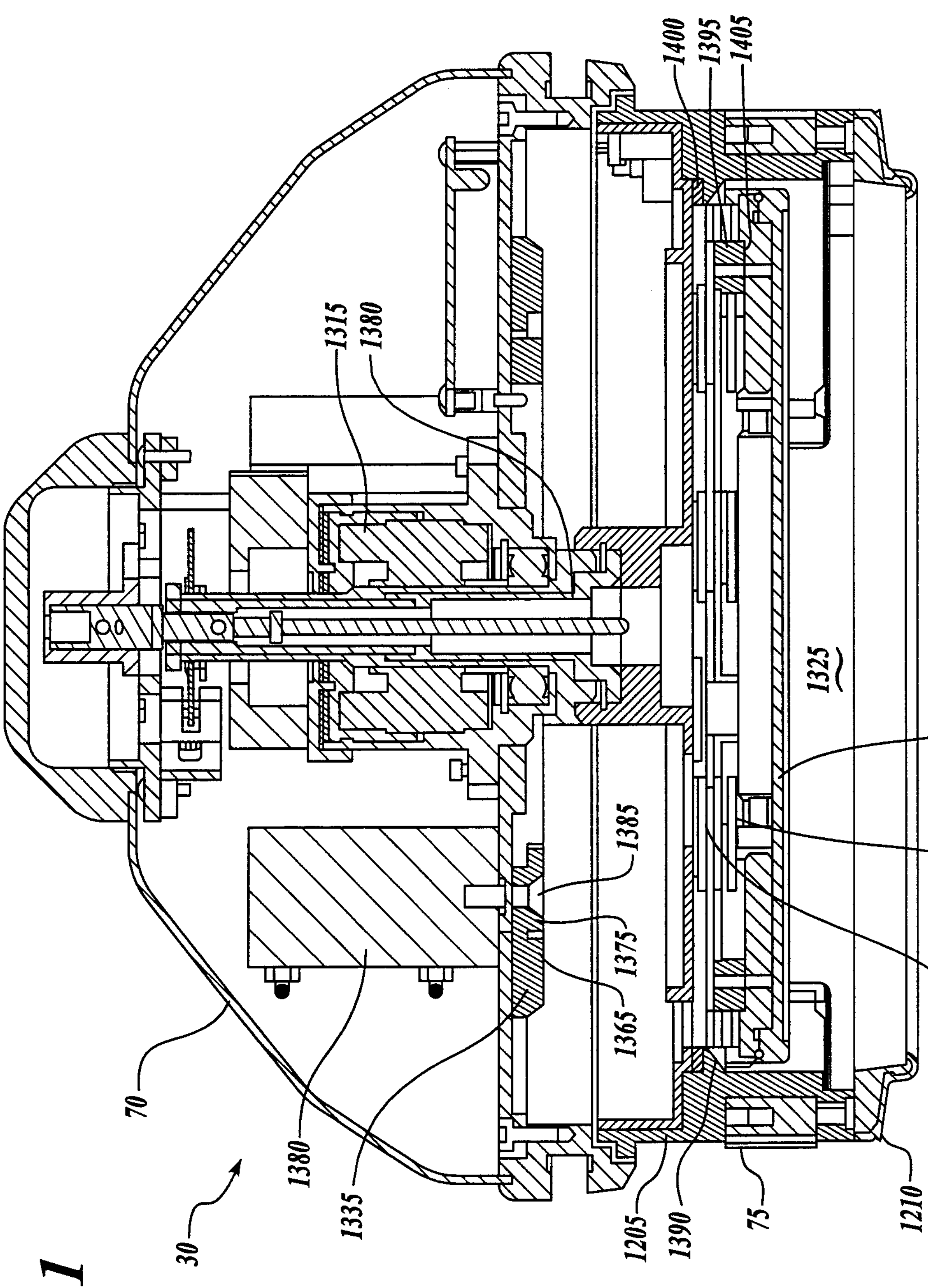
1400
1395
1405
1315
1380
1325
1310
1340
1350
1385
1375
1365
70
1380
1335
30
1205
1390
75
1210

Fig. 21

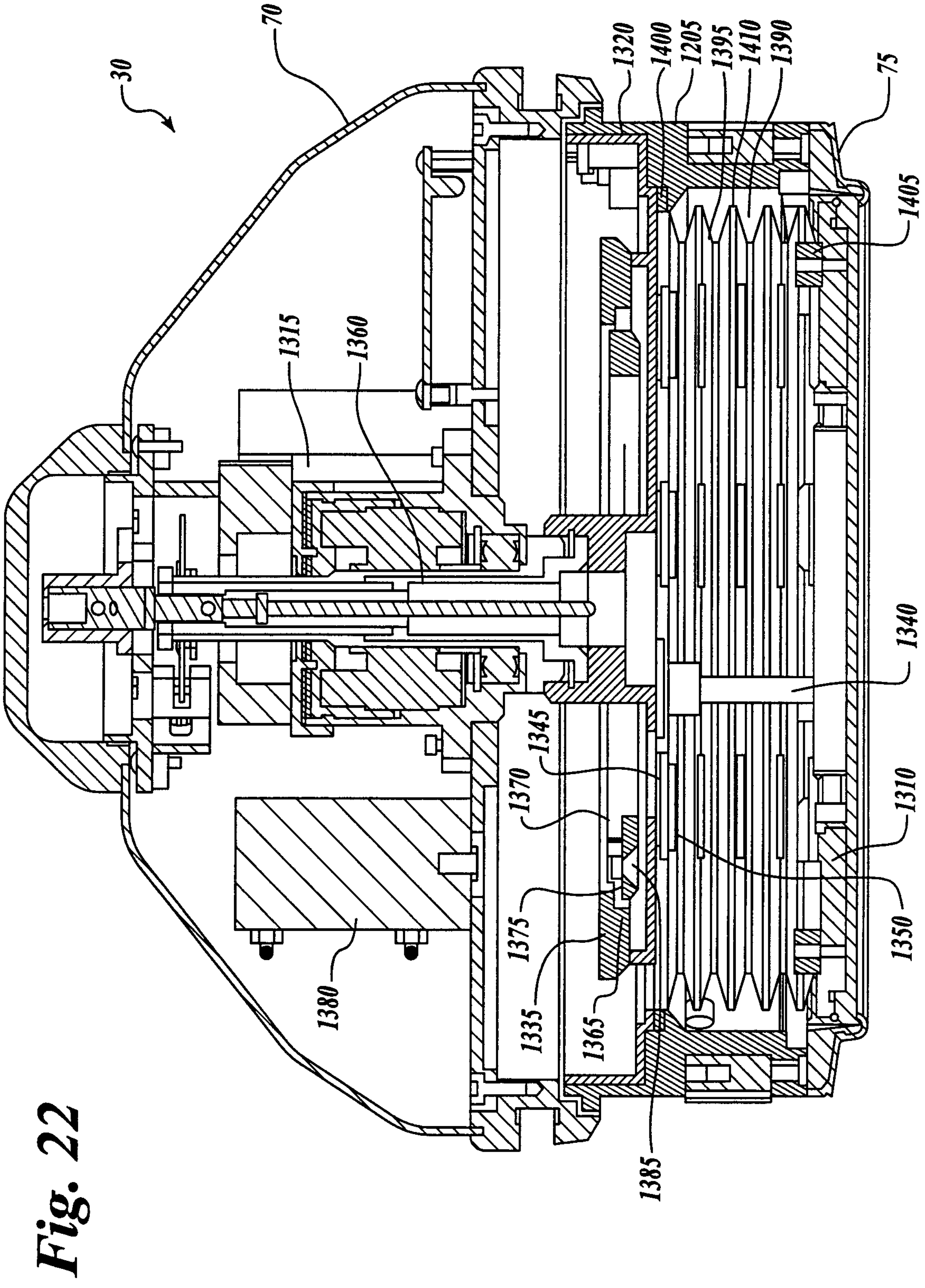
30
70
1315
1360
1320
1400
1205
1395
1410
1390
75
1405
1340
1345
1370
1375
1335
1365
1385
1380
1310
1350

Fig. 22

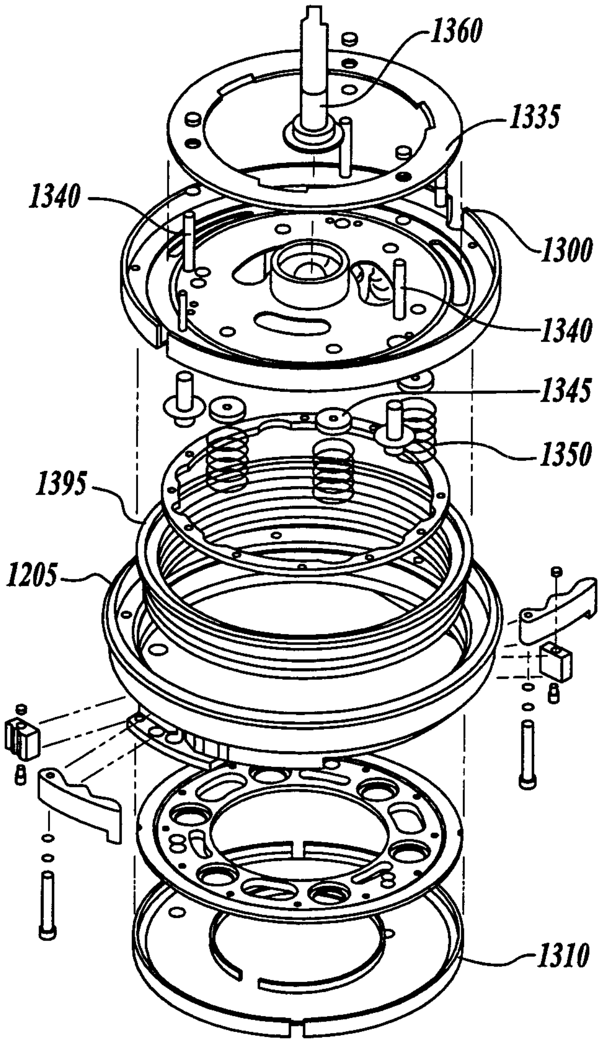

Fig. 23

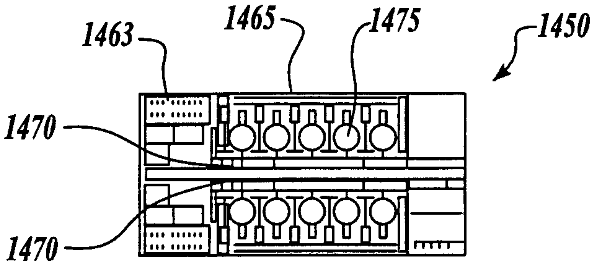

Fig. 24

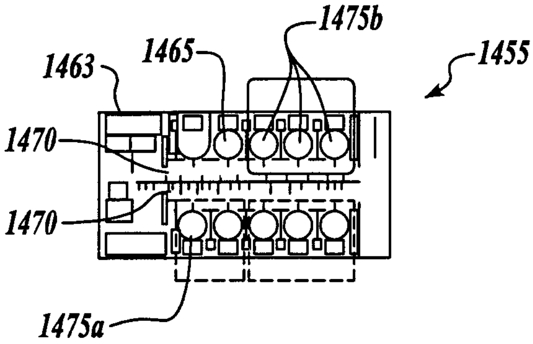

Fig. 25

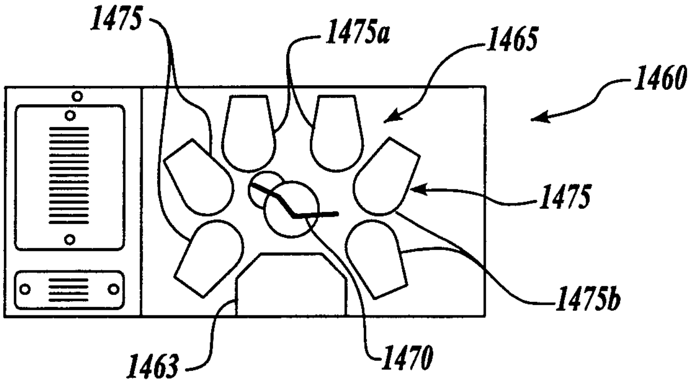

Fig. 26

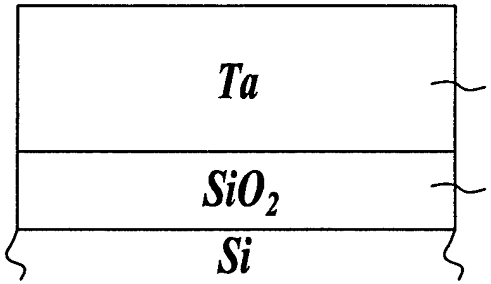

Fig. 27A

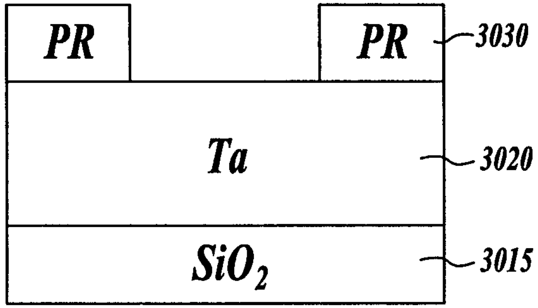

Fig. 27B

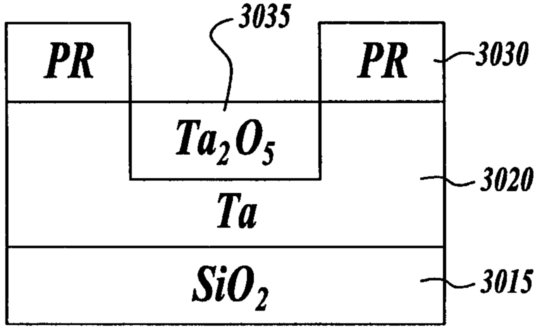

Fig. 27C

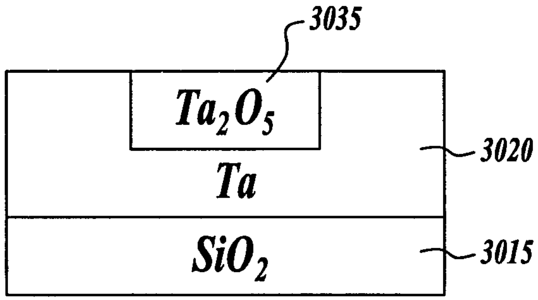

Fig. 27D

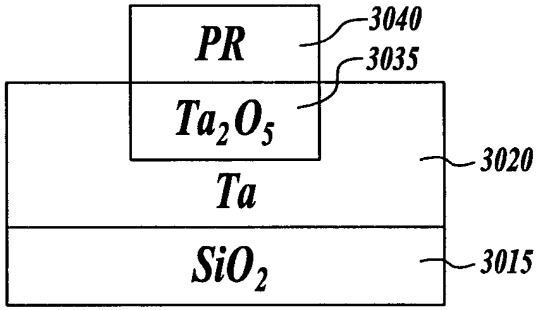

Fig. 27E

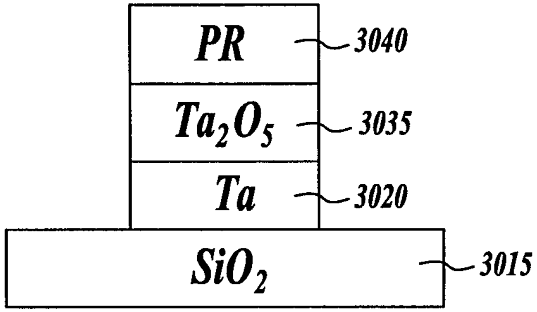

Fig. 27F

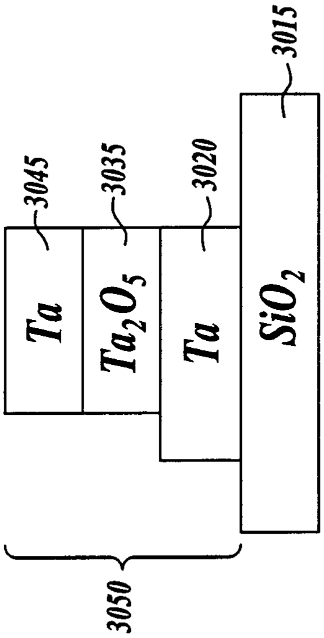

Fig. 27H

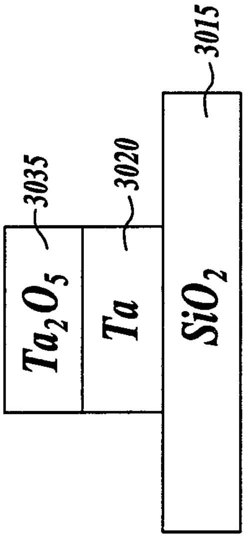

Fig. 27G

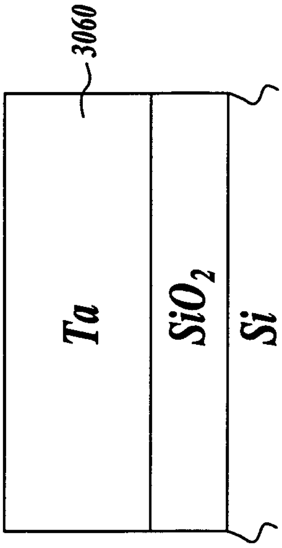

Fig. 28A

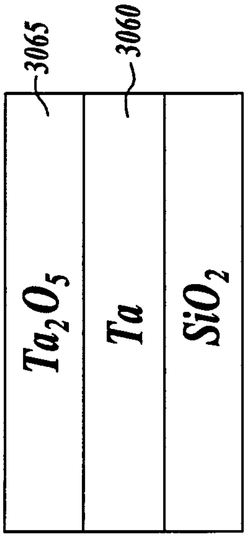

Fig. 28B

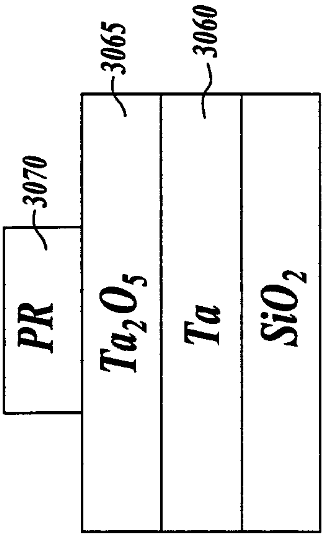

Fig. 28C

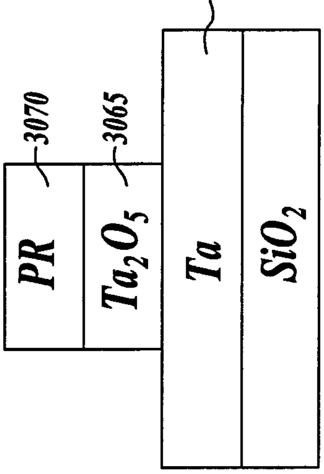

Fig. 28D

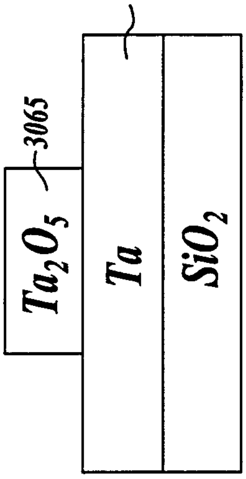

Fig. 28E

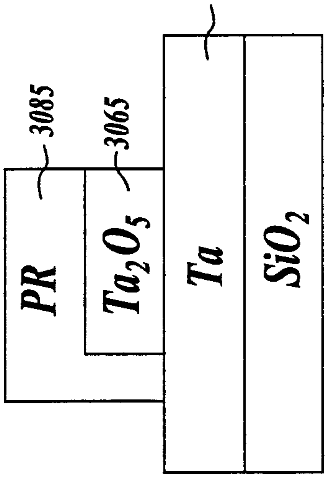

Fig. 28F

Fig. 28G

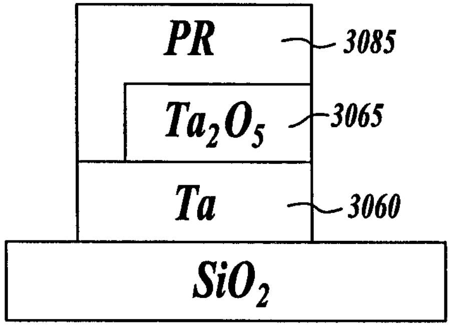

Fig. 28H

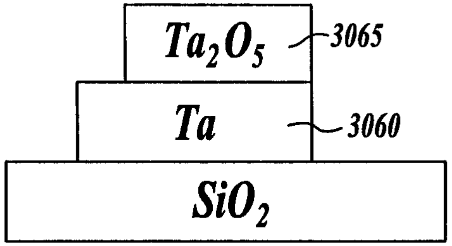

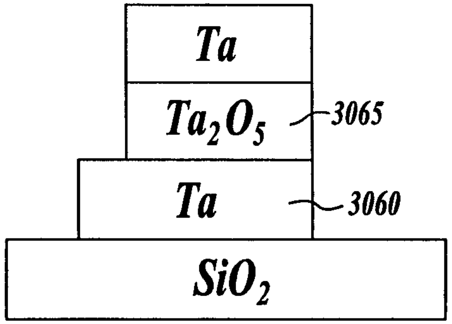

Fig. 28I

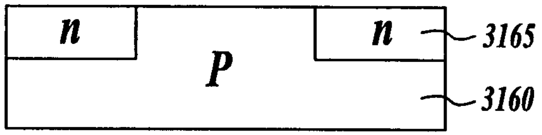

Fig. 29A

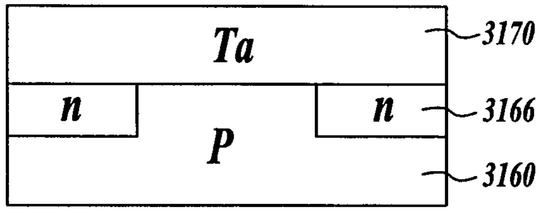

Fig. 29B

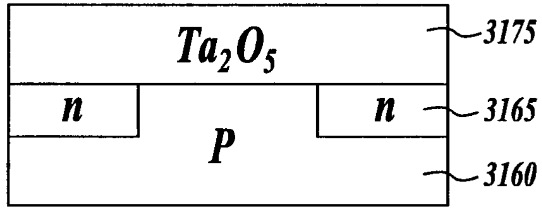

Fig. 29C

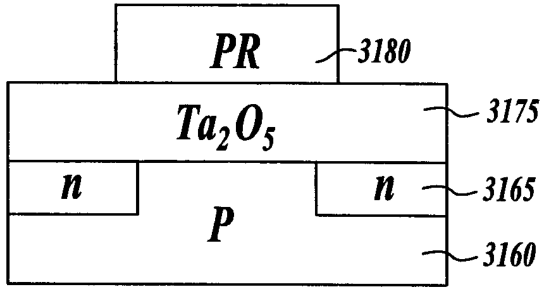

Fig. 29D

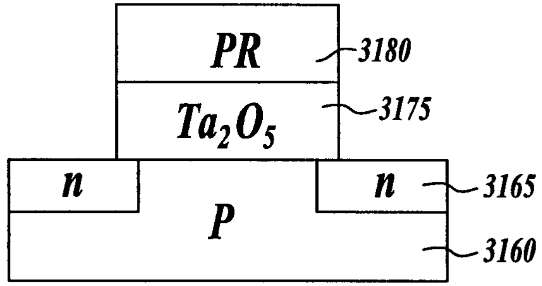

Fig. 29E

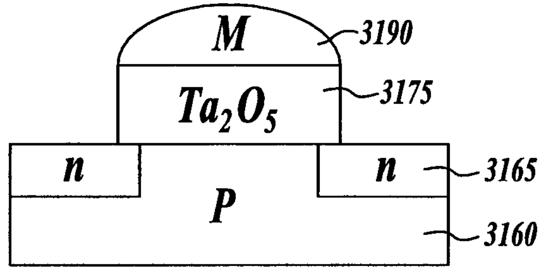

Fig. 29F