US00D855268S

(12) United States Design Patent

Desagre et al.

(10) Patent No.: US D855,268 S

(45) Date of Patent: ** Jul. 30, 2019

(54) **COMBINED GARMENT STEAMER AND SCREEN**

(71) Applicant: **CALOR**, Ecully (FR)

(72) Inventors: **Thomas Desagre**, Cluses (FR); **Frédéric Strubi**, Lyons (FR)

(73) Assignee: **CALOR**, Ecully (FR)

(**) Term: **15 Years**

(21) Appl. No.: **29/611,629**

(22) Filed: **Jul. 24, 2017**

(30) **Foreign Application Priority Data**

Jan. 24, 2017 (EM) 003702067-0004

(51) **LOC (11) Cl.** **15-05**

(52) **U.S. Cl.**
USPC **D32/17**

(58) **Field of Classification Search**
USPC D32/17, 18, 21, 71, 73, 25
CPC D06F 87/00; D06F 75/30; D06F 75/12; D06F 75/20; D06F 73/00; D06F 73/10; D06F 59/02; D06F 59/08; A47L 5/24
See application file for complete search history.

(56) **References Cited**

U.S. PATENT DOCUMENTS

4,894,935 A * 1/1990 Kretz A47G 25/0685 223/69
6,182,870 B1 * 2/2001 Seissler A47G 25/20 223/91
D451,653 S * 12/2001 Berreth D32/17
D499,517 S * 12/2004 Chen D32/17
D561,958 S * 2/2008 Hahn D32/17
D592,368 S * 5/2009 Massip D32/34
D599,511 S * 9/2009 Massip D32/17
D607,620 S * 1/2010 Massip D32/17
D623,365 S * 9/2010 Ediger D32/17
D623,366 S * 9/2010 Ediger D32/17
D652,185 S * 1/2012 Mu D32/21
D659,919 S * 5/2012 Lin D32/17
8,205,363 B2 * 6/2012 Lin D06F 75/40 38/77.6
D663,496 S * 7/2012 Ediger D32/17
D670,044 S * 10/2012 Andreesen D32/17
8,387,291 B2 * 3/2013 Compeau D06F 75/12 38/77.9
D695,473 S * 12/2013 Ediger D32/17
D697,277 S * 1/2014 Massip D32/32
D707,000 S * 6/2014 Massip D32/17
8,950,031 B1 * 2/2015 Jaramillo D06F 73/00 134/175
D770,104 S * 10/2016 Koehler D32/17
(Continued)

Primary Examiner — Ruth McInroy
(74) *Attorney, Agent, or Firm* — Loeb & Loeb LLP

(57) **CLAIM**

The ornamental design for a combined garment steamer and screen, as shown and described.

DESCRIPTION

FIG. **1** is a perspective view of a combined garment steamer and screen showing our new design;
FIG. **2** is a front elevational view thereof;
FIG. **3** is a rear elevational view thereof;
FIG. **4** is a right side elevational view thereof;
FIG. **5** is a left side elevational view thereof;
FIG. **6** is an enlarged top view thereof;
FIG. **7** is an enlarged bottom view thereof; and,
FIG. **8** is an enlarged perspective view of the base portion of the garment steamer, which is shown separately for clarity of illustration.
The broken lines appearing in the figures are for the purpose of illustrating portions of the combined garment steamer and screen that form no part of the claimed design.

1 Claim, 8 Drawing Sheets

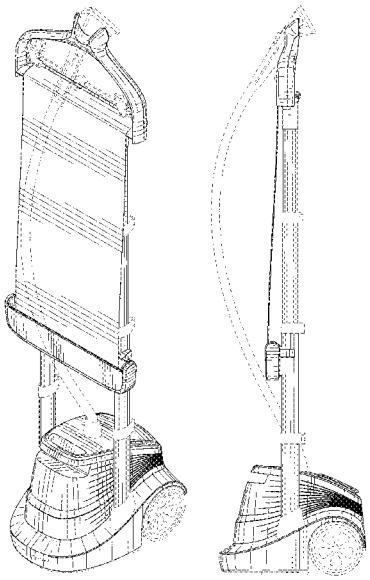

(56) **References Cited**

U.S. PATENT DOCUMENTS

9,493,905	B2 *	11/2016	Ducruet	D06F 87/00
9,562,315	B2 *	2/2017	Al-Harthi	D06F 63/00
D788,397	S *	5/2017	Tan	D32/73
D798,008	S *	9/2017	Malatray	D32/17
9,822,480	B2 *	11/2017	Fung	D06F 73/00
D825,121	S *	8/2018	Kahn	D32/21

* cited by examiner

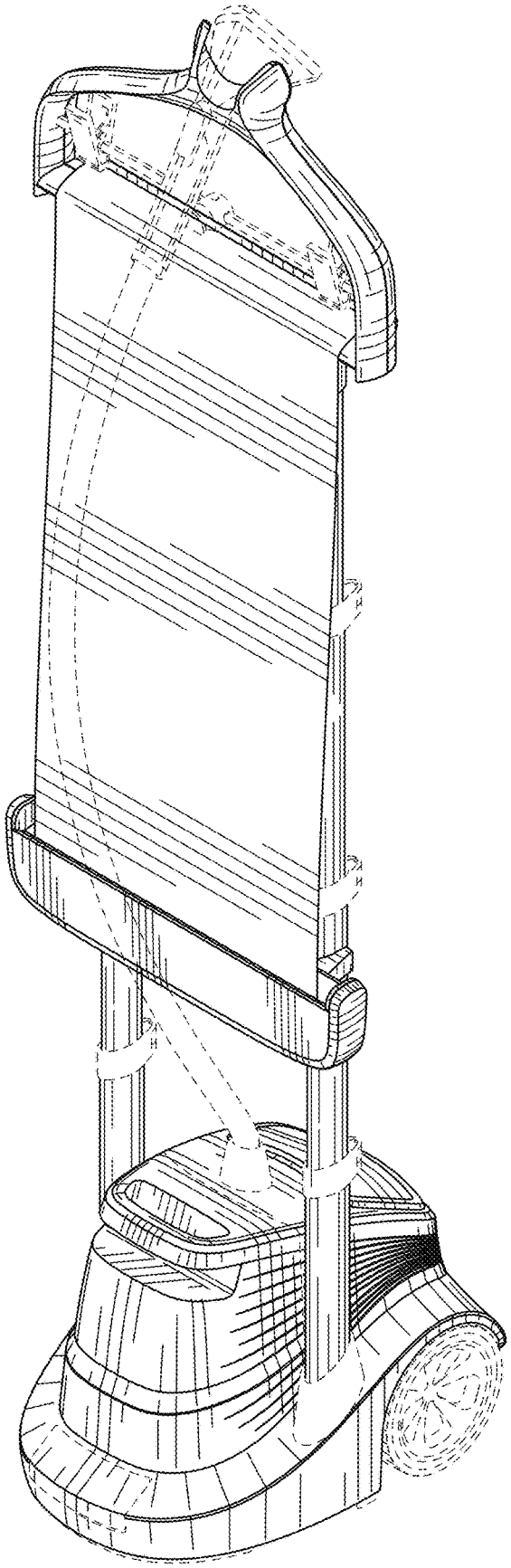

FIG. 1

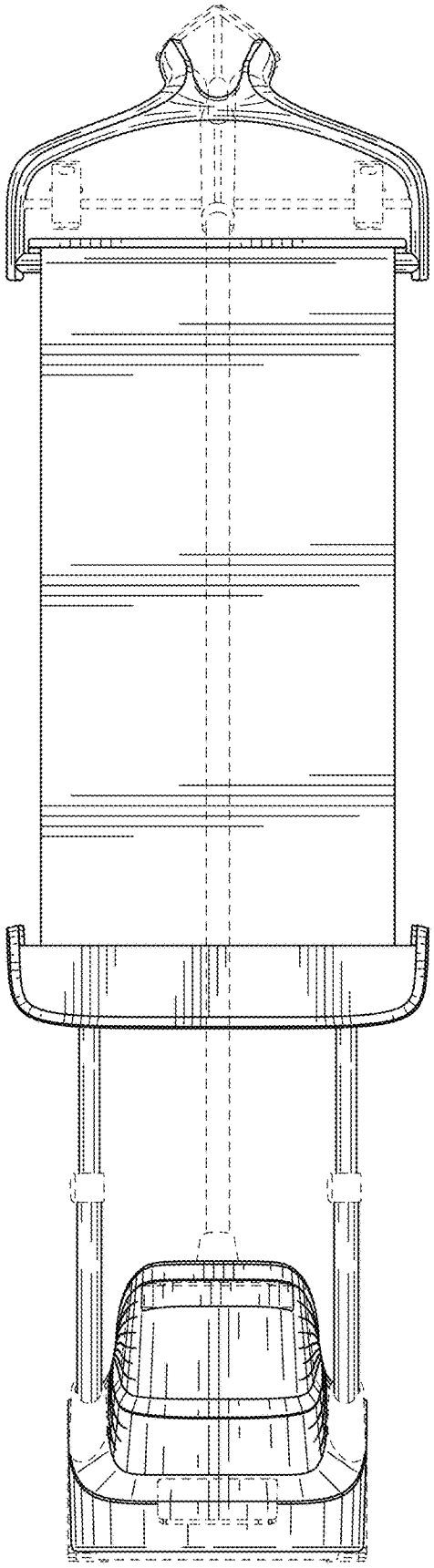

FIG. 2

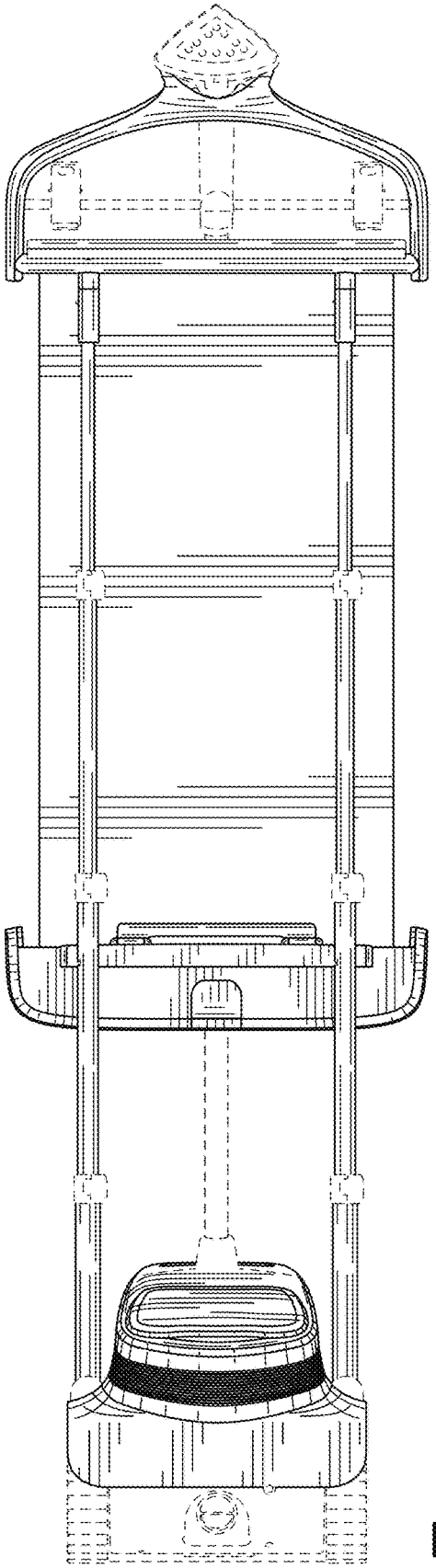

FIG. 3

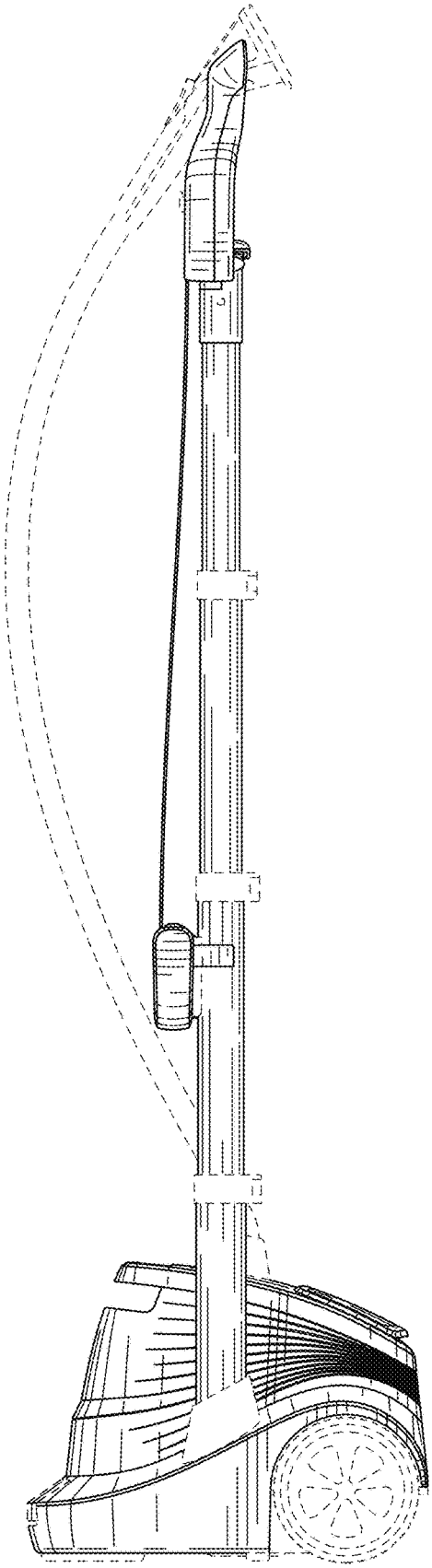

FIG. 4

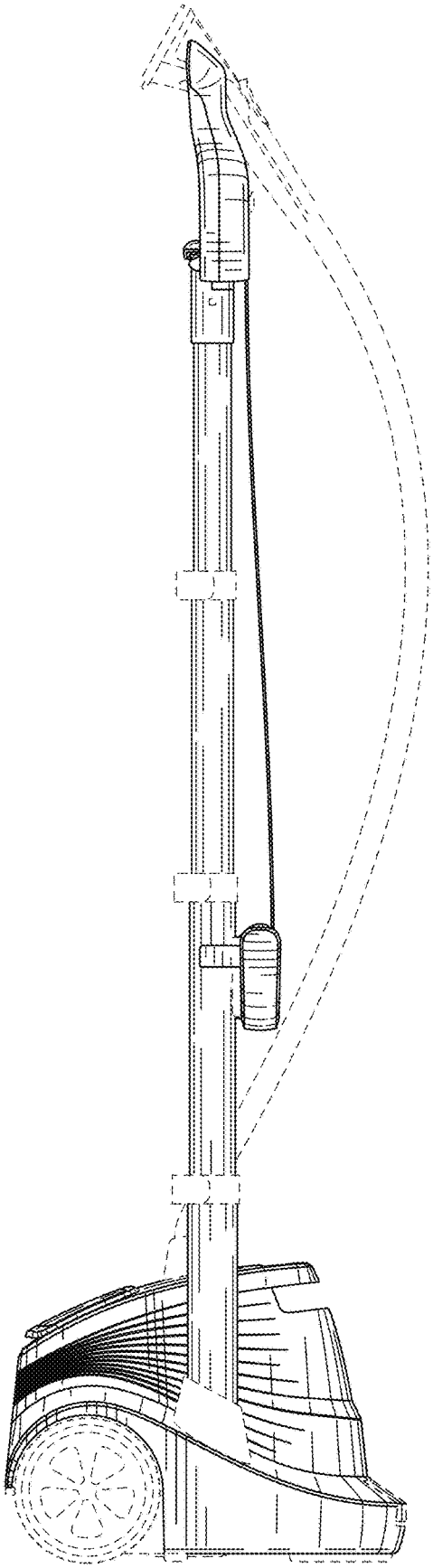

FIG. 5

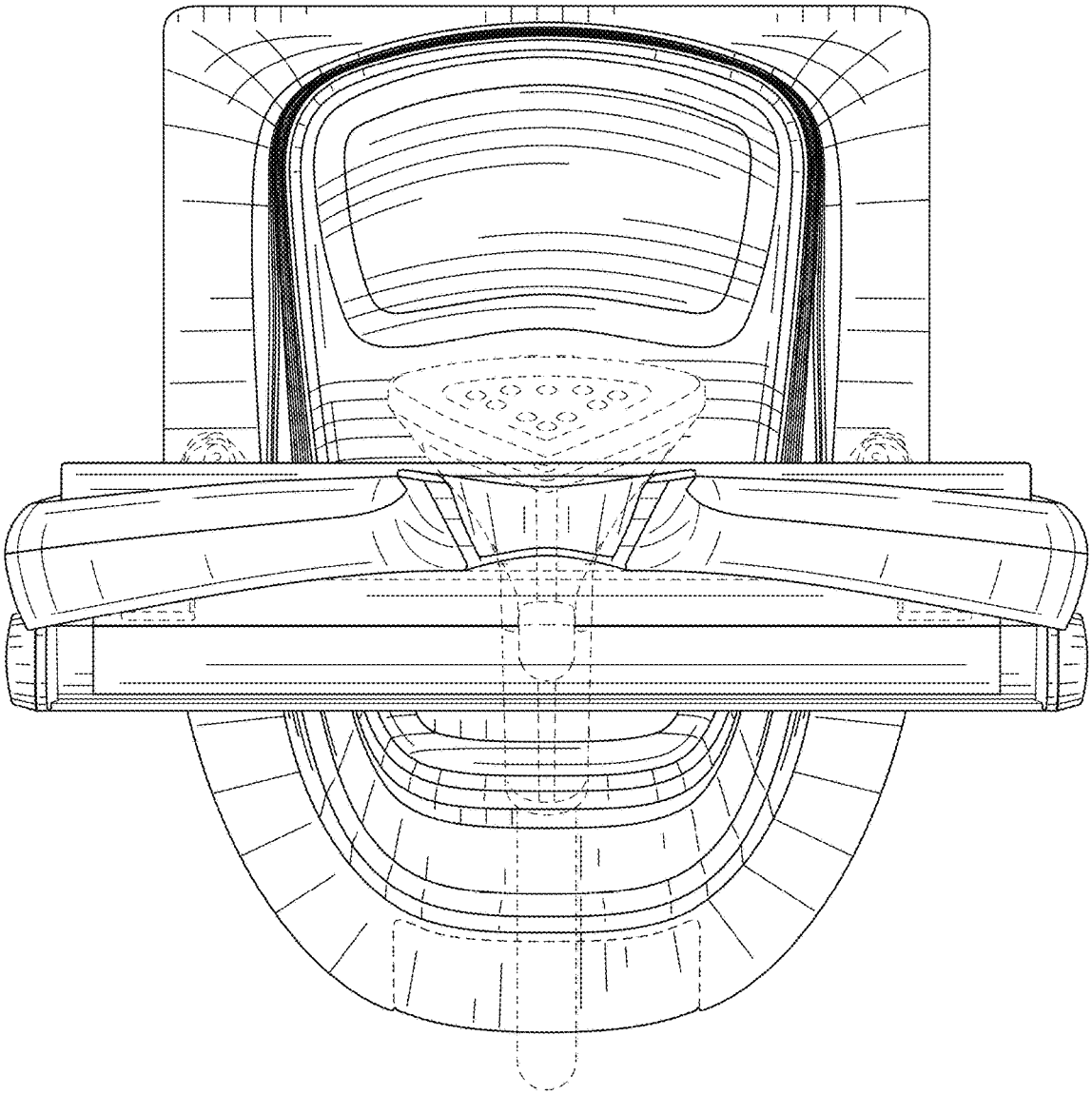

FIG. 6

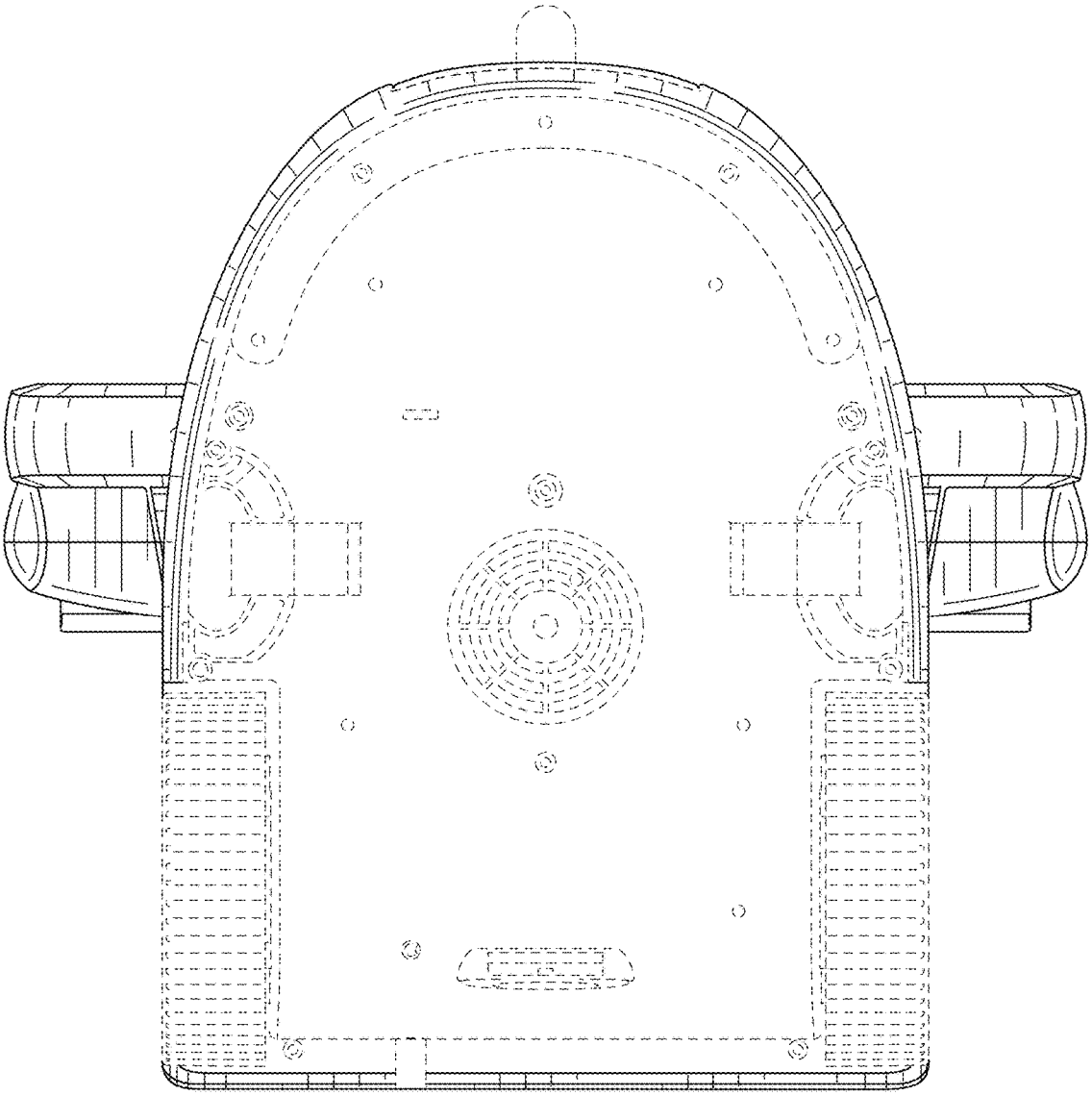

FIG. 7

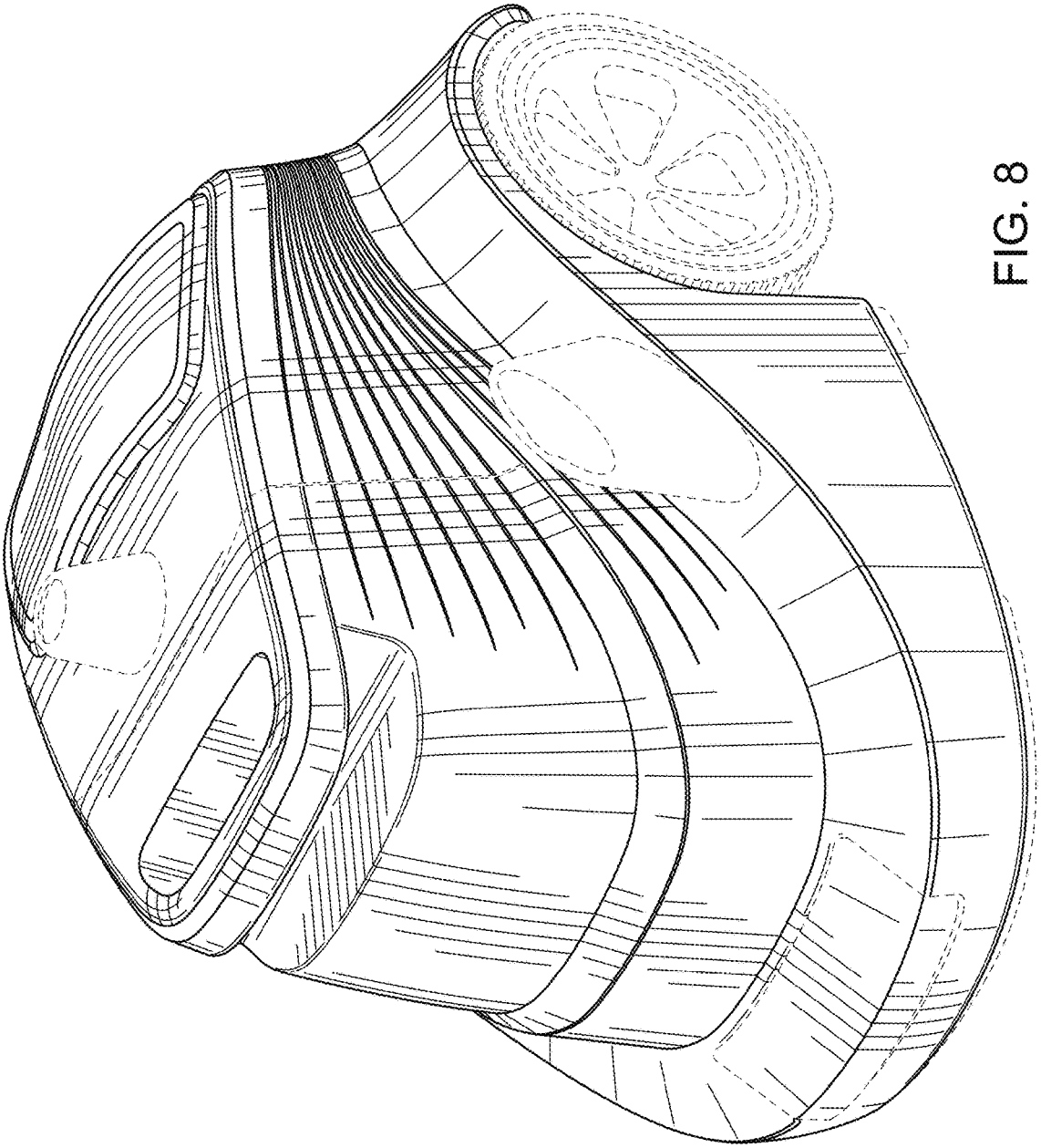

FIG. 8