W. R. FITZWILLIAM.

DEVICE FOR VIEWING MOVING PICTURES.

APPLICATION FILED APR. 8, 1916.

1,201,813. Patented Oct. 17, 1916.

T2657

Fig. 1.

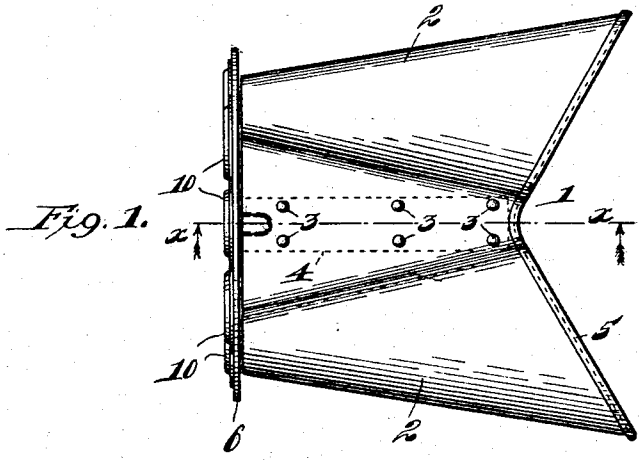

Fig. 2.

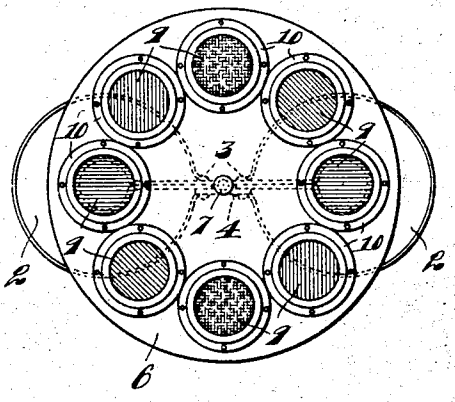

Fig. 3.

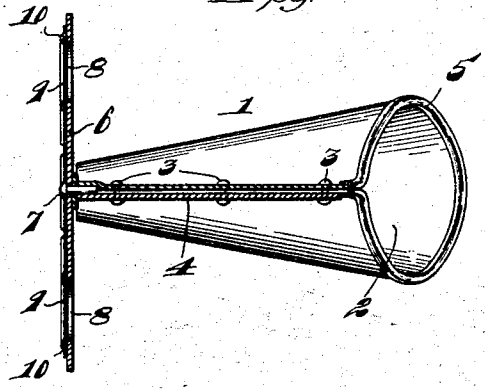

Witnesses:
H. S. Bull.
A. A. Olson

Inventor,
William R. Fitzwilliam,
by Joshua R. H. Potts
his Attorney.

THE NORRIS PETERS CO., PHOTO LITHO., WASHINGTON, D. C.

Draftsman

UNITED STATES PATENT OFFICE.

WILLIAM R. FITZWILLIAM, OF CHICAGO, ILLINOIS.

DEVICE FOR VIEWING MOVING PICTURES.

1,201,813. Specification of Letters Patent. Patented Oct. 17, 1916.

Application filed April 8, 1916. Serial No. 89,846.

To all whom it may concern:

Be it known that I, WILLIAM R. FITZWILLIAM, a citizen of the United States, and a resident of the city of Chicago, county of Cook and State of Illinois, have invented a certain new and useful Device for Viewing Moving Pictures, of which the following is a specification.

My invention relates to a new and useful device or glass for viewing moving pictures, the object of the invention being the production of a device through which moving pictures may be viewed and whereby the same will be rendered more realistic by reason of appropriate coloring or tinting which will be supplied through employment of the device.

A further object is the production of a motion picture viewing instrument which will be of extremely simple construction and efficient in use.

Other objects will appear hereinafter.

With these objects in view, the invention consists in the combinations and arrangements of parts hereinafter described and claimed.

The invention will be best understood by reference to the accompanying drawing forming a part of this specification, and in which,

Figure 1 is a top plan view of a moving picture viewing device embodying the invention, Fig. 2 is a front view of the same, and Fig. 3 is a section taken on line *x*—*x* of Fig. 1.

The preferred form of construction, as illustrated in the drawing, comprises a body 1 formed of a single piece of sheet metal which is bent upon itself to form forwardly tapering sighting openings or tubes 2. The ends of the piece of sheet metal from which the body 1 is formed are brought together at the under side of the device and rigidly secured together by means of rivets 3, a strip 4 being arranged over the joint formed for reinforcement. The rearward ends of the sighting tubes 2 are formed to conform with the contour of the face around the eyes in order to exclude any light, and an edging or covering 5 of felt or other suitable material is provided to alleviate friction and to insure a tight connection when the device is in use.

Arranged at the front end of the device is a circular holder 6 which is rotatably mounted upon a headed pin 7 secured at its rearward end in the body 1, as clearly shown in Fig. 3. The connection is such as to permit of free rotary adjustment of the holder 6 but at the same time sufficient friction is secured to yieldingly hold the holder in any position to which the same may be rotated in the use of the device.

Formed in the holder 6 is a plurality of spaced openings 8 which are so arranged that two of said openings will register with the sighting tubes 2 simultaneously. Arranged over the openings 8 are transparencies 9 of glass or other suitable material which are secured in position by means of circular flanges 10. The transparencies 9 are arranged in pairs so that openings which register simultaneously with the sighting tubes 2 will be provided with transparencies of the same color. With this arrangement, it will be seen, that by simply rotatably adjusting the holder 6 transparencies of red, green, yellow or blue color, as the case may be, or any other color which it may be desired to employ, may be brought into registration with the sighting tubes 2. The frictional engagement between the holder and the pin 7 serves to frictionally hold the former in positions of adjustment, as before mentioned.

Through the employment of a device of the construction set forth, it will be seen that moving pictures may be rendered more realistic through coloring or tinting of the same as results from viewing the pictures through the device. For instance, in viewing the pictures showing a fire or the like, the holder 6 may be adjusted to bring the red transparencies into registration with the sighting tubes, in which event the motion pictures will be appropriately colored and thus rendered more realistic to the user of the device. Similarly in viewing a country scene in the summer time, the pictures may be tinted green by simply adjusting the holder of the device to bring the green transparencies into registration with the sighting tubes 2. The same will be true with almost every picture which may be shown, the holder 6, in each case, being adjusted so as to appropriately tint or color the pictures so far as the user of the device is concerned. The construction is such, also, that the coloring effect may be changed instantly or as often as desired, or any color may be retained indefinitely. The coloring of the pictures has been found to be restful

to the eyes in that it takes away the glare and reduces the flickering. The viewing of moving pictures will thus be rendered more enjoyable and interesting.

The formation of the rearward end of the device to tightly fit around the eyes, as before described, serves to shut out any side light which otherwise interferes with perfect vision, permitting only the light rays from the picture to meet the eye; thus making not only a brilliant picture, but bringing out those details which the camera has recorded, but which otherwise are lost to the eye.

While I have illustrated and described the preferred form of construction for carrying my invention into effect, this is capable of variation and modification without departing from the spirit of the invention. I, therefore, do not wish to be limited to the precise details of construction set forth, but desire to avail myself of such variations and modifications as come within the scope of the appended claims.

Having described my invention what I claim as new and desire to secure by Letters Patent is:

1. A device of the class described comprising a pair of sighting tubes; and a plurality of variously colored transparencies adapted for successive registration with said sighting tubes, substantially as described.

2. A device of the class described comprising a pair of sighting tubes; and a plurality of variously colored transparencies adapted for successive registration with said sighting tubes, said transparencies being arranged in pairs adapted for simultaneous registration with said tubes, substantially as described.

3. A device of the class described comprising a pair of sighting tubes; a member rotatably connected with said tubes and disposed in a plane substantially perpendicular to the axes of said tubes, said member having a plurality of openings arranged in pairs, each pair being adapted for simultaneous registration with said sighting tubes; and distinctive transparencies arranged over each pair of said openings, substantially as described.

4. A device of the class described comprising a pair of sighting tubes; a member rotatably connected with said tubes and disposed in a plane substantially perpendicular to the axes of said tubes, said member having a plurality of openings arranged in pairs, each pair being adapted for simultaneous registration with said sighting tubes; and colored transparencies arranged over said openings, the transparencies arranged over each pair of openings being of the same coloration, substantially as described.

5. A device of the class described comprising a pair of sighting tubes; a member rotatably connected with said tubes and disposed in a plane substantially perpendicular to the axes of said tubes, said member having a plurality of openings arranged in pairs, each pair being adapted for simultaneous registration with said sighting tubes; distinctive transparencies arranged over each pair of said openings; and means for yieldingly holding said holder in positions of rotary adjustment, substantially as described.

6. A device of the class described comprising a pair of forwardly tapering sighting tubes; and a rotatably mounted member having a plurality of variously colored transparencies adapted for successive registration with said sighting tubes, substantially as described.

7. A device of the class described comprising a pair of sighting tubes; a circular holder arranged at the front ends of said tubes and rotatably connected therewith, said holder being disposed in a plane substantially perpendicular to the axes of said tubes and said member having a plurality of openings arranged in pairs, each pair being adapted for simultaneous registration with said sighting tubes; and distinctive transparencies arranged over each pair of said openings, substantially as described.

In testimony whereof I have signed my name to this specification in the presence of two subscribing witnesses.

WILLIAM R. FITZWILLIAM.

Witnesses:
JOSHUA R. H. POTTS,
HELEN F. LILLIS.

Copies of this patent may be obtained for five cents each, by addressing the "Commissioner of Patents, Washington, D. C."