March 15, 1938. C. S. GABRIELSEN 2,110,991

EXHAUSTING APPARATUS

Filed June 6, 1936

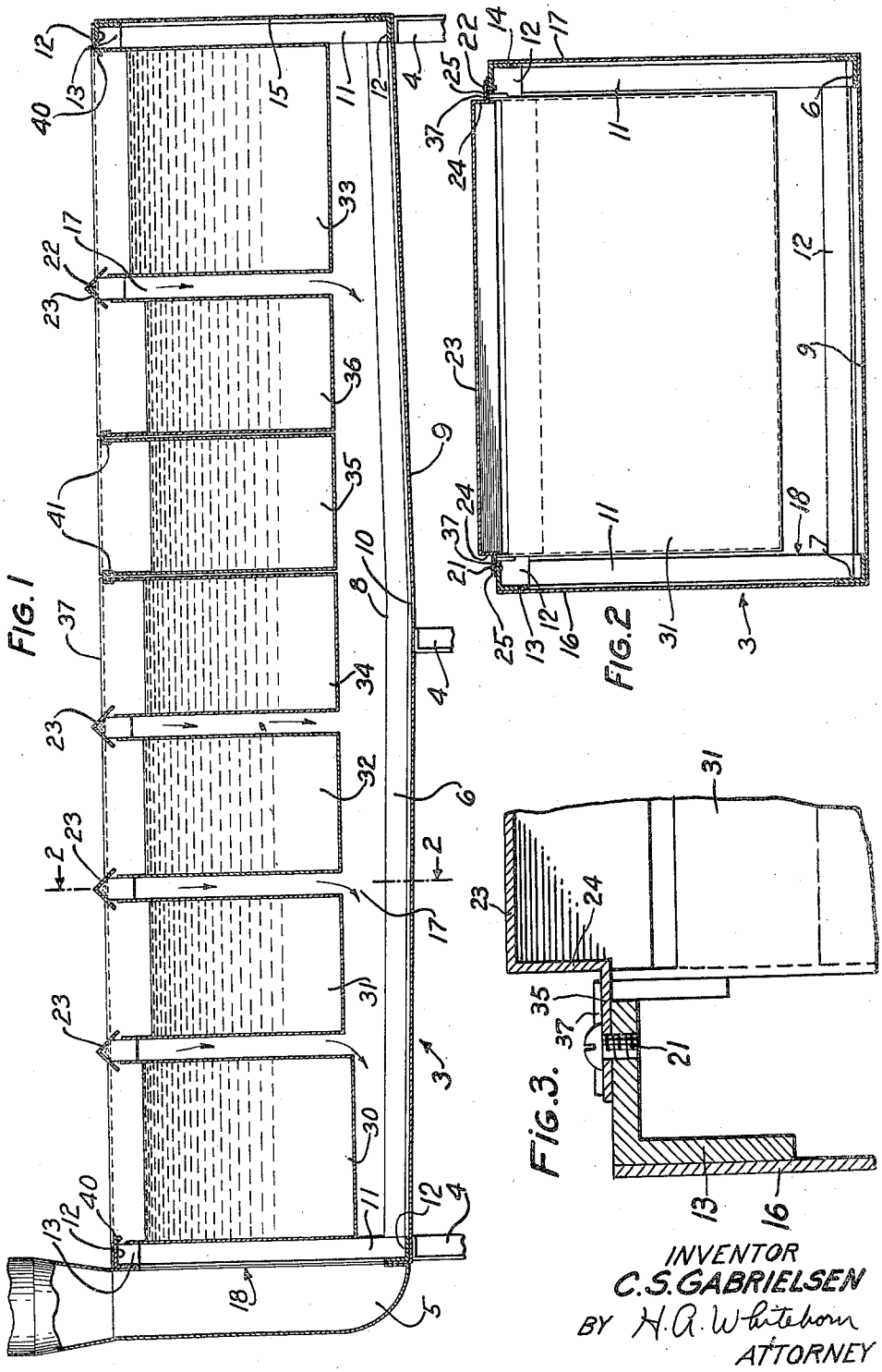

Fig. 1

Fig. 2

Fig. 3.

INVENTOR
C. S. GABRIELSEN
BY H. A. Whitehorn
ATTORNEY

Patented Mar. 15, 1938

2,110,991

UNITED STATES PATENT OFFICE

2,110,991

EXHAUSTING APPARATUS

Carl S. Gabrielsen, Chicago, Ill., assignor to Western Electric Company, Incorporated, New York, N. Y., a corporation of New York

Application June 6, 1936, Serial No. 83,863

1 Claim. (Cl. 98—115)

This invention relates to exhausting apparatus, and more particularly to an exhausting apparatus for removing obnoxious fumes from cleaning tanks or the like.

It is an object of the present invention to provide a simple and efficient exhaust system for exhausting fumes from tanks without hindering access to the tanks.

In accordance with one embodiment of the invention, the cleaning tanks from which the fumes are to be drawn and which may be tanks containing hot solutions of chemical substances in which parts are dipped to clean them before applying a plating to them, are positioned in a large rectangular exhaust tank in which they are laterally spaced one from another to provide vertical passages therebetween, and baffles are positioned at the tops of the vertical passages so that the exhaust currents will be drawn from the surfaces of the liquids in the cleaning tanks, first in a horizontal direction to the sides of the cleaning tanks and thence against the baffles and downwardly to the main exhaust chamber which is in the bottom of the exhaust tank. A suitable exhausting mechanism is provided for creating a suction in the exhaust tank.

A better understanding of the invention will be had by reference to the following detailed description when taken in conjunction with the accompanying drawing, wherein

Fig. 1 is a vertical sectional view taken longitudinally of a tank of an exhaust system embodying the features of the invention;

Fig. 2 is a sectional view taken on the line 2—2 of Fig. 1 in the direction of the arrows, and

Fig. 3 is an enlarged fragmentary view of the upper corner of the apparatus also taken along the line 2—2 of Fig. 1 in the direction of the arrows.

Referring now to the drawing wherein like reference characters designate the same parts in the several views, a large tank designated by the numeral 3 is supported upon suitable standards 4—4 and has connected to the left hand end thereof (Fig. 1) an exhaust pipe 5 which may be connected to a suitable exhaust fan (not shown). The tank 3 is made up of a plurality of metallic sheets and an angle iron framework. The framework comprises a pair of base angle members 6 and 7 which are bent at 8 so that the bottom plate 9 of the tank 3 will be inclined downwardly towards the center for drainage purposes, a suitable aperture 10 being formed in the plate which may or may not be fitted with a closure member (not shown). Secured to the angle members 6 and 7 are a plurality of upright angle members 11, the pair at each end being connected together at their upper and lower ends by angle members 12 and the upper pair of members 12 are secured to longitudinally extending angle members 13 and 14 to form a substantially rectangular framework to which an end plate 15 and side plates 16 and 17 and the bottom plate 9 may be secured. The structure just described forms a substantially rectangular tank made up of an angle iron framework and sheet metal sides and bottom. The left end of the tank 3 is left open as indicated at 18 for communication with the exhaust pipe 5.

The angle members 13 and 14 have a plurality of tapped holes formed therein to receive screws 21 and 22 which extend through suitable apertures formed in baffle members 23. The baffle members 23 are provided with ends 24—24, a portion of which is bent over at 25 and drilled to receive the mounting screws 21 and 22. The portion of the baffle 23 extending between the ends 24 is inverted V-shaped in cross-section as clearly shown in Figs. 1 and 3, for the purpose of extending downwardly and over the edges of a plurality of cleaning tanks 30, 31, 32, 33, 34 and 36.

The cleaning tanks 30, 31, 32 and 33 and other cleaning tanks 34, 35 and 36, are a conventional type of cleaning tank. Each is provided at its ends with brackets 37 (Fig. 1) which rest upon the angle members 13 and 14 to support the tanks 30 to 36 in the exhaust tank 3. Each of the end angle members 12 is provided with a baffle 40 which extends over the edge of the tanks 30 and 33 which are positioned at opposite ends of the exhaust tank 3.

The tanks 30 to 36 may be placed in any desired order in the exhaust tank 3, and when placed in the order shown in Fig. 1, the obnoxious fumes generated by the chemical action of cleaning parts, for example, in the tanks 31, 32 and 33, will be drawn horizontally over the surface of the liquids in the tanks, and then drawn downwardly through the passages formed by the sides of the cleaning tanks directly beneath the baffles 23, through the bottom portion of the exhaust tank and thence out through the exhaust pipe 5. It will be noted that the edges of the tanks 34, 35 and 36 extend somewhat higher than do the edges of the tanks 30 to 33, inclusive. In the embodiment of the invention disclosed, the tanks 34, 35 and 36 contain fluids which do not give off obnoxious fumes and, therefore, it is not necessary to exhaust them. Therefore, baffles 23 which engage the left and right edges

of the tanks 34 and 36, respectively, do not have an opening between the baffle and the tank to permit the air from the tanks to be drawn out through the exhaust system. It will also be noted that a pair of U-shaped caps 41 have been placed over the adjoining edges of the cleaning tanks 34 and 35, and 35 and 36, so that the efficiency of the exhausting of the tanks which give off obnoxious fumes will not be interfered with. With the arrangement shown, the cleaning tanks 30 to 36 may be placed in the exhaust tanks in any desired order and any selected ones of the cleaning tanks may have the obnoxious fumes generated therein drawn off through the exhaust system by simply changing the position of the baffles 23 and placing the U-shaped caps 41 in the desired positions.

Although a particular embodiment of the invention has been described hereinbefore, it will be understood that the invention is subject to many modifications without departing from the scope of the appended claim.

What is claimed is:

In an apparatus for removing fumes from a plurality of adjacent cleaning tanks, a relatively large exhaust tank having an open top, and means for supporting a plurality of relatively small cleaning tanks therein in spaced relation to provide vertical passages between the cleaning tanks and the walls of the exhaust tank and between adjacent cleaning tanks, a plurality of baffles supported by said exhaust tank and positioned adjacent edges of the cleaning tanks, means for creating a suction in the exhaust tank thereby to withdraw fumes from the surfaces of the cleaning tanks and into position to be deflected by the baffles downwardly through the passages formed between the cleaning tanks and then horizontally beneath the cleaning tanks.

CARL S. GABRIELSEN.