W. R. MACKLIND.

ELECTRIC HEATING DEVICE.

APPLICATION FILED SEPT. 11, 1915.

1,277,621.

Patented Sept. 3, 1918.

2 SHEETS—SHEET 1.

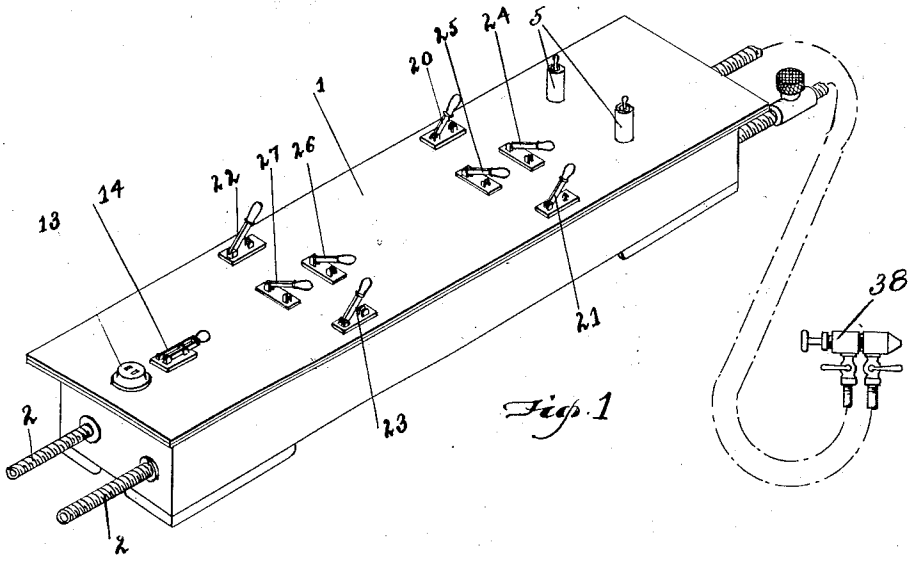

Fig. 1

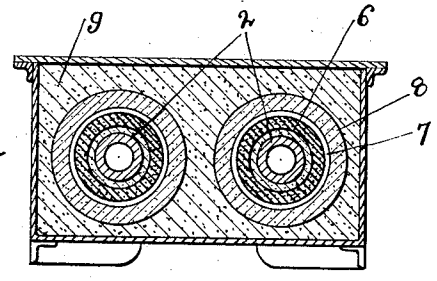

Fig. 2

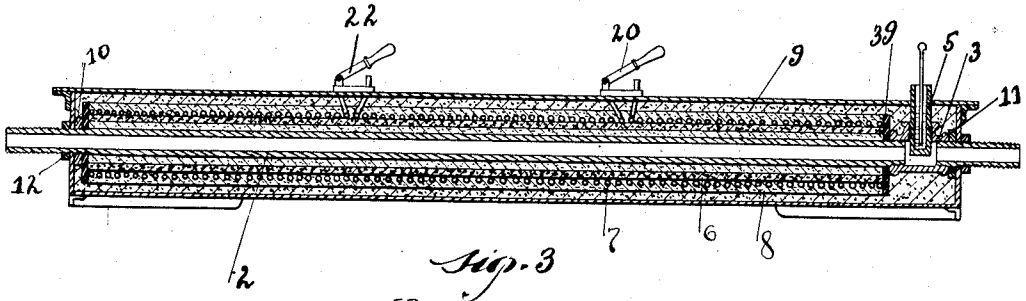

Fig. 3

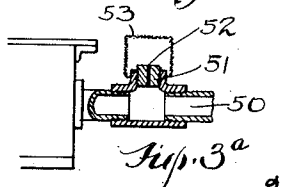

Fig. 3a

WITNESSES=
O M Kappler
Thos. H Fay

INVENTOR
William R. Macklind
By Fay, Oberlin & Fay
ATTORNEYS

W. R. MACKLIND.

ELECTRIC HEATING DEVICE.

APPLICATION FILED SEPT. 11, 1915.

1,277,621.

Patented Sept. 3, 1918.

2 SHEETS—SHEET 2.

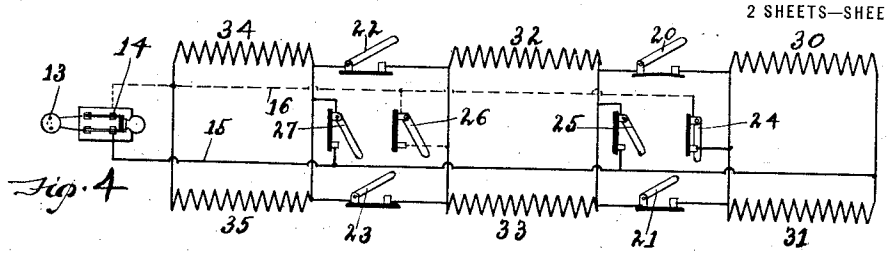

Fig. 4

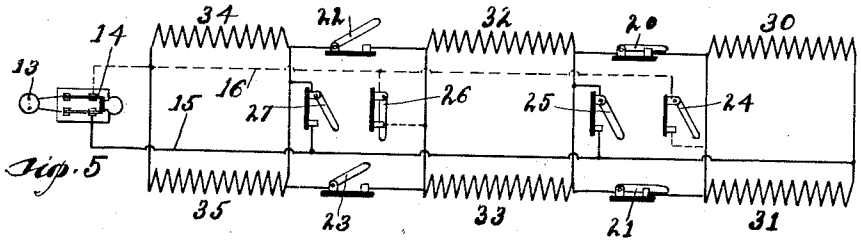

Fig. 5

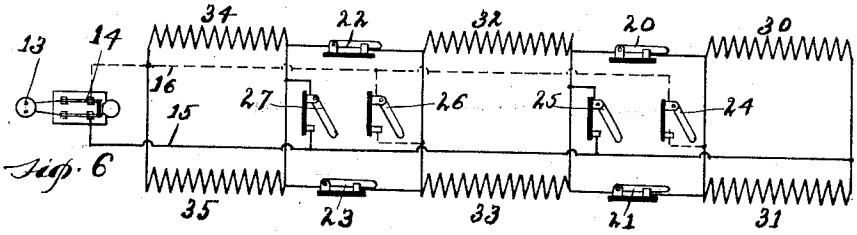

Fig. 6

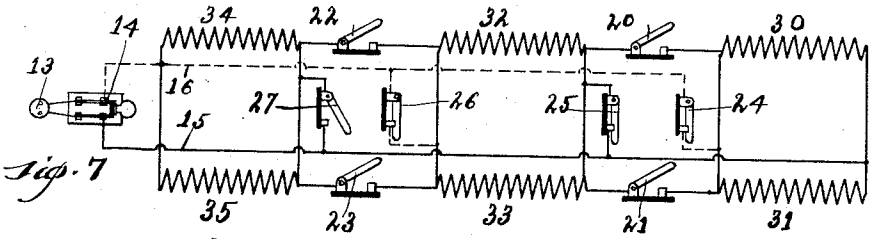

Fig. 7

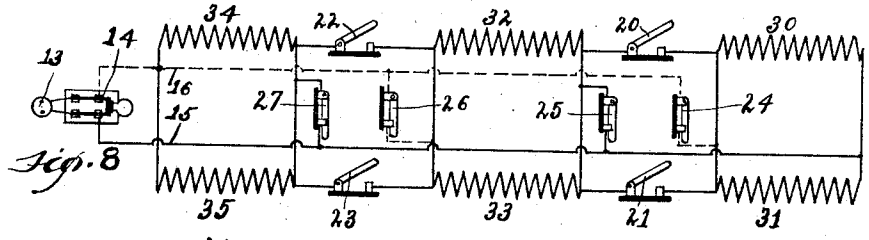

Fig. 8

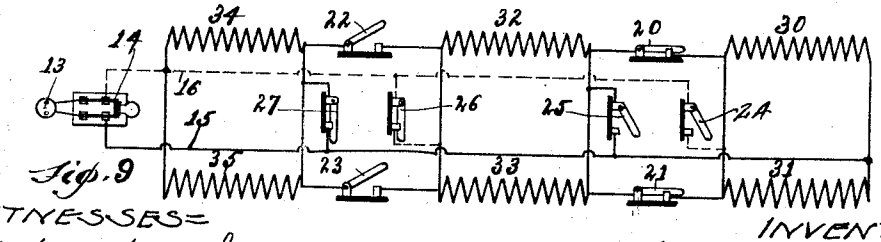

Fig. 9

WITNESSES=

O. M. Kappler.

Thos H. Fay

INVENTOR

William R. Macklind

BY Fay, Oberlin & Fay.

ATTORNEYS.

UNITED STATES PATENT OFFICE.

WILLIAM R. MACKLIND, OF CLEVELAND, OHIO, ASSIGNOR TO THE SHERWIN WILLIAMS COMPANY, OF CLEVELAND, OHIO, A CORPORATION OF OHIO.

ELECTRIC HEATING DEVICE.

1,277,621. Specification of Letters Patent. Patented Sept. 3, 1918.

Application filed September 11, 1915. Serial No. 50,152.

To all whom it may concern:

Be it known that I, WILLIAM R. MACKLIND, a citizen of the United States, and a resident of Cleveland, county of Cuyahoga, and State of Ohio, have invented a new and useful Improvement in Electric Heating Devices, of which the following is a specification, the principle of the invention being herein explained and the best mode in which I have contemplated applying that principle, so as to distinguish it from other inventions.

The present invention relates to an electric heating device for heating varnish, or like materials, and air preparatory to applying the same to an article by means of an air brush. In a device of this type, it is essential that varying degrees of heat be easily obtained so that the fluids may be kept at an even temperature.

Another object is to provide a heater which may be easily handled and carried from place to place and it is also essential that it be operable from any usual source of electric energy such as lighting system or the like. To the accomplishment of the foregoing and related ends, said invention, then, consists of the means hereinafter fully described and particularly pointed out in the claims.

The annexed drawing and the following description set forth in detail certain mechanism embodying the invention, such disclosed means constituting, however, but one of various mechanical forms in which the principle of the invention may be used.

In said annexed drawing:—

Figure 1 is a perspective view of my heating device showing the casing closed; Fig. 2 is a cross-section showing the disposition of the heating tubes; Fig. 3 is a longitudinal section of the device; Fig. 3ª is an enlarged sectional view of the bleeder valve and Figs. 4, 5, 6, 7, 8 and 9 are diagrammatic views of the electrical circuits, showing the heating coils connected in various ways to give different heating effects.

As illustrated my device consists of a casing 1 through which the heating tubes 2 pass. These tubes are adapted to carry the fluids to be heated and will be connected to a source of supply (not shown) and to an air brush 38 as shown in Fig. 1.

The tubes will be preferably threaded into the casing 1 but the manner of holding them in position is of course immaterial. A union 3 will be provided at the outlet end which has a thermometer well 5 therein.

The tubes are first inclosed in a thin layer 6 of insulating material such as alundum or the like and then have the heating coils 7 wound thereon. A second layer 8 of alundum or other like insulating material is then placed around the heating coils. The waste space between the tubes and the casing will be filled with a non-conducting material 9 such as magnesia or the like. In placing the tubes in the casing insulating disks 39 are placed against the ends of the insulating material and the coils and then a nut 10 is threaded on to the tube to maintain the disk in place.

The union 3 at the outlet end will be threaded on to the tube and will maintain the disk 39 in place, a washer 11 being placed between the union and the casing. Two locking nuts 12 are used to maintain the tubes in position in the casing. A socket 13 is mounted at one end of the casing and is adapted to be connected to a source of electric current. Upon the casing I mount a switch 14 which controls the entire circuit through the coils.

The heating coils are divided into sections, three in number as shown, the corresponding sections of each coil being connected in parallel so that the heating effect will be the same in each tube. As shown in Fig. 1 and diagrammatically in Figs. 4 to 9 inclusive I employ switches 20 to 27 inclusive which serve to cut the various sections of the heating coils into and out of the circuit as desired.

As illustrated in the wiring diagrams, a main wire 15 leads from the switch 14 the entire length of the device and is connected to the two end sections 30 and 31 of the heating coils. These are connected in series with the adjacent sections 32 and 33 by means of switches 20 and 21. The two end

sections 34 and 35 may be connected in series with the other sections by switches 22 and 23. A return wire 16 is provided and the corresponding sections are connected to this return and to the feed wire 15 by the switches 24 to 27 inclusive.

Different heating effects may be obtained by arranging the corresponding sections in series parallel or in parallel as desired, the arrangement shown in Fig. 4 effected by closing the switch 24 being such that the two end coils 30 and 31 are connected in parallel across the line, so that these two coils alone are in circuit.

Figs. 5 and 6 respectively show the sections of coils inclosing each tube placed in series, the two series being in parallel in the circuit. In Fig. 5, two sections of each coil are in operation while in Fig. 6 by closing switches 20 to 23 inclusive the three sections of each coil are in series. By this means the resistance will be very great so that the current flowing and the heating effect secured will be lowest when the coils are connected as shown in Fig. 6. and slightly higher when the coils are connected as shown in Fig. 5 and still higher when only the two end coils are used as shown in Fig. 4.

To obtain greater heating effects, the sections of the coils are arranged in parallel in circuit. As shown in Fig. 9, sections 30 and 32, and sections 31 and 33, are in series, but these two series are in parallel with each other and with sections 34 and 35. This is accomplished by closing the switches 20, 21, 26 and 27. By closing the switches 24 to 26 inclusive, the sections 30 to 33 inclusive are connected in parallel and more heat is obtained. This arrangement is illustrated in Fig. 7 while the greatest heating effect is obtained by placing all the sections in parallel as illustrated in Fig. 8. To accomplish this, switches 24 to 27 are closed, the other switches being left open.

Of the heating tubes 2 one will be the air line and to this tube is connected on the discharge or down side, a bleeder valve as shown in Figs. 1 and 3ª. This valve comprises a casing 50 having a lateral opening closed by a plug 51 which is provided with a small escape opening 52. The air passes through such opening 52 into a muffler of some simple type such as screen 53. The object of this bleeder valve is to maintain a constant circulation through that part of the air line lying in the heater, even when the brush 38 is not in use, since otherwise the air tube 2 is heated to such a point that it burns out. No such valve is needed in the varnish line since the varnish serves to absorb the heat and prevent burning out of this tube.

The operation of the device is thought to be clear as the varnish and air are forced through the tubes and the flexible connection to the air brush. By connecting the device to the source of current supply, the varnish and air may be heated, various degrees of heat being easily obtained by manipulating the switches on the casing. As will readily be seen the heat may be varied within a relatively large range so that the ingredients may be kept at any temperature desired. By watching the thermometers which are placed in the wells at the outlet end of the casing, it will be an easy matter for the operator to keep the varnish and air at the desired temperature.

Other modes of applying the principle of my invention may be employed instead of the one explained, change being made as regards the mechanism herein disclosed, provided the means stated by any of the following claims or the equivalent of such stated means be employed.

I therefore particularly point out and distinctly claim as my invention:—

1. In an electric heating device, the combination of a casing, two tubes removably mounted in said casing and adapted to carry different fluids to be heated, heating coils surrounding said tubes, said coils being divided into sections and means for rendering corresponding sections of the two coils operative.

2. In an electric heating device, the combination of a casing, two tubes removably mounted therein and adapted to carry different fluids to be heated, heating coils surrounding each tube, means for varying the heating effect of said coils, and non-conducting material filling the space between said coils and said casing.

3. In an electric heating device, the combination of a casing, tubes passing therethrough and adapted to carry different fluids to be heated, thermometer wells in said casing adjacent the outlet ends of said tubes, heating coils inclosing said tubes, said coils being divided into sections, switch means mounted on said casing and adapted to render said heating coils effective as desired and non-conducting material packed about said heating coils and tubes.

4. In an electric heating device the combination of a casing, two tubes removably mounted therein and adapted to carry the fluids to be heated, heating coils surrounding said tubes but insulated therefrom and from said casing, said coils being divided into sections, the sections of each coil being normally connected in series, and switch means adapted to render said sections ineffective as desired.

5. In an electric heating device, the combination of a casing, two tubes removably mounted therein and adapted to carry the fluids to be heated, heating coils surrounding said tubes but insulated therefrom and from said casing, said coils being divided

into sections, the sections of each coil being normally connected in series, and switch means adapted to connect corresponding sections of said coils in parallel as desired.

6. In an electric heating device, the combination of a casing, two tubes removably mounted therein and adapted to carry the fluids to be heated, heating coils surrounding said tubes but insulated therefrom and from said casing, said coils being divided into sections, the sections of each coil being normally connected in series, and switch means mounted upon said casing and adapted to connect corresponding sections of said coils in parallel, each two corresponding sections being rendered effective at the same time.

7. In an electric heating device, the combination of a casing, two tubes removably mounted therein and adapted to carry the fluids to be heated, heating coils surrounding said tubes but insulated therefrom and from said casing, said coils being divided into sections, the sections of each coil being normally connected in series, and switch means mounted upon said casing whereby the corresponding sections of said heating coil may be arranged in parallel or in series parallel as desired.

8. In a heating device, the combination of a casing, tubes mounted in said casing and adapted to carry the fluids to be heated, heating coils encircling said tubes and insulated therefrom and from said casing, said coils being divided into sections, means mounted upon said casing whereby said coils may be connected to an electrical circuit and switch means mounted on said box and adapted to control said circuit, and other switch means mounted on said box and adapted to render such sections of said coils effective as desired.

9. In a heating device, the combination of a casing, tubes mounted in said casing and adapted to carry the fluids to be heated, heating coils encircling said tubes and insulated therefrom and from said casing, said coils being divided into sections, means mounted upon said casing whereby said coils may be connected to an electrical circuit and switch means mounted on said box and adapted to control said circuit, and other switch means mounted on said casing and adapted to arrange said corresponding sections of said coils in series parallel or in parallel in such circuit.

10. In an electric heating device, the combination of a casing, tubes passing through said casing and protruding from the ends thereof, said tubes being adapted to carry different fluids to be heated, insulating material inclosing said tubes for approximately their entire length within the casing, a heating coil surrounding each tube and embedded in such insulating material, non-conducting material disposed around such insulated tubes and means for varying the heating effect in said coils.

11. In an electric heating device, the combination of a casing, a heating tube removably mounted within said casing and protruding from the ends thereof, a layer of insulating material inclosing said tube for approximately the entire length within said casing, a heating coil wound upon such insulating layer, a second layer of insulating material inclosing said heating coil, said coil being insulated from said casing at the ends, the space around said tube being filled with non-conducting material, a thermometer well being formed in said casing and said tube at one end thereof.

12. In an electric heating device the combination of a heating casing, a tube passing through said casing and adapted to carry a fluid to be heated, and a bleeder valve connected to said tube on the discharge side of said casing.

13. In an electric heating device the combination of a heating casing a tube passing through said casing and adapted to carry a fluid to be heated, and a permanently open valve connected to said tube on the discharge side of said casing for maintaining a constant flow of such fluid through said tube.

14. In an electric heating device the combination of a heating casing a tube passing through said casing and adapted to carry a fluid to be heated, and a valve connected to said tube on the discharge side of said casing and having a discharge opening of small cross sectional area relative to that of said tube.

15. In an electric heating device the combination of a heating casing, a tube passing through said casing and adapted to carry a fluid to be heated, a valve connected to said tube on the discharge side of said casing and having a discharge opening of small cross sectional area relative to that of said tube, and a muffler disposed about such discharge opening in said valve.

16. In an electric heating device the combination of a heating casing a tube passing through said casing and adapted to carry a fluid to be heated, a valve connected to said tube on the discharge side of said casing and having a discharge opening of small cross sectional area relative to that of said tube and a muffler screen disposed about such discharge opening in said valve.

17. In an electric heating device, the combination of a casing, tubes passing through said casing and adapted to carry fluids to be heated, and a permanently open valve connected to one of said tubes on the discharge end of said casing for maintaining a constant flow of the fluid through the tube.

18. In an electric heating device, the combination of a casing, two tubes removably

mounted through said casing, and adapted to carry the fluids to be heated, one of said tubes being adapted to carry the air to be heated, and a permanently open valve connected to said air carrying tube on the discharge side of said casing for maintaining a constant flow of air through said tube.

Signed by me, this 9th day of September 1915.

WILLIAM R. MACKLIND.

Attested by—
A. D. SCHRADER,
W. J. CRITCHLEY.