E. E. CARNEAL.

KNIFE SHARPENER.

APPLICATION FILED APR. 12, 1915.

1,165,070. Patented Dec. 21, 1915.

Fig. 1.

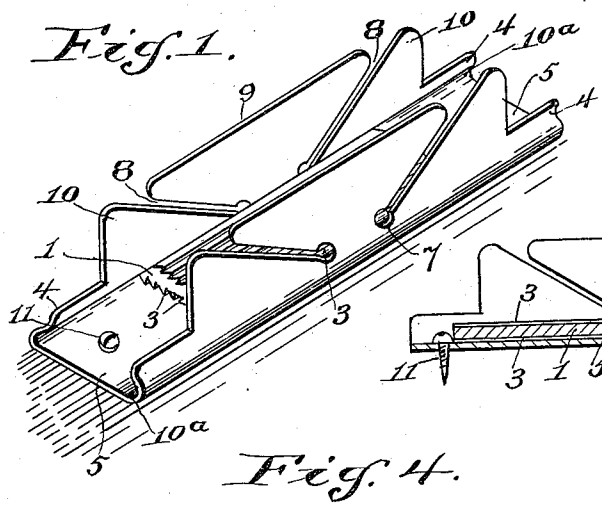

Fig. 2.

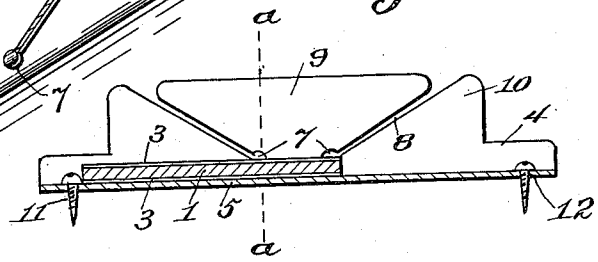

Fig. 4.

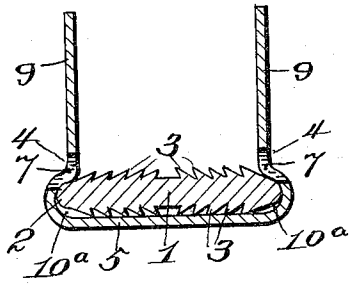

Fig. 3.

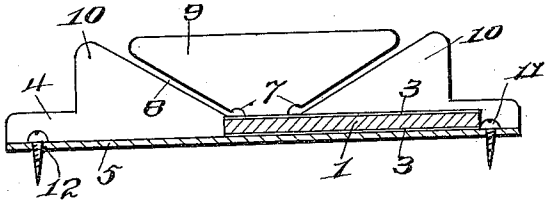

Fig. 5.

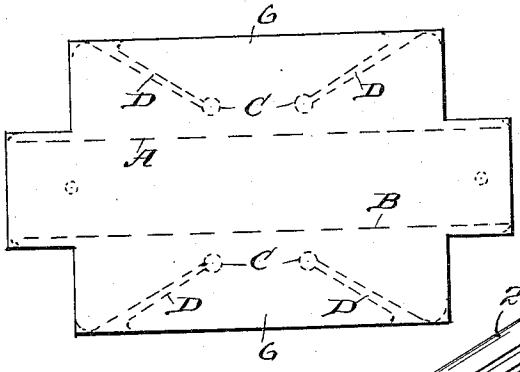

Fig. 6.

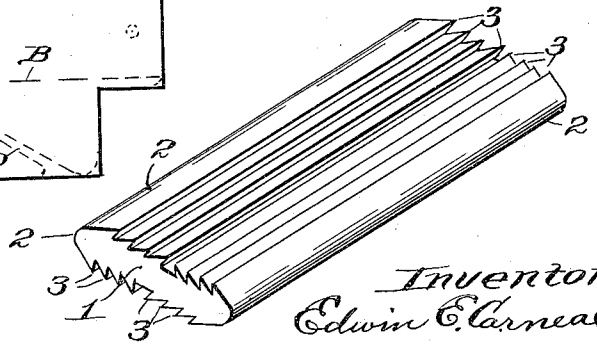

Witnesses:
V. H. Whitman
R. F. Lansdale

Inventor,
Edwin E. Carneal
By C. F. Belt
Attorney.

COLUMBIA PLANOGRAPH CO., WASHINGTON, D. C.

UNITED STATES PATENT OFFICE.

EDWIN E. CARNEAL, OF WASHINGTON, DISTRICT OF COLUMBIA, ASSIGNOR OF ONE-HALF TO FRED O. LAKE, OF WASHINGTON, DISTRICT OF COLUMBIA.

KNIFE-SHARPENER.

1,165,070. Specification of Letters Patent. Patented Dec. 21, 1915.

Application filed April 12, 1915. Serial No. 20,846.

To all whom it may concern:

Be it known that I, EDWIN E. CARNEAL, a citizen of the United States, residing at Washington, in the District of Columbia, have invented certain new and useful Improvements in Knife-Sharpeners, of which the following is a specification.

This invention relates to devices for sharpening cutlery, and pertains especially to a device for sharpening knife blades.

The object of the invention is to provide a blade sharpening device having the sharpening element thereof capable of adjustable sliding movement according to the wear of the element under repeated sharpening operations.

A further object of the invention is to provide a reversible knife sharpening plate slidably contained in a holder for guiding the knife blade during a sharpening operation.

A still further object of the invention is to provide, in a blade sharpening device, a novel and peculiar holder for retaining a slidably adjustable sharpening plate.

Various advantages and improved results are attainable in the practical application of the invention, as will be hereinafter fully set forth.

In the accompanying drawings forming part of this application: Figure 1 is a perspective view. Figs. 2 and 3 are longitudinal sections showing the sharpening plate in adjusted positions. Fig. 4 is an enlarged cross section on the dotted line *a*—*a* Fig. 2. Fig. 5 is a plan view of the holder blank. Fig. 6 is a detail perspective view of the sharpening plate.

The same reference characters denote the same parts throughout the several views of the drawings.

The sharpening element consists of a plate 1, having convex edges 2, and both faces of the plate are composed of parallel longitudinal sharpening teeth 3. One face of the plate may have larger or smaller teeth than the other face, if desired, for affording a coarser or finer sharpening surface. The plate is preferably composed of steel having the teeth properly tempered for accomplishing proper sharpening of various knife blades.

The plate holder is preferably stamped in a single piece of metal of sufficient thickness as to be bent into proper shape on the lines A and B, to form inturned flanges 4 along the side edges of the base 5. Each of the flanges 4 has an extension 6, which is perforated and slotted at the dotted lines C and D respectively, prior to bending the flanges 4 into position. The extensions 6 are cut out on the dotted lines C and D, to form holes or perforations 7, and inclined blade slots or guideways 8, between the central wings 9 and the end wings 10. The wings 9 and 10 in bent up position project vertically from the inturned flanges 4, so as to stand in horizontal alinement over the side edges of the sharpening plate 1, which is slidably held upon the base 5 of the holder by means of the inturned flanges 4, and the plate over-lapping wings 9 and 10.

The holes or apertures 7 are made at the intersection of the flanges 4 and the wings 9 and 10 so that the teeth of the plate 1 cross the longitudinal center line of said holes and thereby prevent a blade edge engaging the walls of the holes. The slots 8 extend from the holes 7 to the top edge of the wings 9 and 10 on such angle as to guide a blade onto the teeth in proper sharpening position. The inturned flanges form grooves 10^a for the convexed edges of the plate 1, and said plate is inserted into the grooves from either end of the holder before applying the screws 11. The over-lapping flanges and the wings hold the plate 1 for sharpening operations.

The heads of the screws 11 limit the sliding movement of the plate 1 for sharpening adjustment. The screw holes 12 and screws 11 are so placed relative to the slots and holes 7, as to permit the whole length of the teeth from one end to the other of the plate 1, to be used for sharpening. When the plate 1 is moved in either direction to its limit one end thereof engages one of the screw heads and the other end thereof is opposite the pair of holes 7 nearest the other screw, so that said latter end of the toothed plate is still in sharpening position.

I prefer to make the sharpening teeth in two sets for each side of the plate 1, so that the teeth comprising the sets will point or incline toward each other, for the purpose of affording the same or equal sharpening capacity during both the inward and outward movements of the blade. In order that the plate teeth may be used throughout their length for sharpening purposes, the

plate is pushed along in the grooves to various positions, according to the wear of the teeth. The plate may be withdrawn from the holder and again inserted in reversed position, whereby both sides of the toothed plate are available for sharpening purposes. Obviously a knife blade is inserted into the slots 8 with the edge of the blade in the holes 7 and against the teeth. In said position the knife is reciprocated lengthwise first in one pair of slots or guideways and then in the other pair for sharpening the blade. It will be seen that, in view of the angle of the guideways relative to the toothed plate, the blade is held at the same angle during the sharpening operations, whereby the sharpening is limited to the blade edge, so as to produce a uniformly sharpened cutting edge without having the body or sides of the blade engage the sharpening element. While the device is illustrated for use in horizontal position, it may be fixed in vertical position, if desired, for sharpening purposes.

I do not wish to be understood as confining the device to any particular size or material, nor to the grade or form of the sharpening teeth, but reserve the right to make such changes or variations in the device and in the practical application thereof as may come within the scope of the appended claims.

Having thus described my invention what I claim as new and desire to secure by Letters Patent is:—

1. In a knife sharpener, a reversible plate having sharpening teeth faces, and a holder comprising a flanged base for slidably retaining the plate, and a plurality of wings projecting from the flanges and forming the sides of the holder, said wings having knife slots therebetween permitting the knife edge to engage the teeth in a sharpening operation.

2. In a knife sharpener, a reversible plate having sharpening teeth, a holder having side flanges for slidably retaining the plate, said holder having parallel sides provided with inclined knife slots extending from the intersection of the sides and the flanges, and holder fastening means for limiting the movement of the plate.

3. In a knife sharpener, a reversible plate having sharpening teeth, a one piece holder having inturned flanges forming grooves for sliding the plate, slotted sides projecting from the flanges and over-lapping the side edges of the plate, and holder securing means for limiting the movement of the plate.

In witness whereof I hereunto set my hand in the presence of two witnesses.

EDWIN E. CARNEAL.

Witnesses:
J. Ross Colhoun,
Roger F. Lansdale.

Copies of this patent may be obtained for five cents each, by addressing the "Commissioner of Patents, Washington, D. C."