SCIENCE

(19) Europäisches Patentamt
European Patent Office
Office européen des brevets

(11) Publication number: **0 169 597**
B1

(12) # EUROPEAN PATENT SPECIFICATION

(45) Date of publication of patent specification: **28.03.90**

(21) Application number: **85201032.1**

(22) Date of filing: **28.06.85**

(51) Int. Cl.[5]: **G 11 B 27/00**, G 11 B 27/10, G 11 B 15/00, G 07 F 17/30, G 11 B 7/00, G 11 B 27/34, G 11 B 17/00

(54) **Apparatus for reproducing information from a record carrier.**

(30) Priority: **02.07.84 NL 8402095**

(43) Date of publication of application:
29.01.86 Bulletin 86/05

(45) Publication of the grant of the patent:
28.03.90 Bulletin 90/13

(84) Designated Contracting States:
AT BE DE FR GB IT SE

(56) References cited:
BE-A- 886 928
FR-A-2 520 914
GB-A-2 062 935
GB-A-2 102 184
NL-A-7 901 801
US-A-4 224 644

PATENTS ABSTRACTS OF JAPAN, vol. 7, no. 26 (P-172)1171r, February 2, 1983; & JP - A - 57 181 405

(73) Proprietor: **N.V. Philips' Gloeilampenfabrieken**
Groenewoudseweg 1
NL-5621 BA Eindhoven (NL)

(72) Inventor: **Custers, Pieter Hendrik**
c/o INT. OCTROOIBUREAU B.V. Prof. Holstlaan 6
NL-5656 AA Eindhoven (NL)
Inventor: **Verhulst, Ludovicus Martinus Cornelis**
c/o INT. OCTROOIBUREAU B.V. Prof. Holstlaan 6
NL-5656 AA Eindhoven (NL)

(74) Representative: **Peters, Rudolf Johannes et al**
INTERNATIONAAL OCTROOIBUREAU B.V. Prof. Holstlaan 6
NL-5656 AA Eindhoven (NL)

(56) References cited:
PATENTS ABSTRACTS OF JAPAN, vol. 8, no. 141 (P-283)1578r, June 30, 1984; & JP - A - 59 40 379

THE BKSTS JOURNAL, vol. 65, no. 7, July 1983, pages 384-388, London, GB; C. MARGADANT: "Interfacing A-V equipment to compact disc"

Note: Within nine months from the publication of the mention of the grant of the European patent, any person may give notice to the European Patent Office of opposition to the European patent granted. Notice of opposition shall be filed in a written reasoned statement. It shall not be deemed to have been filed until the opposition fee has been paid. (Art. 99(1) European patent convention).

Courier Press, Leamington Spa, England.

EP 0 169 597 B1

Description

The invention relates to an apparatus for reproducing information from a record carrier, which apparatus comprises read means for reading said record carrier, storage means for storing a preferred selection indicating a preferred part of the information recorded on the record carrier, means for controlling the read means in such a way that the preferred part indicated by the preferred selection stored can be reproduced.

Such an apparatus is known from US 4,224,644. The apparatus disclosed in this document is a tape player/recorder. A plurality of programs have been recorded on the tape. The user can select preferred parts of the information recorded. Start and stop points indicating the positions of these preferred selections on the tape can also be recorded on the tape. When later on the tape is reinserted into the player/recorder, the information indicative for the said start and stop points is loaded into the memory, and subsequently the player is controlled in such a way that the preferred selection indicated by the said start and stop points are played. The feature of automatically playing preferred selections of a record carrier as disclosed in the said document is not applicable for players of record carriers of the read-only type, such as e.g. compact discs.

The aim of the invention is to modify an apparatus as described in the opening paragraph such that this disadvantage is overcome.

According to the invention this aim is attained by a first embodiment of the apparatus as described in the opening paragraph, characterized by identification means for identifying a record carrier before it is played, write means for optionally writing into the storage means the identification found after loading of the record carrier together with a preferred selection made via input means, and means for setting the control means in such a way that if the storage means contain an identification which corresponds to the identification of the record carrier to be played the corresponding preferred selection as stored in the storage means can be reproduced. The apparatus in accordance with the invention automatically plays the preferred selections whose data has been stored in the storage means.

It is remarked that BE 886,928 discloses a video cassette player for playing video cassettes provided with a memory in which information about the contents of the cassette has been stored. After the insertion of the cassette this information is loaded into a central memory located in the player, thereby identifying the cassette inserted. However no combinations of record carrier identifications and preferred selection are stored in the memory.

For an efficient use of the available storage capacity a further embodiment of this apparatus in accordance with the invention may be characterized in that the write means are adapted to combine a code representing the identification and a code representing the preferred selection to blocks in the storage means, the blocks in order to detect whether the identification of a record carrier to be played corresponds to the identification stored in the storage means.

A preferred embodiment of apparatus in accordance with the invention may be characterized further in that the write means are adapted to add to the blocks a sequence number and a code which indicates the position of the next block, and the read means are adapted to determine the address of the next block as a function of the stored length of the block read.

Further, it is advantageous if this preferred embodiment comprises means for displaying the sequence number of the block which corresponds to a record carrier to be or being played.

The use of a sequence number in addition to the identification and the display of this sequence number enables the user to keep a record of his preferred selections in a simple manner, for example by marking the record carrier sleeve with the sequence number; indeed, the sequence number is much simpler than the generally very complex identification.

The aim of the invention is also attained by a second embodiment of the apparatus as described in the opening paragraph, characterized in that the information is digital audio information encoded in accordance with the "compact-disc digital audio" standard, the identification means being adapted to receive the subcode for identifying the record carrier to be played by selecting predetermined bit groups from the subcode, in that the storage means are adapted for storing identifications of a plurality of record carriers and the corresponding preferred selections, the apparatus further being provided with means for setting the control means in such a way that if storage means contain an identification which corresponds to the identification of the record carrier to be played the corresponding preferred selection as stored in the storage means can be played. This embodiment is in particular suitable for automatically playing preferred parts of "compact-discs". The use of bit groups in the subcode for identification provides a very simple and substantially unique identification of the compact disc to be played.

The invention is not limited to the compact disc digital audio player, but may also be used in conjunction with, for example, video disc players and digital magnetic and optical recorders.

The invention will now be described in more detail, by way of example, with reference to the accompanying drawings, in which:

Fig. 1 shows schematically an embodiment of the invention,

Figs. 2 and 3 are diagrams to explain the operation of the embodiment shown in Fig. 1, and

Fig. 4 is a flow chart to explain the programming of the microcomputer 3 used in the embodiment shown in Fig. 1.

Fig. 1 shows the block diagram of a compact disc player in so far as it is relevant to the present invention. The description is based on known

commercially available compact-disc players, such as for example the player which is available from N.V. Philips' Gloeilampenfabrieken under type number CD 304. These known players comprise a programme-selection control panel 1, for example a row of keys which each correspond to a specific track number and a display 2 which displays the selected choice, for example a row of lights which each correspond to a specific track number. Apart from the possibility of programming a track-number selection it may also be possible to make a selection by index (parts of tracks), time within a track number, or absolute time. A microcomputer 3 scans the control panel 1 and drives the display 2. Further, the microcomputer 3 can store the programme selection made in, and read it from, a programme memory 4 to control the player in such a way that the selected items on the disc to be played are reproduced. For this purpose the microcomputer 3 receives a subcode from a subcode decoder 5, which subcode is contained in the music data on the disc and is a running code representing *inter alia* track numbers, index and time, so that the microcomputer receives information about the location on the disc being reproduced.

In accordance with the invention the player has the possibility of storing preferred programme selections of a plurality of discs in a memory, identifying discs to be played and, if desired, playing the preferred programme selection. For this purpose the microcomputer 3 is programmed to derive a disc identification code ID from the subcode supplied by the decoder circuit 5. The identification code may be, for example, a catalogue number contained in this subcode or an indication of a composer, performer, title etc., but at least to date this data is not contained in the subcodes of all discs. Therefore, it is more advantageous to derive identification code ID from data present on every disc. One possibility is to select specific bit groups from the index table present on every disc, which table is shown schematically in Fig. 2. This index table comprises serial data in the form of groups of 4 bytes (4×8 bits) represented in hexadecimal notation in Fig. 2. The first byte of every group represents the track number, the second, the third and the fourth byte the time after the beginning of the disc at which said track starts, expressed in minutes (2nd byte), seconds (3rd byte), and frames (4th byte), one frame being equal to 1/75 second. The index of all the track numbers is followed by three 4-byte code blocks whose first bytes are A0, A1 and A2 respectively. The second byte of the block with the initial byte A0 represents the number of the first track on the disc to be played, which number need not necessarily be one because a continuous sequence of numbers may be assigned to a plurality of discs. The third and the fourth byte of this group are both 00. The group with the initial byte A1 in a similar way represents the number of the last track in the second byte, and the third and the fourth byte are 00. The group with the initial byte A2 represents the time from the beginning of the lead-out track in minutes, seconds and frames in the second, the third and the fourth byte, respectively.

The number of minutes and seconds of the first track number are not arbitrary. The number of frames (4th byte) is generally more or less arbitrary and is selected as the first byte of the disc identification code ID. Both the number of seconds and the number of frames of the second track may be regarded as more or less arbitrary and therefore these two bytes have been selected as the second and the third byte of said ID code, said bytes being for example 00 if the disc contains only one track. The second hexadecimal half of the second byte of the group with the initial byte A1 together with the second hexadecimal half of the second byte of the last group may be selected to form together the fourth byte of the identification code ID. The fifth and the sixth byte of this code are constituted by the last two bytes of the last group which indicate the number of seconds and frames from the beginning of the lead-out track. In Fig. 2 the selected bytes have been encircled and together with the selected numerical examples they constitute the hexadecimal code 32—15—12—72—48—41. In practice, the resulting disc identification code may be regarded as a unique code. In this respect it is to be noted that an identification code may be derived from the information to be reproduced instead of from a subcode which is not necessarily present.

The disc identification code ID described with reference to Fig. 2 is derived from the subcode supplied by the decoder circuit 5 by suitably programming the microcomputer 3. Together with the preferred selection this code is stored in a memory 6. This information should be preserved in the memory 6 also after the player has been switched off, for example by the use of battery-powered RAM memories or non-volatile memories. In the first case the required storage capacity hardly affects the price and it is possible to select an organization such that a specific storage capacity is reserved for each disc-selection number (this is a sequence number assigned to a disc whose preferred selection has been stored), which capacity should be large enough to store a maximum number of selected tracks. In the case of non-volatile memories the storage capacity is still a factor which must be taken into account. In order to enable the preferred selections of a maximum number of discs to be stored a memory organization is then preferred which is such that no excess storage capacity is reserved. All the selections made are then stored directly after each other. Random access to the memory is then no longer possible because the various identification codes are no longer stored at fixed addresses. The memory is filled contiguously, a code being assigned to each block, which code indicates the length of this block and enables the address of each subsequent block to be computed. Fig. 3 shows an example of such a block. The first six bytes of the block comprises the

identification code ID; the next byte is an indication of the location L of the next block, which is achieved in the present example by indicating the length of the block; the following byte indicates the sequence number DN of the relevant disc within the selection of discs in conformity with the preference laid down by the user. This sequence number makes it easier for the user to keep a "record", for example by marking the sleeve of the disc with this sequence number. Finally, the block comprises a variable number of bytes MFT representing the selection made by the user. Since this selection can be made in different ways, it may be required to have bits which indicate the type addressing (track numbers, index or time) and merging bits. Alternatively, the various types of addressing may be combined. Examples of these are:

—track-number addressing. This demands one byte per choice.

—index-addressing within specific tracks. This requires two bytes per choice, namely one for the track number and one for the index.

—time within the selected track, which requires 5 bytes, namely one for the track number, two for the starting time (mins.; sec.) and two for the ending time.

—absolute-time selection, which requires four bytes, namely two for the starting time and two for the ending time.

In order to indicate the last block stored in the preferred-selection memory 6 the next byte after the last block is encoded in a predetermined manner, for example in hexadecimal notation with FF. The next new block may then be stored at this location if the storage capacity of the memory allows this.

If a block is cancelled, for example by erasing a block or by re-selection of a programme for a disc for which a selection has been made previously, which new selection cannot always be accommodated within the storage location occupied by the previous selection, this can be indicated by filling the location for the ID code with a code which indicates that this block is not valid and must be skipped. The cancelled blocks are used again by shifting the information when the memory is full. This is done because in specific types of non-volatile memories erasing and writing reduces the lifetime and demands a comparatively long time. If these drawbacks do not exist the cancelled blocks may be filled immediately by shifting the next blocks. An alternative for the cancellation of a block in the case of re-entry is to enter the new selection at the location of the old selection and, if the storage area is not adequate, to store a pointer which refers to the location where the remainder of the information is stored.

When a re-entry at the end is selected either the old sequence number may be maintained or the next number of the sequence may be chosen.

In the example described here the sequence number is maintained.

With respect to control and display special provisions may be made for keying in the selection made and for displaying this selection, but is advantageous to employ the keyboard 1 and the display 2.

In addition, the following functions (shown schematically in Fig. 1) may be provided:

—An erase key 7 by means of which a specific block in the preferred-selection memory can be invalidated when the sequence number of said block is also keyed in.

—An erase-all key 8 for erasing the entire preferred-selection memory in the case of a reorganization by the user. This key 8 must be protected to preclude inadvertent erasure of the programme, which can be achieved if several operations have to be performed for such an erasure.

—A review key 9 which enables the user to check the entire contents of the preferred-selection memory by displaying the sequence numbers with corresponding programmes in a specific rhythm in numerical order of the sequence numbers.

—An FTS key 10 by means of which the user can choose between reproduction of the preferred selection and the storage of a preferred selection.

—A store key 11 which enables the selection made to be keyed in *via* the keyboard 1.

—A pilot lamp 12 which indicates when the preferred-selection memory is full (or, as an alternative, another display may be caused to blink), and

—A display 13 which displays the sequence number of the identified disc or the disc number to be stored.

Fig. 4 is the flow chart of the programming of the microcomputer 3 in a preferred embodiment of the invention.

In block 14 the programme is started, for example by putting on a disc. Subsequently, a number of parameters are initialized in block 15, such as the parameters A which indicate the address in the preferred-selection memory 6 and F which is a flag which is used in the programme. In block 16 it is ascertained whether the user wishes to make use of the possibility of reproducing the preferred selection or wishes to employ the programming facility, for which purpose the position of the FTS key 10 is scanned. If the user does not wish to use the preferred-selection facility, the programme proceeds directly to block 26 to play the disc in the customary manner, as the case may be with a single selection via the keyboard 1, which programme choice is stored in the programme memory 4. If the user wishes to use the preferred-selection facility the identification code ID of the disc is determined in block 17 in accordance with the rules described with reference to Fig. 2. In block 18 the identification code IM is then read out of the preferred-selection memory 6 at address A which has been initialized in block 15, i.e. for the first time at the first location in the memory. Subsequently, it is checked in block 19 whether the code IM is identical to the code FF which indicates that the

memory does not contain any further preferred selections. If this is not the case the sequence number DN of the disc is read out at the address A+7 bytes in block 20. After this, in block 21 it is ascertained whether the read-out disc-identification code IM corresponds to the identification code ID of the disc to be played. If this is not the case, the length L of the block (see Fig. 3) at 6 bytes after address A is read out in block 27 and subsequently the address is incremented by said length L in block 28, after which the programme returns to block 18.

Leaving the loop 18—19—20—21—27—28 is possible in two ways: either the specific disc code is not contained in the memory, in which case the loop is left via block 19, or the disc code is stored, in which case an affirmative answer to the question ID=IM is obtained in block 21. The sequence number DN found in block 20 is then displayed by the display 13 as a sign that the disc to be played has the said sequence number and as a sign that reprogramming is possible if the user wishes to do so. Then a waiting time is observed in block 22 while the store key and the keyboard 1 are interrogated to allow the user to reprogramme. Subsequently, it is ascertained in block 23 whether reprogramming has been effected. If reprogramming has taken place an invalidation code is entered at address A in block 29 as a sign that the relevant preferred selection has become invalid. Subsequently, in block 30 the sequence number of the disc is stored by means of a parameter X and the flag F is set: =1) and the programme returns to the search loop 18—19—20—21—27—28 in block 27 to leave said loop via block 19 after the last preferred selection. If no reprogramming is detected in block 23, the programme proceeds to block 24 in which at an address 8 bytes after address A the preferred selection MFT corresponding to the loaded disc is read out of the memory 6, after which this preferred selection is stored in the programme memory 4 in block 25. The programme is then completed in block 26, the programme in the memory 4 being displayed by the display 2. This programme may have been obtained by reading out the preferred-selection memory 6 or by programming without preferred selection (output "N" in block 16).

If the identification number ID of a disc to be played does not correspond to one of the disc number stored in the preferred-selection memory or if reprogramming is to be effected, block 19 is left via output "Y", to proceed to block 31 where the flag F is tested (F=1). If this is not the case, the disc is a disc whose identification number has not been stored in the memory and—since the FTS key 20 has been actuated—which is to be stored as a preferred selection. For this purpose a waiting time is observed in block 32 while the keyboard and the store key 11 are scanned, to allow the user to key in the programme, and the sequence number to be assigned to the disc being displayed by the display 13. The last sequence number read (see block 20) is therefore incremented by one in block 32. After this, it is ascertained in block 34 whether programming has been effected, to proceed directly to block 26 if this should not be the case.

If the test F=1 in block 31 is found to be true (output Y), the disc is a disc whose preferred selections have been reprogrammed (in block 22). In accordance with block 351 the sequence number DN is the value stored in block 30, i.e. the value of the sequence number at the original location in the memory, after which the programme proceeds to output Y of block 34. At this point in the programme the address in the preferred-selection memory 6 is the next address after the last preferred-selection block and the values to be stored of the sequence number DN, the disc identification code and the preferred-selection programme MFT are known. For this storage the length of the new block is determined in block 35 and in block 36 it is ascertained whether the storage capacity is still sufficient for this block. If the storage capacity is still sufficient the programme proceeds to block 39 to store the values of IM, DN and MFT in the preferred-selection memory 6 and subsequently, the programme proceeds to block 26 in order to carry out the preferred programme indicated by means of the keyboard 1 or to remove the disc, or to carry out another programme which should not be stored in the preferred-selection memory. If block 36 shows that the storage capacity is not sufficient, the memory is re-organized in block 37 by shifting the preferred-selection blocks in such a way that invalidated blocks (see block 29) are overwritten. After this it is checked again in block 38 whether the storage capacity is sufficient. Should this not be the case the pilot lamp 12 is energized and in the other case the programme proceeds to block 39 to carry out the further programme already described.

Claims

1. An apparatus for reproducing information from a record carrier, which apparatus comprises read means for reading said record carrier, storage means for storing a preferred selection indicating a preferred part of the information recorded on the record carrier, means for controlling the read means in such a way that the preferred part indicated by the preferred selection stored can be reproduced, characterized by identification means for identifying a record carrier before it is played, write means for optionally writing into the storage means the identification (ID) found after loading of the record carrier together with a preferred selection (MTF) made via input means, and means for setting the control means in such a way that if the storage means contain an identification which corresponds to the identification of the record carrier to be played the corresponding preferred selection as stored in the storage means can be reproduced.

2. An apparatus as claimed in Claim 1, characterized in that the write means are adapted to

combine a code representing the identification and a code representing the preferred selection to blocks in the storage means, the read means being adapted to consecutively read said blocks in order to detect whether the identification of a record carrier to be played corresponds to the identification stored in the storage means.

3. An apparatus as claimed in Claim 2, characterized in that the write means are adapted to add to the blocks a sequence number (DN) and a code (L) which indicates a position of the next block, and the read means are adapted to determine the address of the next block as a function of the stored length of the block read.

4. An apparatus as claimed in Claim 3, characterized in that the apparatus comprises means for displaying the sequence number of the block which corresponds to a record carrier to be or being played.

5. An apparatus for reproducing information from a record carrier, which apparatus comprises read means for reading said record carrier, storage means for storing a preferred selection indicating a preferred part of the information recorded on the record carrier, means for controlling the read means in such a way that the preferred part indicated by the preferred selection stored can be reproduced, characterized in that the information is digital audio information encoded in accordance with the "compact-disc digital audio" standard, the identification means being adapted to receive the subcode for identifying the record carrier to be played by selecting predetermined bit groups from the subcode, in that the storage means are adapted for storing identifications (ID) of a plurality of record carriers and the corresponding preferred selections (MTF), the apparatus further being provided with means for setting the control means in such a way that if storage means contain an identification which corresponds to the identification of the record carrier to be played the corresponding preferred selection as stored in the storage means can be played.

Patentansprüche

1. Gerät zur Wiedergabe von Information eines Aufzeichnungsträgers, mit Lesemitteln zum Lesen des Aufzeichnungsträgers, mit Speichermitteln zum Speichern einer bevorzugten Auswahl, die einen bevorzugten Teil der auf dem Aufzeichnungsträger aufgezeichneten Information anzeigt, mit Mitteln zum derartigen Steuern der Lesemittel, daß der durch die bevorzugte gespeicherte Auswahl angezeigte Teil wiedergegeben werden kann, dadurch gekennzeichnet, daß Identifikationsmittel zum Identifizieren eines Aufzeichnungsträgers vor dem Abspielen, Schreibmittel zum wahlweise Schreiben der nach dem Laden des Aufzeichnungsträgers vorgefundenen Identifikation (ID) zusammen mit einer bevorzugten über Eingangsmittel getroffenen Auswahl (MTF) in die Speichermittel, und Mittel zum derartigen Einstellen der Steuermittel vorgesehen sind, daß beim Vorfinden einer Identifikation in den Speichermitteln, die der Identifikation des abzuspielenden Aufzeichnungsträgers entspricht, die betreffende bevorzugte und im Speichermittel gespeicherte Auswahl wiedergegeben werden kann.

2. Gerät nach Anspruch 1, dadurch gekennzeichnet, daß die Schreibmittel zum Kombinieren eines Codes als Darstellung der Identifikation und eines Codes als Darstellung der bevorzugten Auswahl zu Blöcken im Speichermittel dienen, wobei die Lesemittel zum aufeinanderfolgenden Lesen der Blöcke detektieren, ob die Identifikation eines abzuspielenden Aufzeichnungsträgers der im Speichermittel gespeicherten Identifikation entspricht.

3. Gerät nach Anspruch 2, dadurch gekennzeichnet, daß die Schreibmittel zum Bestücken der Blöcke mit einer Folgenummer (DN) und mit einem Code (L) dienen, der eine Position des folgenden Blocks angibt, und die Schreibmittel zum Bestimmen der Adresse des folgenden Blocks in Abhängigkeit von der gespeicherten Länge des gelesenen Blocks dienen.

4. Gerät nach Anspruch 3, dadurch gekennzeichnet, daß das Gerät Mittel zum Wiedergeben der Folgenummer des Blocks enthält, der einem abzuspielenden oder abspielenden Aufzeichnungsträger entspricht.

5. Gerät zur Wiedergabe von Information eines Aufzeichnungsträgers, mit Lesemitteln zum Lesen des Aufzeichnungsträgers, mit Speichermitteln zum Speichern einer bevorzugten Auswahl, die einen bevorzugten Teil der auf dem Aufzeichnungsträger aufgezeichneten Information anzeigt, mit Mitteln zum derartigen Steuern der Lesemittel, daß der durch die bevorzugte gespeicherte Auswahl angezeigte Teil wiedergegeben werden kann, dadurch gekennzeichnet, daß die Information digitale Audioinformation ist, die entsprechend der "Compact Disc Digital Audio" Norm codiert ist, wobei die Identifikationsmittel zum Empfangen des Untercodes zum Identifizieren des abzuspielenden Aufzeichnungsträgers vorgegebene Bitgruppen aus dem Untercode wählen, daß die Speichermittel Identifikationen (ID) einer Anzahl von Aufzeichnungsträgern und die entsprechende bevorzugte Auswahl (MTF) speichern, das Gerät weiter Mittel zum derartigen Einstellen der Steuermittel enthält, daß, wenn Speichermittel eine Identifikation enthalten, die der Identifikation des abzuspielenden Aufzeichnungsträgers entspricht, die entsprechende bevorzugte Auswahl, wie sie im Speichermittel gespeichert ist, abgespielt werden kann.

Revendications

1. Appareil pour reproduire de l'information d'un support d'information, comportant des moyens de lecture dudit support d'enregistrement, des moyens de mémorisation d'une sélection préférée indiquant une partie préférée de l'information enregistrée sur le support d'enregistrement, des moyens pour commander les

moyens de lecture de façon à permettre de reproduire la partie préférée indiquée par la sélection préférée stockée, caractérisé par des moyens d'identification pour identifier un support d'enregistrement avant sa lecture, des moyens d'écriture pour écrire éventuellement dans les moyens de mémorisation l'identification (ID) trouvée après la mise en place du support d'enregistrement, conjointement avec une sélection préférée (MTF) faite par l'intermédiaire de moyens d'entrée, et des moyens pour régler les moyens de commande de façon à permettre, si les moyens de mémorisation contiennent une identification correspondant à l'identification du support d'enregistrement à lire, de reproduire la sélection préférée correspondante telle que stockée dans les moyens de mémorisation.

2. Appareil selon la revendication 1, caractérisé en ce que les moyens d'écriture sont conçus pour combiner dans les moyens de stockage en blocs un code représentant l'identification et un code représentant la sélection préférée, les moyens de lecture étant conçus pour lire successivement lesdits blocs afin de détecter si l'identification d'un support d'enregistrement à lire correspond à l'identification stockée dans les moyens de mémorisation.

3. Appareil selon la revendication 2, caractérisé en ce que les moyens d'écriture sont conçus pour ajouter aux blocs un numéro d'ordre (DN) et un code (C) indiquant la position du bloc suivant, et en ce que les moyens de lecture sont conçus pour déterminer l'adresse du bloc suivant en fonction de la longueur stockée du bloc lu.

4. Appareil selon la revendication 3, caractérisé en ce qu'il comporte des moyens pour afficher le numéro d'ordre du bloc correspondant à un support d'enregistrement lu ou devant être lu.

5. Appareil de reproduction d'information d'un support d'enregistrement, comportant des moyens de lecture dudit support d'enregistrement, des moyens de mémorisation d'une sélection préférée indiquant une partie préférée de l'information enregistrée sur le support d'enregistrement, des moyens pour commander les moyens de lecture de façon à permettre de reproduire la partie préférée indiquée par la sélection préférée stockée, caractérisé en ce que l'information est de l'information audio numérique codée selon la norme dite "compact-disc digital audio", les moyens d'identification étant conçus pour recevoir le sous-code pour identifier le support d'enregistrement à lire par sélection prédéterminée de groupes de bits dans le sous-code, en ce que les moyens de mémorisation sont conçus pour stocker des identifications (ID) d'une pluralité de supports d'enregistrement et les sélections préférées correspondantes (MTF), l'appareil étant encore muni de moyens pour régler les moyens de commande de façon à permettre, si les moyens de mémorisation contiennent une identification correspondant à l'identification du support d'enregistrement devant être lu, de lire la sélection préférée correspondante telle que stockée dans les moyens de mémorisation.

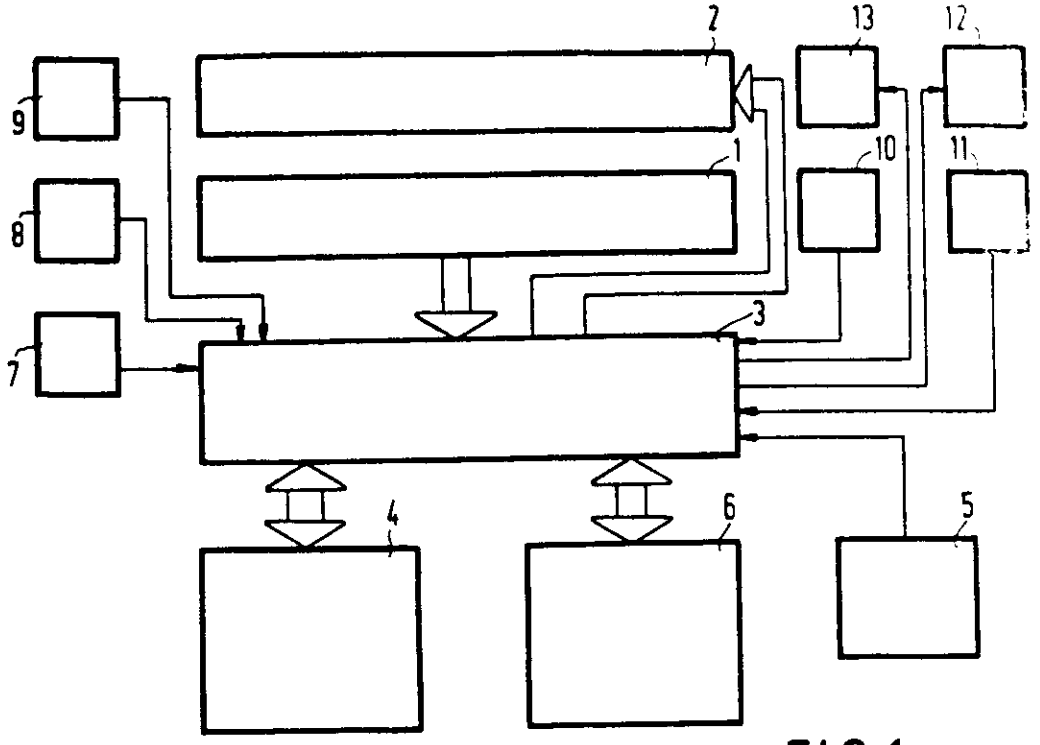

FIG.1

NO	MIN	sec	fr.'s
01	00	02	(32)
02	10	(15)	(12)
03			
04			
A0	01	00	00
A1	0(7)	00	00
A2	5(2)	(41)	(41)

ID = " 32-15-12-72-48-41"

FIG.2

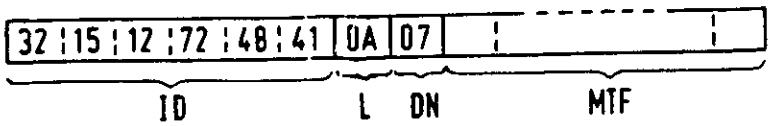

FIG.3

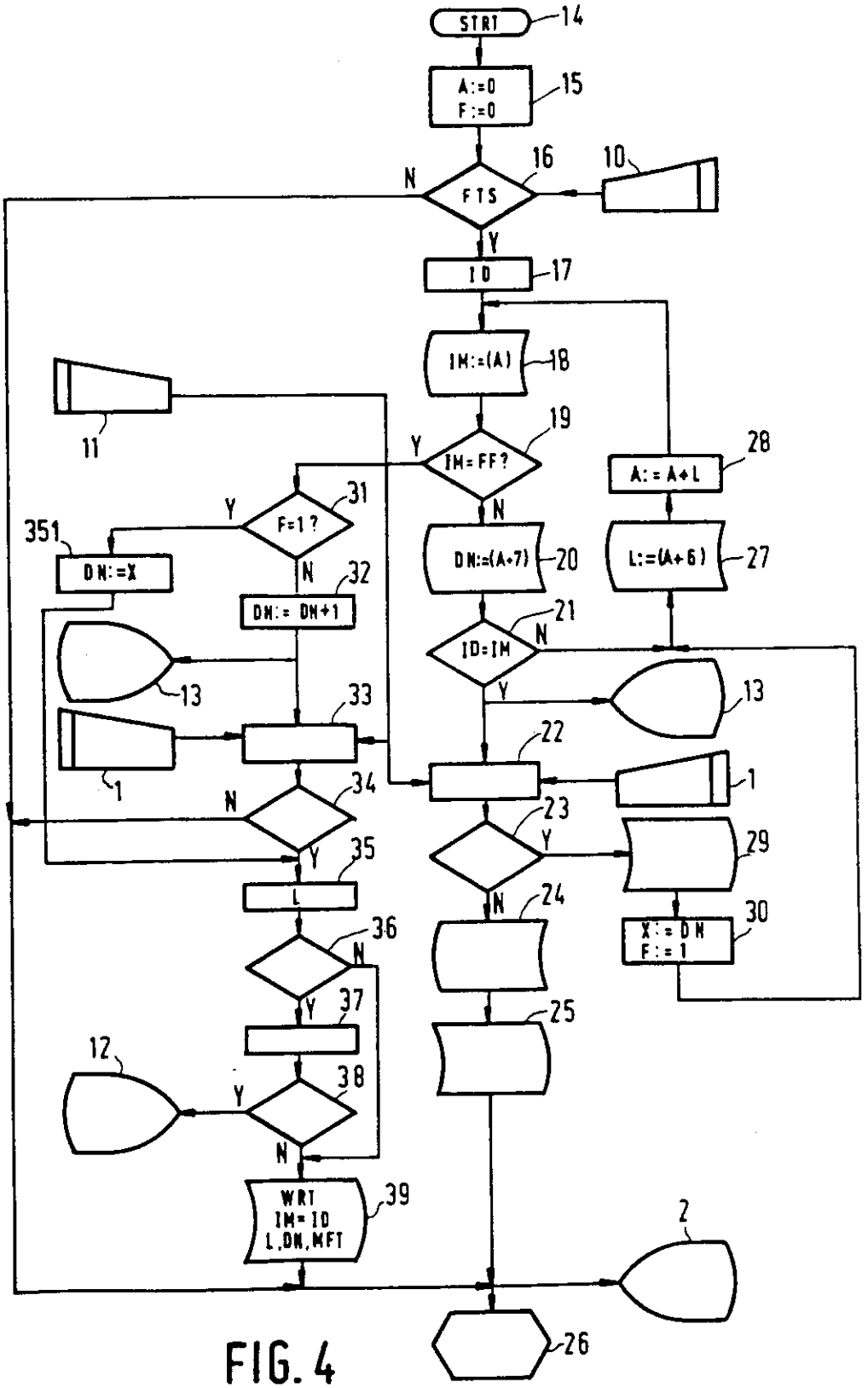
STRT
14
A:=0
F:=0
15
16
10
N
FTS
Y
ID
17
IM:=(A)
18
11
19
Y
IM=FF?
28
A:=A+L
31
Y
F=1?
351
DN:=X
N
32
DN:=DN+1
N
DN:=(A+7)
20
L:=(A+6)
27
21
ID=IM
N
13
Y
13
33
22
1
1
34
N
23
Y
29
Y
35
L
N
24
30
X:=DN
F:=1
36
N
Y
37
25
12
38
Y
N
WRT
IM=ID
L,DN,MFT
39
2
26

FIG. 4

REGISTER ENTRY FOR EP0169597

European Application No EP85201032.1 filing date 28.06.1985

Application in Dutch

Priority claimed:
02.07.1984 in Netherlands - doc: 8402095

Designated States BE DE FR GB IT SE AT

Title APPARATUS FOR REPRODUCING INFORMATION FROM A RECORD CARRIER

Applicant/Proprietor
N.V. PHILIPS' GLOEILAMPENFABRIEKEN, Groenewoudseweg 1, NL-5621 BA Eindhoven, Netherlands [ADP No. 50311273001]

Inventors
PIETER HENDRIK CUSTERS, c/o INT. OCTROOIBUREAU B.V. Prof. Holstlaan 6, NL-5656 AA Eindhoven, Netherlands [ADP No. 53837845001]

LUDOVICUS MARTINUS CORNELIS VERHULST, c/o INT. OCTROOIBUREAU B.V. Prof. Holstlaan 6, NL-5656 AA Eindhoven, Netherlands [ADP No. 53837852001]

Classified to
G5R
G11B G07F

Address for Service
R J BOXALL, Philips Elec, Philips House, 188 Tottenham Court Road, London, W1P 9LE, United Kingdom [ADP No. 05521273001]

EPO Representative
RUDOLF JOHANNES PETERS, INTERNATIONAAL OCTROOIBUREAU B.V. Prof. Holstlaan 6, NL-5656 AA Eindhoven, Netherlands [ADP No. 50079953001]

Publication No EP0169597 dated 29.01.1986
Publication in English

Examination requested 28.06.1985

Patent Granted with effect from 28.03.1990 (Section 25(1)) with title
APPARATUS FOR REPRODUCING INFORMATION FROM A RECORD CARRIER.

19.04.1990 R J BOXALL, Philips Elec, Philips House, 188 Tottenham Court Road, London, W1P 9LE, United Kingdom [ADP No. 05521273001]
registered as address for service
Entry Type 8.11 Staff ID. JM1 Auth ID. AA

**** END OF REGISTER ENTRY ****