Aug. 3, 1943. R. H. SWINGLE 2,325,717

CIRCUIT BREAKER

Filed Dec. 4, 1940 2 Sheets-Sheet 1

Fig. 1.

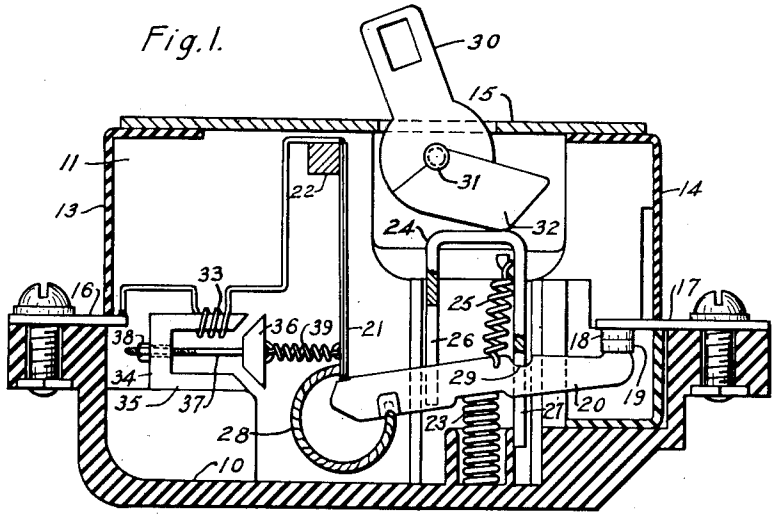

Fig. 2.

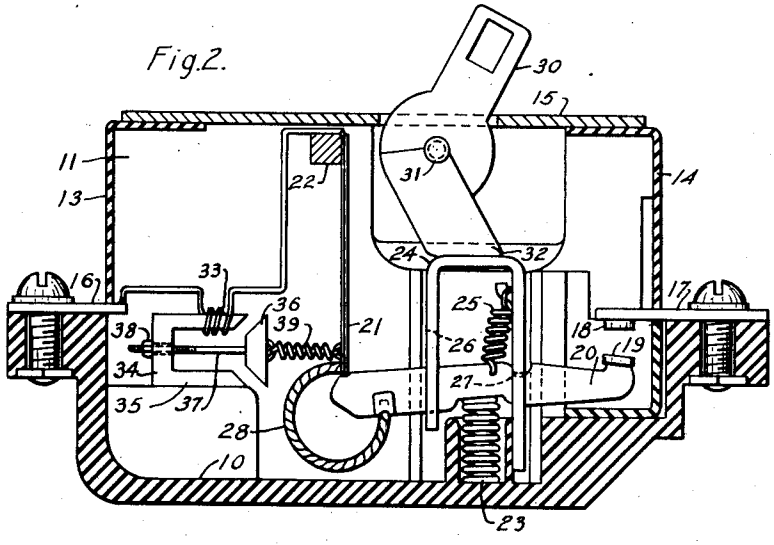

WITNESSES:

H. F. Susser

Paul O. Garber

INVENTOR

Ralph H. Swingle.

BY

F. W. Lyle

ATTORNEY

Aug. 3, 1943. R. H. SWINGLE 2,325,717

CIRCUIT BREAKER

Filed Dec. 4, 1940 2 Sheets-Sheet 2

Fig. 3.

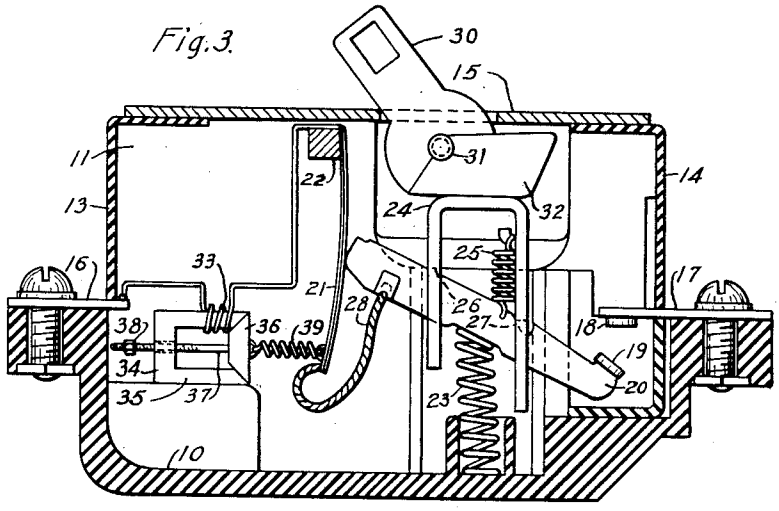

Fig. 4.

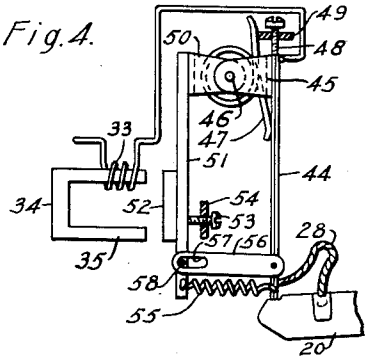

Fig. 5.

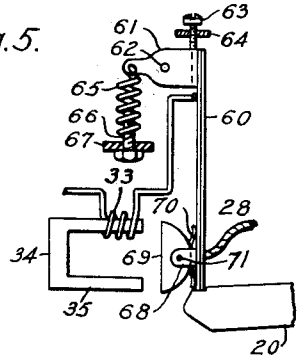

WITNESSES:

N. F. Susan

Ruth O'Harlow.

INVENTOR

Ralph H. Swingle.

BY

F. W. Lyle.

ATTORNEY

Patented Aug. 3, 1943

2,325,717

UNITED STATES PATENT OFFICE

2,325,717

CIRCUIT BREAKER

Ralph H. Swingle, Pittsburgh, Pa., assignor to Westinghouse Electric & Manufacturing Company, East Pittsburgh, Pa., a corporation of Pennsylvania

Application December 4, 1940, Serial No. 368,470

23 Claims. (Cl. 200—88)

This invention relates to circuit breakers and more particularly relates to circuit breakers of the type which are instantaneously operated on overloads above a predetermined magnitude and after a time delay on persistent overloads of a lesser magnitude.

Heretofore, circuit breakers have been provided with magnetic trips which operate automatically to instantaneously trip the breaker on heavy overloads above a predetermined value or on short circuits. It has not been possible to adjust the magnetic trip devices so that they become effective to operate the breaker at current values within the range of say, between three times normal and ten times the normal current value for which the breaker is rated. The reason for this is due to the fact that the breaker must not operate to interrupt the circuit under overload conditions such as are occasioned by cutting in tungsten lamp loads which may overload the circuit during the first half cycle, approximately eight or nine times normal current value.

It is, therefore, an object of the instant invention to provide a circuit breaker having a combined or cooperative thermal and magnetic trip device in which the tripping point of the magnetic tripping means varies with the value and duration of the current.

Another object is the provision of a circuit breaker having a magnetic trip device wherein the tripping point of the magnet is varied on the intermediate range of overload currents by a thermally responsive element.

Another object of the invention is to provide a circuit breaker having an electromagnetic trip device in which the biasing force which opposes attraction of the armature of the electromagnetic trip device is varied in accordance with the magnitude and duration of the overload.

Another object of the instant invention is to provide a circuit breaker with a thermal and magnetic trip device in which the thermal trip device influences the magnetic trip device whereby the magnet trips the breaker at lower overload values under the influence of the thermal device.

A further object of the invention is to provide a circuit breaker with a combined thermal and magnetic trip in which a spring intermediate the magnet armature and the thermal element biases the armature against the normal magnetic influence of the magnet, and the thermal element flexes when heated by overload currents to reduce the biasing force exerted on the armature to cause the magnet to trip at a lower current value.

An additional object of the invention is to provide a circuit breaker having a pivotally mounted bimetallic element which is movable magnetically to trip the breaker without a large bending stress being applied to the bimetallic element.

It is also an object of the invention to provide a circuit breaker having a bimetallic element with an armature pivotally mounted on the movable end thereof to move up to and engage the pole faces of a tripping magnet without bending the bimetallic element to take a slight S-shape, in which shape the bimetallic element might take some permanent set and thus have its accuracy of calibration impaired.

The novel features that are considered characteristic of the invention are set forth in particular in the appended claims. The invention itself, however, both as to structure and operation, together with additional objects and advantages thereof, will be best understood from the following detailed description thereof when read in conjunction with the accompanying drawings, in which:

Figure 1 is a sectional view showing the breaker in closed-circuit position;

Fig. 2 is a sectional view showing the breaker mechanism operated manually to open-circuit position;

Fig. 3 is a sectional view showing the breaker opened automatically by the tripping device; and

Figs. 4 and 5 are detailed views illustrating modifications of the tripping mechanism.

Described in general terms, the embodiment of the invention shown in Fig. 1 includes a releasable operating mechanism for automatically opening contacts in the circuit controlled by the breaker. A movable contact is normally restrained in closed-circuit position against the influence of an operating spring by a latch mechanism under the control of a thermal and magnetic trip device. A tension spring connects the free end of the thermal member to the movable armature. The armature and the magnet coil are connected in series relation in the circuit to be controlled by the breaker. When the thermal element is heated under the influence of an abnormal current, it flexes in a direction to reduce the force exerted by the spring which biases the armature against the magnetic attraction. The result of this construction is that the point at which the armature will be attracted to trip the breaker will vary with the extent of the deflection of the thermal

element. When the point is reached at which the magnetic force overcomes the bias of the armature, the magnet attracts the armature, which, by virtue of its movement, increases the tension of the spring which then causes the thermal element to flex a greater distance for a predetermined degree of heating and, therefore, more quickly trips the breaker.

The circuit breaker includes a base 10 of insulating material and is provided with side walls 11 (only one of which is shown), end walls 13 and 14, and a cover plate 15. A pair of terminals 16 and 17 is provided, one being disposed at each end of the closure, the terminals projecting through the end walls 13 and 14 into the interior of the closure. A stationary contact 18, mounted on the inner end of the terminal 17, cooperates with a movable contact 19 carried on one end of a floating contact bar 20 to open and close the circuit. The other end of the contact bar 20 cooperates with the free end of a bimetallic member 21 secured to a bar 22 mounted on the side walls 11 of the closure, the member 21 acting as a latch to restrain the contact bar in closed-circuit position against the tension of an operating spring 23. The spring 23 is compressed between the lower edge of the contact bar 20 intermediate its ends and the base 10 and normally biases the contact bar 20 in a counter-clockwise direction about its point of contact with the bimetal 21 as a pivot.

A U-shaped member 24 disposed for reciprocatory movement in guides within the closure is provided with slots 26 and 27 which embrace and guide the floating bar 20. A spring 25 tensioned between a projection on the member 24 and the bar 20 presses these parts into cooperative relation.

When the bimetal 21 flexes under the influence of a persistent light overload, or when it is operated magnetically by a sudden heavy overload (as will be later described) it frees the contact bar 20 and the operating spring 23 immediately rocks this bar clockwise about its pivot point, the point of contact indicated at 29 with the member 24, carrying the contact 19 away from the contact 18 to open the circuit (see Fig. 3).

In order to reset the breaker after it has been automatically tripped, there is provided a manually operable handle 30 mounted on a pivot 31 extending between and supported by the side walls 11. Operation of this handle in a clockwise direction presses the member 24 inwardly by the camming action of an extension 32 of the handle on the outer end of the member 24. This movement permits the bimetal 21 to relatch the bar 20, so that, upon counterclockwise rotation of handle 30, the spring 23 presses the bar 20 outwardly to bring the contacts 18—19 into closed-circuit position.

The contact bar 20 may be tripped by the thermal element 21 alone on persistent overloads below a predetermined magnitude, by magnetic means on overloads above a predetermined magnitude or short circuits, or by combined magnetic means and thermal means on intermediate overloads. The thermal or bimetal element 21 is electrically connected in series with the coil 33 of a magnet indicated generally at 34 and the contacts 18—19, all of which elements are connected in series in the circuit controlled by the breaker. The circuit extends as follows: Terminal 16, coil 33 of the magnet, bimetal element 21, a flexible shunt conductor 28, contact bar 20, contacts 19 and 18 to the terminal 17.

The coil 33 is wound on a U-shaped core 35 having its ends shaped to conform to an armature 36 having beveled ends. The armature 36 is mounted on one end of a non-magnetic rod 37 slidable longitudinally through an opening in the core 35. A nut 38 is provided on the rod 37 to limit the outward movement of the armature and to serve as a convenient means of adjusting the tension of a spring 39, having one end connected to the armature 36 and the other end connected to the bimetal element 21.

As set forth above, the bimetal element 21 assisted by the tension of the spring 39 flexes in the usual manner when heated in response to persistent overloads below a predetermined magnitude to trip the breaker. This provides a time delay during which the abnormal condition in the circuit may return to normal without tripping the breaker. On sudden overloads above said predetermined magnitude, the magnet 34 has sufficient energy to attract the armature 36. This suddenly increases the tension of the spring 39 and flexes the bimetal 21 an extent sufficient to trip the breaker.

An important feature of the instant invention is that the design of the parts is such as to provide a long time delay on small overloads, an instantaneous trip on heavy overloads or short circuits and, in addition, provides a quicker trip on intermediate overloads, say from approximately 300% to 1000% of the normal current value, than has heretofore been possible.

This result is effected by the combined action of the magnet 34, the spring 39 and the bimetal element 21. The magnet 34 is so designed that it will not, of its own force, trip the breaker except on overloads of a magnitude above approximately 1000% of normal. The bimetal 21, unassisted, give a desirable long time delay before tripping the mechanism on overloads up to about 300% of normal, permitting such abnormal circuit conditions to correct themselves without tripping the breaker. This time delay, however, when the current value is in the intermediate range of overloads, is undesirable since the heavier overloads, if permitted to continue, would cause damage to the circuit and/or translating devices connected thereto. Under such circumstances, as the bimetal 21 is heated, it flexes toward the armature 36, thus reducing the force exerted by the spring opposing the attraction of the magnet for the armature. The current value at which the armature will be attracted will, therefore, decrease in accordance with the extent of deflection of the bimetal. When the point is reached at which the pull of the magnet 34 overcomes the gradually decreasing tension of the spring 39, the magnet attracts the armature 36, increasing the tension of the spring 39, thus increasing its biasing force on the bimetal 21. This causes an increase in the rate and extent of deflection of the bimetal and, therefore, trips the breaker more quickly for a given amount of heating, or for an overload current of predetermined value and duration.

Fig. 4 illustrates a modification of the structure shown in Figs. 1, 2 and 3 wherein a positive instantaneous trip is effected upon the occasion of an overload in excess of approximately 10 times normal current value. In this modification a bimetal trip member 44 is carried by a yoke 45 having its arms pivotally supported in the housing of the circuit breaker on a pivot 46. The bimetal 44 is biased to latching position by a spring 47 against an adjusting screw 48

mounted in a cross bar 49. Also mounted on the pivot 46 by means of a yoke 50 is an arm 51 upon which is mounted an armature 52. The arm 51 and armature 52 are biased to unattracted position against an adjusting screw 53 in a cross bar 54 by a spring 55 having one of its ends anchored to the arm 51 and the other end connected to the bimetal element 44. The adjusting screw 48 determines the normal position of the bimetallic element 44 and the amount of overlap between its lower end and the releasable element 20, so that the screw 48 may be used to determine the thermal tripping point of the breaker on low overloads. The adjusting screw 53 determines the normal position of the arm 51 and the size of the air gap between the armature 52 and the poles of the magnet 34, so that the screw 53 may be used to determine the magnetic tripping point of the breaker on sudden heavy overloads. A link 56 pivotally connected to the bimetal 44 is provided with a lost motion connection with the arm 51 in the form of a slot 57 through which projects a stud 58 in the arm 51. The spring 55 is of such strength that it does not overcome the spring 47 and does not rotate the bimetal 44 to release the contact controlling element 20 under normal conditions.

When a heavy overload current above a predetermined value or a short circuit occurs, the magnet 34 attracts its armature 52, rocking the arm 51 and, by means of the link 56, the bimetal element 44 about their common pivot 46 against the tension of the spring 47 to instantaneously release the contact bar 20. The pivotal mounting of the bimetallic element has the advantage that it is not necessary for the magnetic trip to flex the bimetallic element. The spring 47 may be made relatively weak and permit rotation of the bimetallic element 44 about the pivot 46 to disengage the contact opening member 20 with only a small force exerted by the magnet 34 which is not sufficient to substantially flex the bimetallic element itself. This permits a small and inexpensive magnet 34 to be used. The fact that the bimetallic element is not substantially flexed on magnetic tripping has the additional advantage that the bimetal is protected against being stressed beyond its elastic limit when heated. This prevents the bimetal from being given a permanent set in bent position, and preserves the accuracy of calibration of the circuit breaker.

On the occurrence of a prolonged overload of low magnitude, for instance, up to about 300% of normal, the bimetal, heated in response to the current, flexes to trip the contact bar 20. On such overloads, the pull of the magnet 34 is negligible and the bimetal, acting alone, provides a convenient time delay during which the current conditions may be corrected without tripping the breaker.

On overload currents of an intermediate order, between about 300% and 1000% of normal, the force of the magnet 34 is greater but not sufficient to overcome the tension of the spring 47. Upon the occurrence of such an overload, the bimetal is heated and flexes in unlatching direction. This reduces the force exerted by the spring 55 on the arm 51. During this flexing, the link 56 slides over the stud 58, the spring 55 maintaining the arm 51 biased against the screw 53 until the point is reached at which the magnet 34 overcomes the reduced tension of the spring 55 and attracts its armature 52. At this movement of the armature, the stud 58 strikes the end of the slot 57, rotating the arm 51, link 56 and bimetal 44 clockwise as a unit about the pivot 46 to trip the breaker.

It can be seen that under the condition just described, the bimetal 44 assisted by the magnet 34 will trip the breaker quicker for a given current, or amount of heating of the bimetal, than would the bimetal acting alone.

In the modification of the invention shown in Fig. 5, a bimetal element 60 is pivotally mounted by means of a yoke 61 on a pivot 62, and is biased against an adjustable stop screw 63, in a cross bar 64, by a spring 65 having one of its ends connected to an arm of the yoke and the other end connected to an adjusting screw 66 mounted in a member 67.

The pivotal mounting of the bimetallic element has the same advantages as the corresponding feature of the modification shown in Fig. 4, as described above. In the modification of Fig. 5, the adjusting screw 63 not only determines the calibration of the thermal element by fixing the amount of latch overlap between the bimetal element and the lower end of the contact controlling arm 20, but also varies the air gap of the magnet at the same time. The tripping point of the magnet on heavy overloads or short circuits is adjustable independently of the amount of overlap between the bimetal and the contact controlling arm because the screw 66, which threadedly engages the turns of the spring 65, may be adjusted to vary the spring force which must be overcome to trip the breaker magnetically.

The bimetal 60 is provided with ears 68 (only one being shown) suitably secured thereto. An armature 69 is mounted on a pivot 71 extending between the ears 68 and is biased to a central position with its face parallel to the faces of the magnet poles, by a leaf spring 70. The pivotal mounting of the armature 69 makes it unnecessary for the bimetal to flex into a slightly S-shape as would be the case if the armature were fixedly mounted on the bimetal.

On a sudden heavy overload of more than 10 times normal current, the magnet 34 is effective immediately to attract the armature 69 rotating the bimetal 60 clockwise about its pivot 62 to instantaneously trip the contact bar 20 without substantially bending the bimetallic element. On overload currents of a value up to about 3 times normal, the bimetal becomes heated by the current traversing it and its free end flexes toward the left, without being materially affected by the magnet, to trip the contact bar after a time delay. In the intermediate range of overload currents, the bimetal, deflecting in response to the current flowing therethrough, reduces the air gap to a point where the magnet 34 attracts the armature 69 and rotates the bimetal 60 about its pivot 62 to trip the breaker. The magnet 34 on such intermediate overloads has a much greater pull than on low magnitude overloads but not sufficient to overcome the tension of the spring 65 until the air gap is reduced.

When tripped automatically by either of the modified trip devices, the breaker may be manually reset in the manner described above in referring to Figs. 1, 2 and 3. The magnet 34 and the contact bar 20 illustrated in the modifications of Figs. 4 and 5 are substantially the same as the corresponding parts in Fig. 1 and have, therefore, been given corresponding reference characters.

The terms "low," "intermediate" and "high" in the foregoing specification are used to describe

relative current values which are in general as follows: The term "low" refers to overload currents between normal and approximately 300% of normal. "Intermediate" refers to an overload of approximately 300% to 1000% of normal, and "high" means an overload above 1000% of normal or a short circuit.

The figures given are arbitrary as it is obvious that calibration and/or adjustments of the parts may be made to change the above current ranges so that the bimetal element, unassisted, would trip the breaker at, for instance, between normal and 400% of normal, the bimetal element assisted by the magnet would trip the breaker between 400% of normal and 1200% of normal current value, and the magnet unassisted would trip the breaker on currents above 1200% of normal. It is, therefore, not intended to limit the scope of the invention to the values set forth. Rather it is intended to indicate three ranges of abnormal current values, in each of which ranges the breaker is tripped by different combinations of elements, the limits of which ranges may be varied by design calibration and/or adjustments of the parts, all coming within the spirit of the invention.

While the invention has been disclosed in accordance with the provisions of the patent statutes, it is to be understood that various changes in the structural details thereof may be made without departing from some of the essential features of the invention. It is desired, therefore, that the language of the appended claims be given the broadest reasonable interpretation permissible in the light of the prior art.

I claim as my invention:

1. In a circuit breaker, the combination of an operating mechanism for the breaker, a thermal latch operable when heated a predetermined amount to initiate movement of the operating mechanism, electromagnetic means including an armature operable in response to overload currents above a predetermined value for operating said thermal latch to initiate movement of the operating mechanism, said armature and said thermal latch being mounted to permit relative movement therebetween, and a spring other than said thermal latch opposing said operation of the electromagnetic means, said thermal latch being cooperatively connected to said electromagnetic means to vary its operating point upon movement of the thermal latch.

2. In a circuit breaker, the combination of an operating mechanism for the breaker, a thermal latch operable when heated a predetermined amount to cause actuation of the operating mechanism, electromagnetic means including an armature operable on overload currents above a predetermined value for operating the thermal latch to actuate the operating mechanism, said armature and said thermal latch being mounted to permit relative movement therebetween, and a spring other than said thermal latch opposing movement of said armature, said thermal latch being operable to vary the operating point of the armature.

3. In a circuit breaker, the combination of an operating mechanism for the breaker, a bimetal latch element operable when heated a predetermined amount to actuate the operating mechanism, magnetic means operable in response to overload currents above a predetermined value for operating the bimetal latch element to actuate the operating mechanism, and means operable by movement of said bimetal latch element for varying the operating point of the magnet means while said magnetic means remains stationary.

4. In a circuit breaker, the combination of an operating mechanism for causing automatic operation of the breaker, a thermally responsive element operable when heated in response to overload currents below a predetermined value to actuate the operating mechanism, a spring biasing the thermally responsive element toward actuated position, and magnetic means operable on overloads above the predetermined value for increasing the bias of the spring to cause the thermally responsive element to actuate the operating mechanism.

5. In a circuit breaker, the combination of releasable operating mechanism for causing automatic operation of the breaker, thermally responsive restraining means operable when heated a predetermined amount to release the operating mechanism, an electromagnet including an armature, resilient means intermediate the restraining means and the armature biasing the restraining means in releasing direction, said magnet being operable in response to overload currents above a predetermined value to increase the biasing force of the resilient means and cause the restraining means to release the operating mechanism whether said restraining means is heated or not.

6. In a circuit breaker, the combination of releasable operating mechanism for causing automatic operation of the breaker, a bimetal latch operable when heated a predetermined amount to release the operating mechanism, an electromagnet including an armature, and a spring intermediate the bimetal latch and the armature biasing the bimetal latch in releasing direction, the magnet being responsive on overload currents above a predetermined value to attract the armature and move the bimetal latch to cause release of the operating mechanism.

7. In a circuit breaker, the combination of releasable operating mechanism for causing automatic operation of the breaker, a thermal latch for restraining the operating mechanism and operable when heated a predetermined amount to release the operating mechanism, magnetic means including an armature operable on overloads above a predetermined value to operate said thermal latch to release the operating mechanism, and resilient means other than said thermal latch biasing the armature against attraction, the thermal latch being responsive to overload currents to reduce the force of said resilient biasing means to permit the magnet to attract the armature and release the operating mechanism.

8. In a circuit breaker, the combination of an operating mechanism for the breaker, a bimetal latch element operable when heated by overload currents of relatively low value to actuate the operating mechanism after a time delay, a magnet having an armature, said magnet being responsive to overload currents above a predetermined value to substantially instantaneously attract the armature and operate said bimetal latch to thereby cause actuation of the operating mechanism, a spring other than said bimetal latch element biasing the armature against attraction, the bimetal latch element being responsive when heated by overload currents in an intermediate range below said predetermined value to decrease the force exerted by the spring and permit

attraction of the armature at a lower current than if the bimetal were not heated.

9. In a circuit breaker, the combination of an operating mechanism for the breaker, a pivoted thermally responsive latch operable after a time delay when heated by overload currents to actuate the operating mechanism, and a magnet having an armature connected to the latch but movable relative to the latch, the connection being such that when the armature is attracted by the magnet in response to overload currents above a predetermined value the armature rotates the thermally responsive latch about its pivot to substantially instantaneously actuate the operating mechanism.

10. In a circuit breaker, the combination of an operating mechanism for the breaker, a time delay thermal latch operable when heated a predetermined amount to actuate the operating mechanism, an electromagnet having an armature biased against attraction, and a connection between the latch and the armature, said connection being such as to permit movement of the latch without displacing the armature but which upon attraction of the armature in response to overloads above a predetermined amount causes operation of the latch to quickly release the operating mechanism.

11. In a circuit breaker, the combination of releasable operating mechanism for causing automatic operation of the circuit breaker, a thermal latch responsive when heated a predetermined amount to release the operating mechanism, an electromagnet having an armature mounted to permit movement of said latch relative thereto and biased against attraction, and a connection between the armature and the thermal latch, the connection being such that attraction of the armature in response to overload currents above a predetermined value causes instantaneous operation of the thermal latch but which connection permits the thermal latch when heated in response to overload currents below the predetermined value to reduce the bias on the armature to a point where the magnet attracts said armature and operates the thermal latch.

12. In a circuit breaker, the combination of an operating mechanism for the breaker, a pivoted bimetal latch responsive when heated a predetermined amount to actuate the operating mechanism, said latch being biased against rotation on its pivot, an electromagnet having a pivoted armature operatively connected to the latch, said magnet being responsive to overload currents above a predetermined value to attract the armature and cause rotation of the latch on its pivot to substantially instantaneously actuate the operating mechanism, and biasing means controlled by the latch to control the operating point of the magnet.

13. In a circuit breaker, the combination of releasable operating mechanism for causing automatic operation of the breaker, a pivoted thermal element responsive when heated a predetermined amount to release the operating mechanism, an electromagnet having a pivoted armature, a connection between the armature and the thermal element for causing unitary movement of the armature and the thermal element in releasing direction and permitting independent movement of the thermal element in releasing direction, the magnet being responsive to overload currents above a predetermined value to operate the armature and the thermal element to substantially instantaneously release the operating mechanism, and biasing means for biasing the armature against attraction, said biasing means being controllable by the thermal element when said element is heated in response to currents in the intermediate range of values of overload currents below the predetermined value for reducing the bias on the armature to a point where the magnet will attract the armature.

14. In a circuit breaker, the combination of operating mechanism for the breaker, a time delay device comprising a pivoted thermal element responsive when heated a predetermined amount to flex in a direction to trip the operating mechanism, an armature associated with the thermal element, means biasing said armature against attraction, and magnetic means responsive to overload currents above a predetermined value to attract the armature and rotate the thermal element on its pivot to substantially instantaneously release the operating mechanism, said thermal element acting when heated to reduce the biasing force of said biasing means.

15. In a circuit breaker, the combination of releasable operating mechanism for causing automatic operation of the circuit breaker, a pivoted thermal element responsive when heated a predetermined amount to release the operating mechanism, magnetic means operable in response to overload currents above a predetermined value to rotate the thermal element about its pivot to substantially instantaneously release the operating mechanism, and means biasing the magnetic means against operation, said thermal element acting to vary the biasing force of said biasing means.

16. In a circuit breaker, the combination of an operating mechanism for the breaker, a pivoted thermal element responsive when heated a predetermined amount to actuate the operating mechanism, magnetic means responsive to overload currents above a predetermined value to rotate the thermal element to substantially instantaneously actuate the operating mechanism, means biasing the magnetic means against operation, the thermal element being responsive when heated by overload currents in the intermediate range below said predetermined value to reduce the bias on the magnetic means to a point where said magnetic means will function to rotate the thermal element.

17. In a circuit breaker, the combination of an operating mechanism for the breaker, a pivoted bimetal element biased against rotation, said element flexing when heated a predetermined amount to actuate the operating mechanism, an armature pivotally carried by the bimetal element, and electromagnetic means responsive to overload currents above a predetermined value to attract said armature and rotate the bimetal element to substantially instantaneously actuate the operating mechanism without overstressing the bimetal element, the bimetal element flexing in response to overload currents below the predetermined value to reduce the air gap of the magnetic means to a point where the magnetic means will act to rotate the bimetal element.

18. In a circuit breaker, the combination with an operating mechanism for the breaker of a bimetal element responsive when heated a predetermined amount to move at one end and actuate the operating mechanism, and magnetic means responsive to overload currents above a

predetermined value to move said end of the bimetal element in the same direction as when heated to thereby substantially instantaneously actuate the operating mechanism, said magnetic means including an armature mounted on the bimetal element for movement relative thereto.

19. In a circuit breaker, the combination with releasable operating mechanisms for causing automatic operation of the breaker, a latch comprising a pivotally supported bimetal element responsive when heated a predetermined amount to release the operating mechanism, an armature pivotally carried on the latch, and an electromagnet responsive to overload currents above a predetermined value to attract the armature and move the latch about its pivot to release the operating mechanism.

20. In a circuit breaker, the combination of operating mechanism for the breaker, a latch comprising a pivoted bimetal element responsive when heated a predetermined amount to actuate the operating mechanism, said latch being biased against rotation in actuating direction, an armature pivotally mounted on the latch, and an electromagnet responsive to overload currents above a predetermined value to rotate the latch on its pivot to actuate the operating mechanism, said latch flexing when heated by a current of less than the predetermined value to reduce the air gap of the magnet to a point where the magnet will overcome the bias and operate the latch.

21. A circuit breaker comprising relatively movable contacts, operating means including a member releasable to cause automatic opening of the contacts, a thermal latch operable when heated a predetermined amount to release said member, an electromagnet having an armature movable to effect release of the releasable member, said thermal latch being operable when heated in response to the current of the circuit to vary the effective pull of the magnet while the electromagnet and armature remain stationary.

22. In a circuit breaker, the combination of operating means for the breaker, a time delay device comprising a thermal element operable when heated a predetermined amount to actuate the operating means, an armature connected to the thermal element and movable relative thereto, and electromagnetic means responsive to overload currents above a predetermined value to attract the armature and operate the thermal element to substantially instantaneously actuate the operating means.

23. A circuit breaker comprising relatively movable contacts, operating means therefor, a bimetal element operable when heated a predetermined amount to actuate the operating means, an electromagnet including a magnet core, an armature cooperatively connected to the bimetal element and movable relatively thereto, said electromagnet being operable in response to overload currents above a predetermined value to instantaneously operate the bimetal element, said cooperative connection being such as to permit the armature to engage the magnet core without causing the bimetal element to take a permanent set.

RALPH H. SWINGLE.