2 Sheets—Sheet 1.

W. HANDY.

Ink-Feeding Device for Paper-Ruling Machines.

No. 208,592. **Patented Oct. 1, 1878.**

Fig; 1.

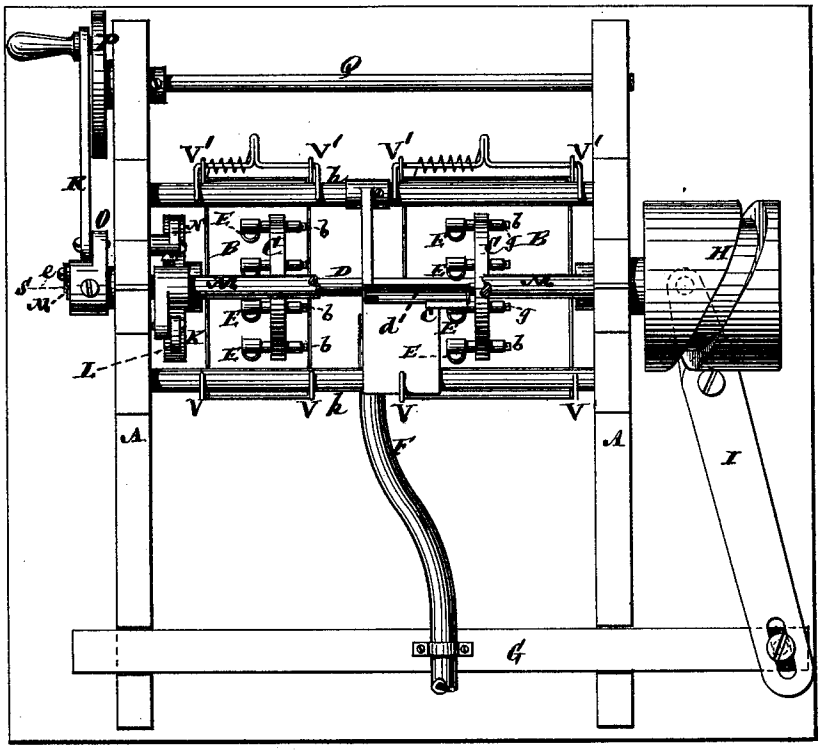

Fig; 2.

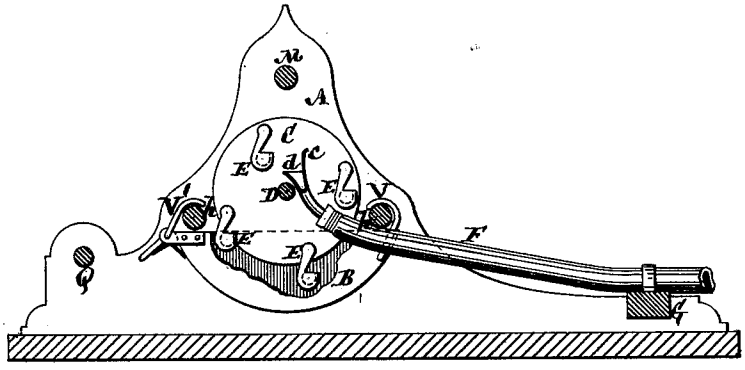

Witnesses,
Fred. Haynes
L. Allen

Inventor,
William Handy
by his Attorneys
Brown & Allen

N. PETERS, PHOTO-LITHOGRAPHER, WASHINGTON, D. C.

2 Sheets—Sheet 2.

W. HANDY.

Ink-Feeding Device for Paper-Ruling Machines.

No. 208,592. **Patented Oct. 1, 1878.**

Fig; 3.

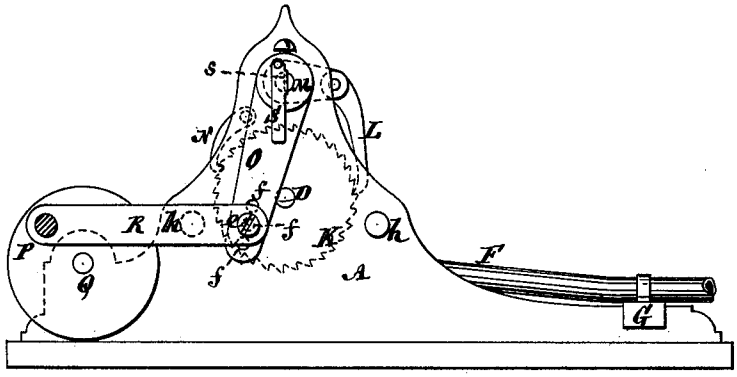

Fig; 4.

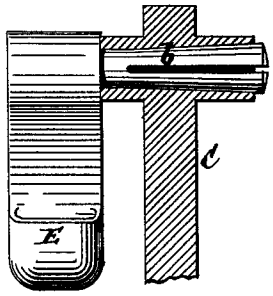

Witnesses,
Fred. Haynes
S. Allen

Inventor,
William Handy
by his Attorneys
Brown & Allen

N. PETERS, PHOTO-LITHOGRAPHER, WASHINGTON, D. C.

UNITED STATES PATENT OFFICE.

WILLIAM HANDY, OF BROOKLYN, NEW YORK.

IMPROVEMENT IN INK-FEEDING DEVICES FOR PAPER-RULING MACHINES.

Specification forming part of Letters Patent No. **208,592**, dated October 1, 1878; application filed April 23, 1878.

To all whom it may concern:

Be it known that I, WILLIAM HANDY, of the city of Brooklyn, in the county of Kings and State of New York, have invented certain new and useful Improvements in Ink-Feeding Devices for Paper-Ruling Machines, of which the following is a full, clear, and exact description, reference being had to the accompanying drawing, which forms part of this specification.

In paper-ruling machines it frequently occurs, when the machine is stopped for a longer or shorter interval, that the pens become surcharged with ink from the cloth or means used to distribute the ink to the pens, so that before starting again on the paper to be ruled it is a common practice to work off the surplus ink on the pens by running a waste sheet forward and backward through the machine, in order that good work may afterward be done. This involves not only loss of time, but also waste of material and wear and tear of the machine.

My invention obviates this defect, without being dependent upon the attention of the operator, or of removing the pens from contact with the distributing-cloth; and consists in a combination, with the reservoir or fountain, which contains the ink, and a conductor, duct, or tube, which conveys the ink therefrom to the cloth that serves as a distributer to the pens, of a bucket wheel or carrier, positively driven by the paper-ruling machine or shaft, having motion only when the machine is at work, for supplying the conductor with ink to the distributing-cloth or means when the machine is at work, and for arresting such supply when the machine is stopped.

The invention also consists in a certain construction of the bucket wheel or carrier and devices operating the same, for conveying the ink from the reservoir or fountain to the conductor, which passes it to the ruling-pens, or to the distributer which supplies said pens, and for varying the action of the bucket wheel or carrier which conveys the ink from the fountain to the conductor to suit different requirements.

In the accompanying drawing, Figure 1 represents a plan of certain devices used to illustrate my invention for supplying the pens of ruling-machines with ink, showing only two of a series of different-colored ink wells or fountains, in line with one another. Fig. 2 is a transverse vertical section of the same, and Fig. 3 a side view thereof. Fig. 4 is a view of one of a series of buckets attached to a revolving carrier, for conveying ink from the well or fountain to a trough and tube, which supplies the cloth or sponge that distributes the ink to the pen or pens, said view showing, upon a larger scale, a certain mode of attaching the buckets to their carrier, to provide for their ready detachment therefrom when required.

A A are the side or end frames of the ink-feeding devices of a paper-ruling machine, and B B, two fountains, wells, or reservoirs for containing different-colored inks. As each of these fountains and the devices connected with them are of similar construction, a description of either will apply to both.

Each fountain B has arranged to rotate within it a bucket-carrier, C, fast upon a horizontal shaft, D, that has its bearings in the side or end frames A A. Said carrier has a series of buckets, E, which are free to swing on or by horizontal pivots *b*, connected with the carrier, in order that, as the shaft D is rotated, the pendent buckets E will dip into and take up a certain quantity of ink, and as by the rotation of their carrier they pass over a trip, *c*, will deposit the ink contained in them within a trough, *d*, from whence the ink so raised and deposited is conveyed by a tube, F, to the cloth which distributes the ink to the pen or pens. This trough and tube constitute a duct or conductor for the ink from the fountain or reservoir, as taken up by the bucket-carrier, to the pen or pens, or to the distributing-cloth, or means which supply the latter.

The tube F, it is preferable, should be a flexible one, and its delivery end may be carried by a reciprocating bar or frame, G, to secure the more perfect or general distribution of the ink conveyed by it over the cloth from which the pens are supplied. Such vibrating or reciprocating movement of the tube F is more particularly serviceable when several pens are to be supplied from the same fountain, and may be effected by a grooved cam, H, on the shaft D, and a lever, I, actuated by said cam and connected with the bar G. It is proposed

to attach the tubes F to the reciprocating bar or frame G by means of adjustable stops, whereby the position of any one or more of said tubes on the bar may be varied to adapt the distribution of the ink to certain only of the pens in any particular series of pens.

The shaft D has an intermittent rotary motion, and is driven, through a ratchet-wheel, K, on it, by a pawl, L, which is carried by an oscillating shaft, M, a stop-pawl, N, serving to prevent back movement of the ratchet.

The shaft M is oscillated, by means of a lever, O, on said shaft, from a crank or disk, P, on a continuously-rotating shaft, Q, through a connecting-rod, R. This shaft Q may be one of the regular shafts of the ruling-machine, or be driven by it, and has motion only when the machine is at work.

The connecting-rod R is made adjustable at either of its ends on the crank P or lever O in or out, relatively to the center of motion of said crank or said lever—as, for instance, by means of a screw, *e*, and slot or series of holes *f*—to regulate the supply of ink from the several fountains in a series to the several series of pens, by giving more or less motion to the shaft M, and so varying the length of the intermittent movements of the bucket-carriers C. The buckets E are also made detachable from their carriers C, to regulate the supply of ink from any one of the fountains without affecting the others, by simply removing any one or more of the buckets from the carrier.

This mode of regulating the supply will be found useful when the number of pens supplied from a single fountain is varied; but it will also be found serviceable under other circumstances, and may be used to advantage in connection with the herein previously-described mode of regulating the supply to the several pens from the different fountains by means of the adjustable connection of the rod R with the lever O or crank P.

Various ways may be adopted to provide for readily detaching and attaching the buckets E to regulate the supply. Thus they may have their shanks or pivots *b* fast to them, and said shanks or pivots be fitted loosely in the carrier C, and be secured thereto by pins *g*, the withdrawal of which provides for the removal of the buckets and their shanks from the carrier; but it is preferred to provide the buckets with split shanks or pivots, having a spring-like hold in the sockets which they fit in the carrier, as shown in Fig. 4, whereby said buckets may be very readily detached, as required, to regulate the supply.

The lever O, through which motion is communicated to the several bucket-carriers, is loose on the shaft M, and is only connected therewith by a spring or other catch, S, fitted to said lever, and arranged to engage with the shaft M—as, for instance, by its entry within a notch, *s*, in the end of said shaft. By such or other engaging and disengaging means, the supply of ink to the pens may be wholly stopped when necessary, as is often the case, without arresting the motion of the ruling-machine or of the shaft Q, by simply adjusting the catch S to disengage the lever O from the shaft M.

The fountains B are supported, by means of hooks at their ends, on cross-bars or stays *h*, which bind the end frames A A together. Said hooks V, at one end of either fountain, may be immovably attached to the fountain, and the hooks V′ V′, at the opposite end, be constructed to form a movable spring-clamp, which may be operated by the hand to release it from hold on the bar *h* it clips or engages with, thus providing for a ready detachment of the fountain when required to replenish or clean it, or for other purposes, and for the ready replacement of the fountain.

I claim—

1. In a paper-ruling machine, the combination, with a reservoir or fountain and a duct or tube for conveying the ink from said fountain to the cloth which distributes it to the pen or pens, of a bucket wheel or carrier, driven by or in connection with the machine when in motion, and arranged to operate as an intermediate supplying device of the ink to said duct from the fountain, substantially as and for the purpose or purposes specified.

2. The combination, with either intermittently-rotating bucket-carrier C, having attached pendent buckets E, of the oscillating shaft M, the pawl L, the ratchet-wheel K on the shaft D of the bucket-carriers, the fountain B, the trip *c*, the trough *d*, and the tube F, substantially as and for the purpose specified.

3. The combination, with the intermittently-rotating bucket-carriers C, which supply the ink to the pens, of the vibrating lever O, the rotating crank P, and the connecting-rod R, adjustable in relation with said lever or crank to vary the intermittent movement of the bucket-carriers, the oscillating shaft M, with its attached pawl L, and the ratchet-wheel K on the shaft D of said carriers, essentially as specified.

WM. HANDY.

Witnesses:
VERNON H. HARRIS,
FRED. HAYNES.