LOUDSPEAKER

Filed Sept. 25, 1967 2 Sheets-Sheet 1

FIG. 1

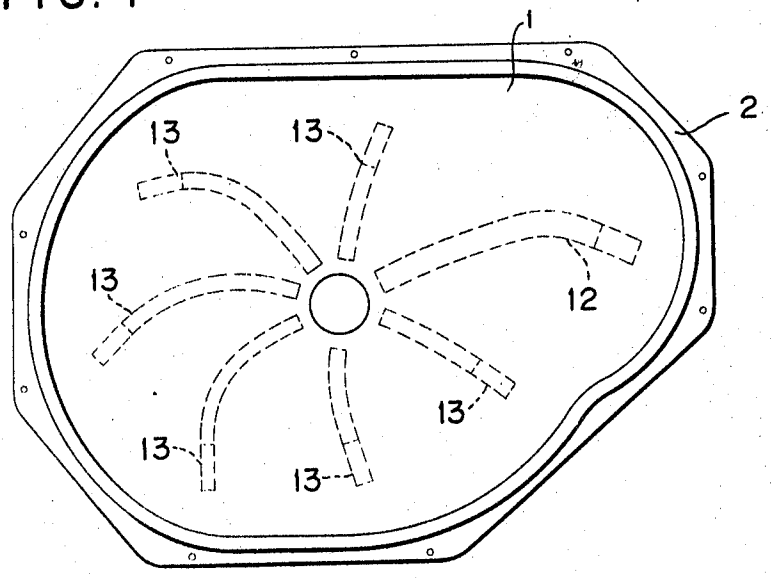

FIG. 2

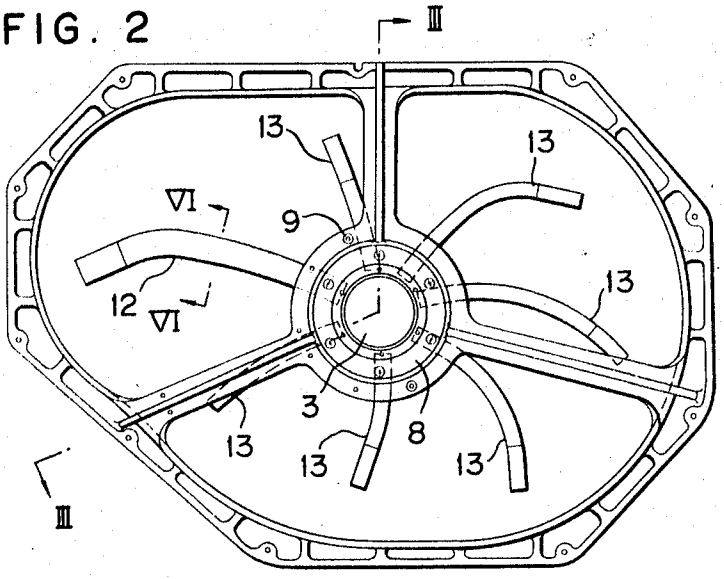

INVENTORS
YASUNORI MOCHIDA, IKUJI KURO KAWA,
KAZU KIYO ISHIMURA, HIROMI SOTOME,
BY Stevens, Davis, Miller & Mosher
ATTORNEYS

LOUDSPEAKER

Filed Sept. 25, 1967 2 Sheets-Sheet 2

FIG. 3

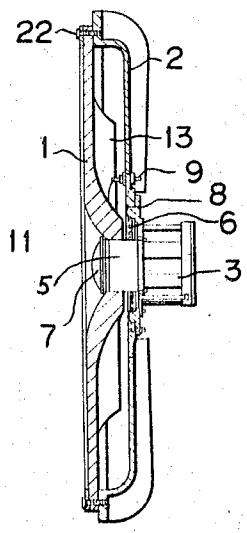

FIG. 5

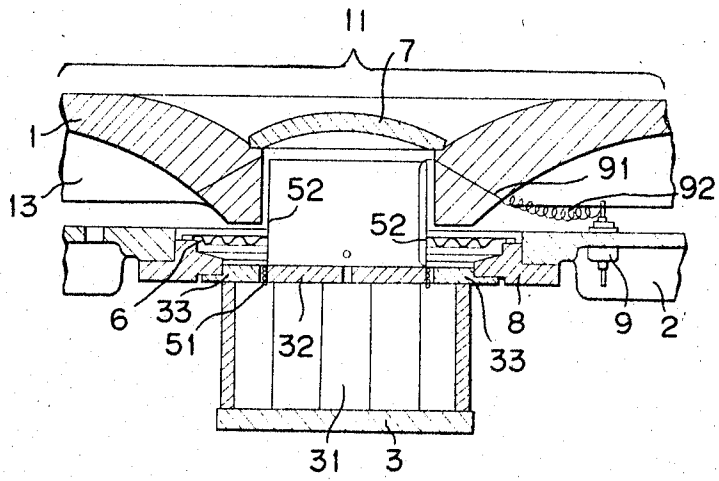

FIG. 6

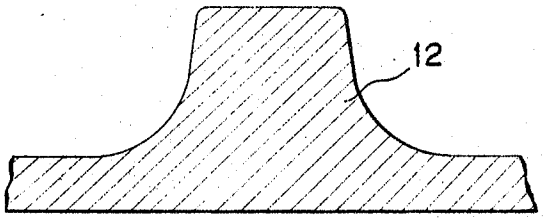

FIG. 4

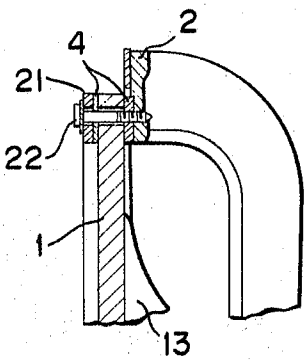

INVENTORS
YASUNORI MOCHIDA, IKUJI KUROKAWA,
KAZUKIYO ISHIMURA, HIROMI SOTOME,
BY Stevens, Davis, Miller & Mosher
ATTORNEYS

United States Patent Office

3,464,514

Patented Sept. 2, 1969

1

3,464,514

LOUDSPEAKER

Yasunori Mochida, Ikuji Kurokawa, Kazukiyo Ishimura, and Hiromi Sotome, Hamamatsu, Shizuoka, Japan, assignors to Nippon Gakki Co., Ltd., Hamamatsu, Shizuoka, Japan

Filed Sept. 25, 1967, Ser. No. 670,045
Claims priority, application Japan, Nov. 2, 1966, 41/72,547
Int. Cl. G10k *13/00;* H04r *7/16*
U.S. Cl. 181—32 8 Claims

ABSTRACT OF THE DISCLOSURE

A loudspeaker which comprises a diaphragm of a substantially flat plate made of foamed resin having substantial surface area, which diaphragm is clamped to its periphery on a frame, so that the periphery is prevented from forward and backward reciprocating movement, and adapted to be driven by a driving means substantially at the center. Said diaphragm has an asymmetric shape in elevation and a conical shape in section around the driven area, said conical shape having a curved generatrix gradually increasing its inclination toward the center of said driven area. Radial ribs are formed on said diaphragm around said driven area and have curved form.

BACKGROUND OF THE INVENTION

Field of the invention

The present invention relates to a loudspeaker and, particularly, a loudspeaker which can produce a wide range of sounds from low frequency to high frequency by a singe diaphragm with high efficiency and with a multi-resonance characteristic, which is particularly suitable for musical instruments.

Description of the prior art

An electric or electronic musical instrument employs a loudspeaker as sound producing means. Heretofore, a special loudspeaker has been designed for the musical instrument, and, consequently, the loudspeaker of general type designed for usual sound instruments such as radio receiver, gramophone or the like has been employed in the musical instrument which has similar function to that of the usual sound instrument.

A conventional cone-type loudspeaker generally used in sound instruments is so designed that its diaphragm makes a piston motion or overall reciprocating motion to obtain wide and flat frequency characteristic to produce sound output with high fidelity. If a single loudspeaker cannot cover the frequency range to be reproduced, a set of loudspeakers may be employed to cover the respective ranges of frequency. A flat-plate type loudspeaker using a relatively large and substantially flat plate of foamed resin, which has been recently developed, is designed fundamentally on the same technical consideration so as to obtain characteristic similar to that of the cone-type loudspeaker. The above-mentioned loudspeakers are suitable for sound reproducing means of the usual sound instruments but not suitable for sound producing means of the musical instruments.

Generally speaking, the sound of the musical instruments is required to have complexity and variety from the viewpoint of beautifulness and richness of sound, but an electronic musical instrument contains only a limited number of sound sources (tone generators) from the economical point of view, so that it can produce only simple and unsatisfactory sounds peculiar to electric or electronic musical instruments if it faithfully transduces

2

the electric signals produced by the sound sources into audible sounds. In contrast, a sound producing means of a musical instrument which is considered to produce beautiful sounds, such as a sound board of piano or a sound box of violin, has a multi-resonance characteristic and is an efficient sound radiator, so that it is not a simple transducer for transducing the vibration of the strings faithfully into sounds but a sound generating means which is excited by the vibration of the strings to make vibration with its own characteristic to create and radiate sounds.

SUMMARY OF THE INVENTION

We have made researches on the improvement of the sounds to be produced by the electronic musical instruments and found that the loudspeaker for the electronic musical instrument is to be designed to have characteristics peculiar to the musical instruments, independently of the design of the conventional loudspeaker.

The present invention is based on the concept of "creating sounds by the loudspeaker under the excitation of electrical signals" according to the sound generating principle of the general musical instruments and utilizing the multi-resonance characteristic of the diaphragm, rather than "faithfully transducing the electric signals into sounds."

It is a main object of the present invention to provide a loudspeaker particularly suitable for musical instruments in which a diaphragm is forced to make flexural vibration in order to obtain a multi-resonance characteristic, according to the above-mentioned concept.

It is an object of the present invention to provide, a loudspeaker of the above type in which means are provided to suppress the occurrence of excessive resonances at particular frequencies.

It is another object of the present invention to provide a loudspeaker of the above type which can efficiently produce a wide range of sounds from low frequency to high frequency.

According to the present invention, there is provided a loudspeaker comprising a diaphragm made of a substantially flat plate made of foamed resin having substantial surface area, which diaphragm is clamped at its periphery on a frame, so that the periphery is prevented from forward and backward reciprocating movement, and adapted to be driven by a driving means substantially at the center, said diaphragm having an asymmetric shape in elevation and a conical shape in section around the driven area, said conical shape having a curved generatrix gradually increasing its inclination toward the center of said driven area, and radial ribs being formed on said diaphragm around said driven area and having curve form. Thus, owing to the clamping of the periphery of the diaphragm, the loudspeaker of the present invention produces flexural vibration of the diaphragm with a multi-resonance characteristic. Also, due to the asymmetric form in elevation of the diaphragm and the provision of the curved ribs radially arranged around the center, the resonances are so controlled that they appear with moderate level at many frequencies of the frequency characteristic curve of the diaphragm, without giving rise to concentration of resonances at certain particular frequencies with extreme level, by the degeneration of modes. Furthermore, due to the construction of the diaphragm in which it is driven substantially at the center and is formed in conical shape around the driven area the generatrix of which is curved and gradually increases its inclination toward the center, together with the asymmetric formation of the diaphragm and the provision of the ribs as mentioned above, the loudspeaker according to the present invention increases the efficiency

over the wide range from low frequency to high frequency. These features of the present invention contribute to provide a loudspeaker particularly suitable for musical instruments.

BRIEF DESCRIPTION OF THE DRAWINGS

The drawings illustrate an embodiment of the present invention: in which:

FIG. 1 is a front elevation of the loudspeaker according to the present invention;

FIG. 2 is a rear elevation of the loudspeaker as shown in FIG. 1;

FIG. 3 is a section of line III—III in FIG. 2;

FIG. 4 is an enlarged sectional view of the mounting portion of the periphery of the diaphragm;

FIG. 5 is an enlarged sectional view of the driven area of the diaphragm; and

FIG. 6 is an enlarged sectional view on line VI—VI in FIG. 2.

DESCRIPTION OF THE PREFERRED EMBODIMENT

Now the present invention will be described in detail with reference to the drawings. FIGS. 1–3 show an embodiment of the invention, in which **1** is a diaphragm, **2** is a frame, **3** is a driving means, **4** is a thin packing, **5** is a voice coil, **6** is a damper, **7** is a cap, **8** is an adapter, and **9** is a terminal. The diaphragm **1** is made of foamed resin, such as foamed polystyrene, having light weight and high rigidity. The diaphragm may be made of other material, such as, polyvinyl chloride, polyethylene, polyamide, polyurethane, polycarbonate, polypropylene, polyacetal, acrylic resin and ABS resin (acrylonitrile/butadiene/styrene copolymer). The diaphragm **1** is clamped at the periphery thereof so that the periphery is prevented from forward and backward reciprocating movement, by fixedly holding the periphery to the frame **2** by means of a tapping screw **22** through a gasket **21**. The diaphragm **1**, when driven by the driving means **3** mounted on the frame **2**, makes a flexural movement rather than a piston motion or overall reciprocating motion, whereby the mechanical resonance characteristic is used to produce sounds. (High efficiency of low frequency sound can be obtained by driving the central area **11** of the diaphragm **1**, as shown.) That is, the diaphragm **1** does not serve as a simple transducer for converting electric signals into sounds, but as a sound producing means which vibrates with its own vibration characteristics in the form of a plate clamped at the periphery thereof, under the excitation of electric signals and radiates the sounds created thereby. By providing the thin packings **4**, such as adhesive tapes of foamed elastic material, between the diaphragm **1** and the frame **2** and between the diaphragm **1** and the gasket **21**, the bending stress at the periphery of the diaphragm is reduced and the durability of the diaphragm is increased. If the adhesive tape is used as the packing **4**, the diaphragm **1** and the frame **2** can be fixed together thereby, preventing the occurrence of noise due to abnormal trembling of the diaphragm or air passing through the narrow space around the periphery of the diaphragm.

It will be understood from the above description that the sound particularly suitable for the musical instruments can be obtained by clamping the periphery of the diaphragm **1** and driving the central area **11** to produce flexural movement of the diaphragm, but there remains a problem of the undesirable occurrence of extreme peaks and dips in the output frequency characteristic curve of the loudspeaker. In a diaphrgam of normal shape such as rectangular shape, vibration mode trisecting the diaphragm, namely, third-order vibration mode occurs. When there are two sides which are both straight and confronting with each other, higher-order vibration mode occurs due to the standing waves produced by the reflection from the confronting sides, thus producing extreme peaks and dips in the frequency characteristic curve. The present invention overcomes such problem by forming the diaphragm in an asymmetric shape, such as elliptical shape or oval shape partly convexed inward. In such asymmetric shape, the third-order vibration mode assumes a distorted shape so that the vibration mode is not clearly established and particularly the mode portions at the opposite ends assume different shapes so that resonance and antiresonance at the frequencies thereof decrease remarkably. Furthermore, the geometric form of this diaphragm is defined by an irregular curve and does not have parallel confronting sides, so that standing waves do not appear.

The present invention includes a further feature as hereinafter described. The driven area **11** of the diaphragm **1** is constructed as shown in FIG. 5, in which the driving means **3** is mounted on the frame **2** through the adapter **8** and a winding **51** of the voice coil **5** is positioned in a gap between a center pole **32** in front of the magnet **31** and an outer pole **33** and a damper is connected between the outside surface of a bobbin **52** and the adapter **8**. The front surface of the voice coil **5** is covered by a cap **7**. The input terminals **9** (one of which is shown in FIG. 5) are connected to the winding **51** of the voice coil through lead wires **91** passing the central conical portion of the diaphragm and flexible wires **92**. The driven area **11** including the voice coil **5** is arranged substantially at the center of gravity of the diaphragm. During the driving of the diaphragm by the driving means **3**, if the driven area **11** is positioned at the center of the diaphragm, the radiation efficiency of the low frequency sound is relatively high but the radiation efficiency of the medium and high frequency sound is relatively low in the conventional loudspeaker having the uniformly flat diaphragm. The present invention overcomes this problem by increasing the rigidity of the driven area of the diaphragm to increase the radiation efficiency of the medium and high frequency sound. For this purpose the driven area is formed in the conical shape having the curved generatrix increasing its inclination toward the center so that the rigidity increases gradually toward the center whereby the effective driven area is decreased and the driven mass is decreased as the frequency is increased.

Further in accordance with present invention, ribs **12** and **13** are formed on the rear surface of the diaphragm **1** as shown in FIG. 2. These ribs are arranged radially around the driven area **11** to improve the propagation of the vibration of the medium and high frequencies and suppress the extreme resonance owing to the flexural movement of the diaphragm. By the provision of the radial ribs **12** and **13**, the propagation of the vibration of the medium and high frequencies in the diaphragm from the driven area to the periphery is improved, while the radiation efficiency of the low frequency sound is not decreased since the rigidity of the diaphragm is decreased toward the periphery thereof. The ribs are curved, so that the rigidity of the diaphragm in the circumferential direction is increased and the asymmetricity of the diaphragm is further increased, thereby suppressing the occurrence of the excessive vibration mode. In the embodiment as shown in FIG. 6, the ribs are formed integrally with the diaphragm **1**, but the ribs may be formed of separate material such as aluminum sheet, paper or the like which are adhered on the material of the diaphragm. In the form as shown, the wider and longer rib **12** is disposed at the point where the third-order vibration mode is largely affected by the rib. The curvatures of the respective ribs are different. By changing the construction, the curvature and/or the number of the rigs, the occurrence of the vibration mode is changed and the frequency characteristic can be controlled according to the design.

Although the form as shown in the drawings is not

limited to any specific dimensions, a satisfactory result has been obtained with the following dimensions:

The diaphragm **1**:

Material (foamed polystyrene)		
	specific weight	0.03
Width	mm	854
Height	mm	604
Thickness at the flat portion	mm	11
The rib **12**:		
Height	mm	30
Width	mm	30
The rib **13**:		
Height	mm	30
Width	mm	20

From the above description it will be understood that the loudspeaker according to the present invention produces sounds by the flexural movement of the diaphragm which movement is suitably suppressed to obtain the optimum peaks and dips in the frequency characteristic and good radiation efficiency throughout the whole range of low frequency to high frequency sounds. Thus the present invention provides a loudspeaker which produces beautiful sound suitable for the musical instruments with high efficiency.

We claim:

1. A loudspeaker comprising a diaphragm of a substantially flat plate made of resin having substantial surface area, which diaphragm is clamped at its periphery on a frame and adapted to be driven by a driving means substantially at the center, said diaphragm having an asymmetric shape in elevation and a conical shape in section around the driven area, said conical shape having a curved generatrix gradually increasing its inclination toward the center of said driven area, and radial curved ribs having different respective curvatures formed on said diaphragm around said driven area.

2. A loudspeaker according to claim **1**, wherein said diaphragm is of foamed resin.

3. A loudspeaker according to claim **1**, wherein said ribs are integral with said diaphragm.

4. A loudspeaker according to claim **1**, wherein said ribs are of metal.

5. A loudspeaker according to claim **4**, wherein said ribs are of aluminum adhered to said diaphragm.

6. A loudspeaker according to claim **1**, wherein said ribs are of paper.

7. A loudspeaker according to claim **1**, wherein a packing of elastic material is provided between said diaphragm and said frame.

8. A loudspeaker according to claim **7**, wherein said packing is adhesive.

References Cited

UNITED STATES PATENTS

1,990,409	2/1935	Lawrance	181—32
2,716,462	8/1955	Brennan	181—32
2,905,260	9/1959	Williams	181—32
3,180,945	4/1965	Suzuki	179—115
3,247,925	4/1966	Warnaka	181—32

FOREIGN PATENTS

1,003,608	9/1965	Great Britain.

STEPHEN J. TOMSKY, Primary Examiner

U.S. Cl. X.R.

181—31