Dec. 21, 1926. 1,611,483

J. F. NEWSOM

SOUND INTERCEPTOR

Filed Nov. 14, 1921 3 Sheets-Sheet 1

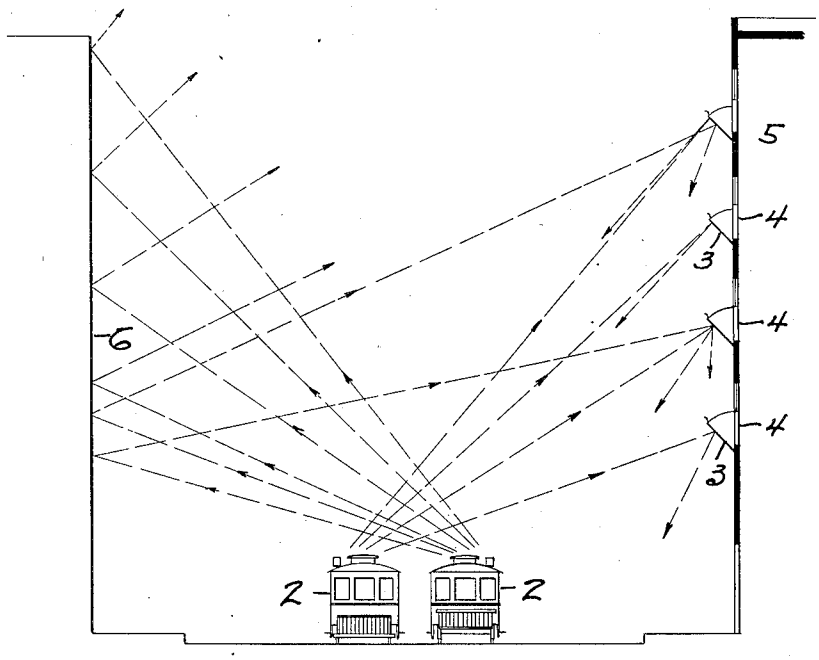

FIG. 1.

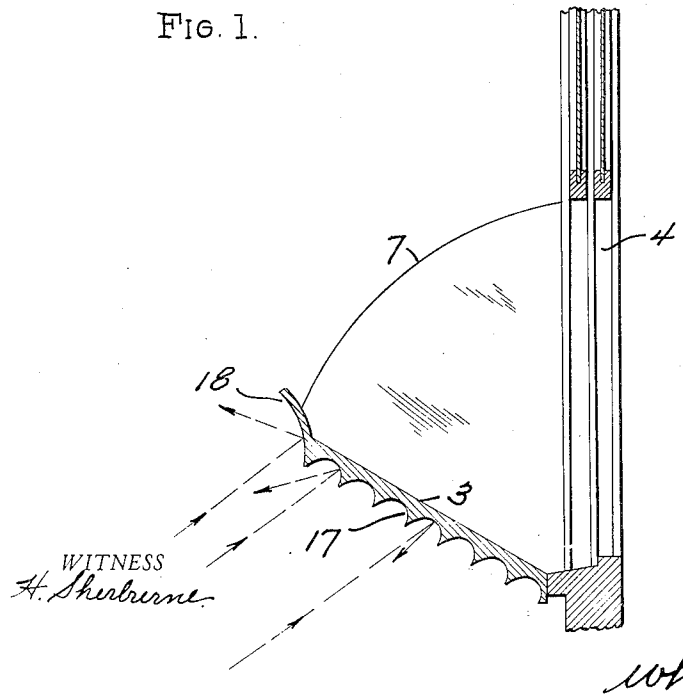

FIG. 2.

WITNESS
H. Sherburne

INVENTOR
John F. Newsom.

BY
White Frost & Evans
his ATTORNEYS

Dec. 21, 1926. 1,611,483

J. F. NEWSOM

SOUND INTERCEPTOR

Filed Nov. 14, 1921 3 Sheets-Sheet 2

FIG. 3.

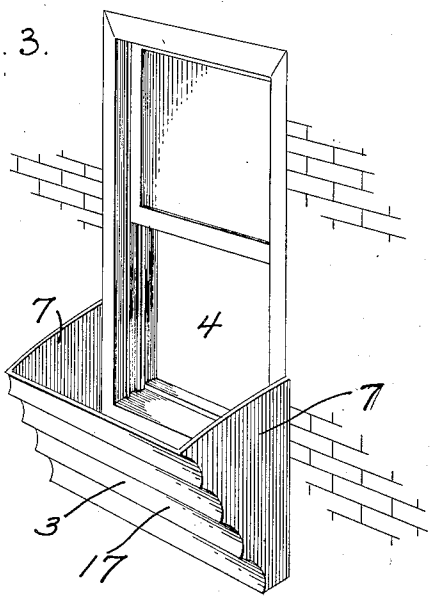

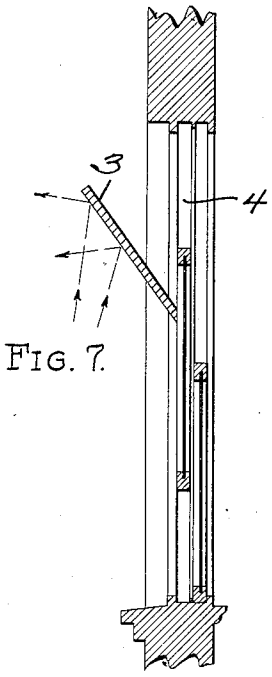

FIG. 7.

FIG. 4.

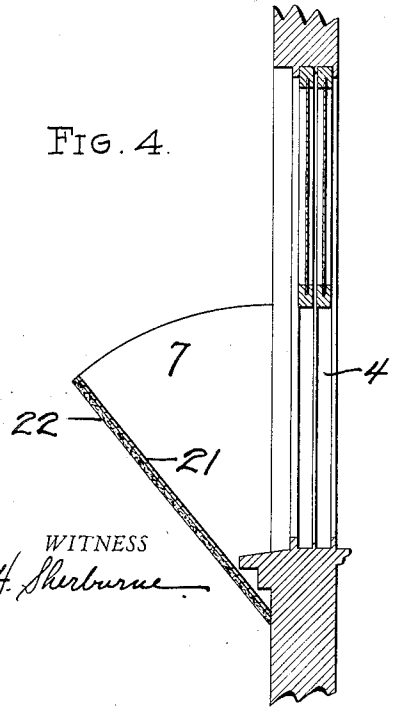

FIG. 5.

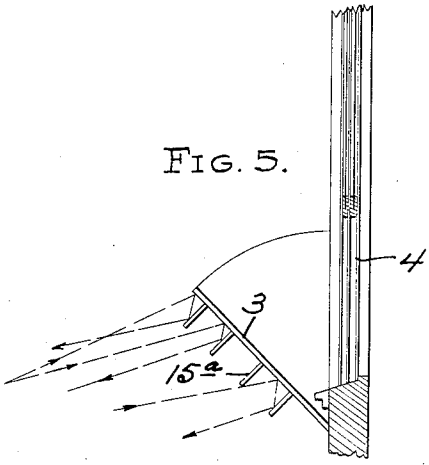

WITNESS
H. Sherburne

INVENTOR
John F. Newsom

BY
White Post & Evans
his ATTORNEYS

Dec. 21, 1926. 1,611,483

J. F. NEWSOM

SOUND INTERCEPTOR

Filed Nov. 14, 1921 3 Sheets-Sheet 3

FIG. 6.

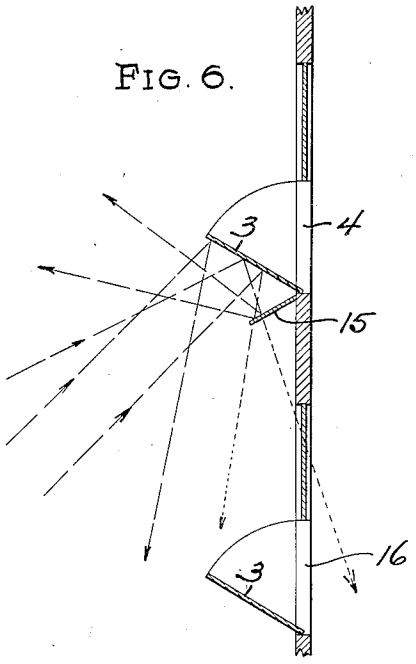

FIG. 8.

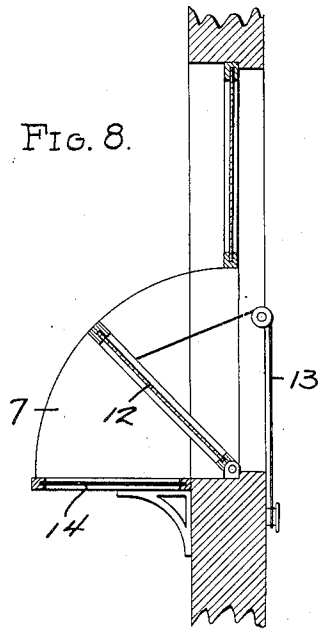

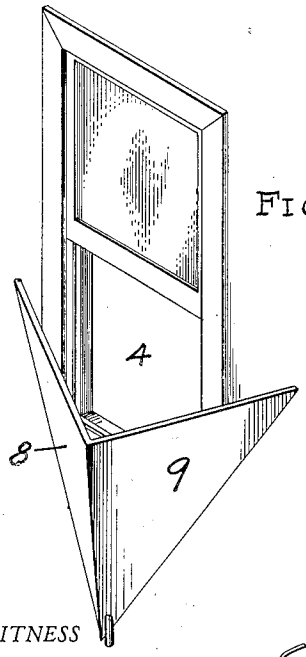

FIG. 9.

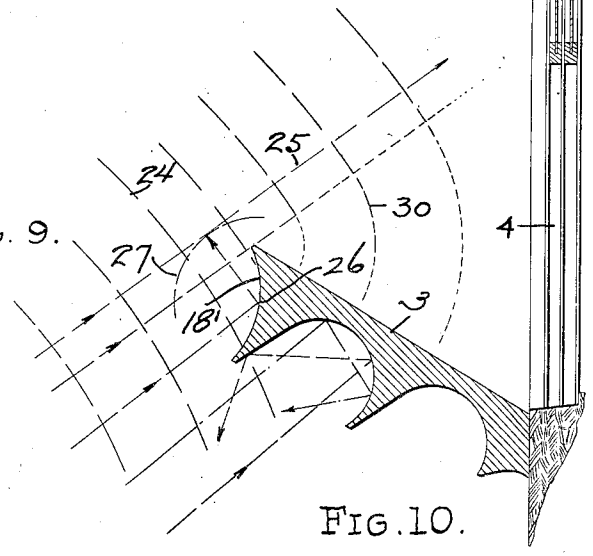

FIG. 10.

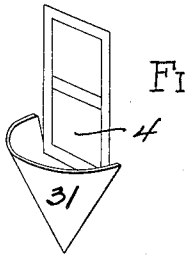

FIG. 11

WITNESS

H. Sherburne

INVENTOR.
John F. Newsom

BY

White Post & Evans

his ATTORNEYS

Patented Dec. 21, 1926. 1,611,483

UNITED STATES PATENT OFFICE.

JOHN F. NEWSOM, OF PALO ALTO, CALIFORNIA.

SOUND INTERCEPTOR.

Application filed November 14, 1921. Serial No. 515,180.

The invention relates to means for minimizing or reducing the volume of sound entering a room or apartment through a window opened to provide ventilation.

An object of the invention is to provide means for intercepting the sound waves travelling toward the open window of a room, to reduce the sound disturbance in the room.

Another object of the invention is to provide means for intercepting and absorbing or deflecting the direct sound waves so that they will not be directed into other rooms or apartments.

Another object of the invention is to reflect the intercepted waves in such manner that the reflected waves will be directed toward and across the paths of the oncoming waves.

The invention possesses other advantageous features, some of which, with the foregoing, will be set forth at length in the following description where I shall outline in full, those forms of the invention which I have selected for illustration in the drawings accompanying and forming part of the present specification. In said drawings I have shown several embodiments of my invention, but it is to be understood that I do not limit myself to such forms, since the invention, as set forth in the claims, may be embodied in a plurality of other forms.

The roar of sound from the street which enters the open windows of office buildings, hotels, hospitals and homes is very annoying and it is an object of the present invention to intercept the direct sound waves which ordinarily enter through the open windows and thus reduce or miminize the annoyance. These sounds emanate principally from certain sources in the street, such as street car tracks and crossings and moving street cars and the device of my invention is arranged to intercept the direct sound waves from these sources. By eliminating these direct sound waves, the volume of sound entering the open window is very greatly lessened and the annoying effects of the loud and harsh sounds are practically eliminated. The device of my invention is arranged to obstruct or intercept the direct sound waves arriving at the open window, and is so disposed with relation to the window, that the window opening, when the window is opened to provide ventilation, is within the sound shadow created by the device. The sound shadow is that area lying behind the device in a direct line from the source of sound. Thus only indirect or secondary sound waves, accompanied by a small volume of reflected sound waves enter the window. Sound interceptors may be arranged to create a sound shadow over both the upper and lower halves of the ordinary window, but since the lower half of the window is ordinarily opened for direct ventilation, in the accompanying drawings I have shown the interceptors arranged to place the lower portions of the windows in the sound shadow.

Referring to the accompanying drawings:—

Figure 1 is a diagrammatic cross section of a street, showing buildings on opposite sides thereof and street cars operating thereon and showing sound deflectors arranged adjacent the windows of one building and indicating the direction of propagation of sound waves from the source of sound, which would directly enter the window openings it is desired to shield.

Fig. 2 is a vertical section through an open window showing one form of sound deflector associated therewith, the under surface being supplied with concave faces to reflect the impinging waves back towards their source and with a curved outer end to direct the waves striking there outwardly across the track of the on-coming waves.

Fig. 3 is a perspective view of the interceptor shown in Fig. 2 arranged adjacent an open window.

Fig. 4 is a vertical section through a modified form of interceptor.

Fig. 5 is a vertical section through one form of sound deflector.

Fig. 6 is a vertical section through a building wall showing another form of sound deflector.

Fig. 7 is a vertical section through a window showing an interceptor arranged on the upper sash.

Fig. 8 is a vertical section of a window opening showing a further modified form of sound deflector.

Fig. 9 is a perspective view of an open window showing another form of sound deflector.

Fig. 10 is a diagrammatic representation showing the interception and reflection of the sound waves.

Fig. 11 is a perspective view of a window equipped with a sound interceptor which presents a curved surface to the oncoming sound waves, and which at its edges contacts with the building wall, thus eliminating the necessity of side shields.

The sound interceptor of my invention, is arranged adjacent a window opening in a position to intercept the sound waves directed toward the open area of the window and its position at the window is determined by the relative position of the main sound source and to some extent by the position of the walls of the buildings on the opposite side of the street. The interceptor is preferably disposed in such manner as to intercept the maximum quantity of direct sound rays and the minimum quantity of light and air for ventilation when the window is opened. The deflector is preferably made of non-resonant or sound deadening material, plate glass being a desirable material on account of its transparency. The interceptors may be formed with simple plane or curved surfaces, or the reflecting surface may comprise a plurality of prismatic, concave, convex or other lenticular surfaces. A plane surface may act with equal efficiency to intercept the sound, but various broken or irregular surfaces may be employed to control the direction of reflection of the sound waves. Instead of constructing the interceptor of material which will reflect the sound, its surface may be made of sound deadening or absorbing material, such as felt.

Referring to Fig. 1, the principal source of sound is the moving street cars 2 and the devices of my invention are arranged principally to intercept sound from that source. Sound interceptors 3 are arranged adjacent the window openings 4 in the building 5, and the size and arrangement of the interceptors varies with the relative position of the source of sound, the interceptors being placed to intercept the direct sound waves proceeding toward the area of the open window. The interceptors also intercept all or a large portion of the waves reflected from the wall of the building 6 on the other side of the street. Sound waves travelling in a direction along the street, for instance, those emanating from a street car a hundred feet or more away from the window laterally, are prevented from entering the open window around the side edges of the interceptor, by shields 7 arranged at the sides of the interceptor and closing the passages between the side edges of the interceptor and the building wall. Instead of employing side shields, the interceptor may be formed curved or V-shaped, as shown in Fig. 9, wherein the interceptor is formed in two parts 8—9, each substantially triangular in shape, the lower edges of the parts contacting with the wall of the building and extending at an angle to each other from below the window to points above the bottom of the window at the sides thereof. The upper edges of the parts may lie in a plane disposed above the bottom of the window and the outer surface of the shield is inclined at the proper angle to intercept and deflect the sound waves. The pocket formed may be provided with a drain pipe for conducting away the collected rain.

Instead of providing an interceptor which is an added element to the building construction, the sash of a window may be used for that purpose. In Fig. 8, I have shown a window in which the lower sash 12 is pivoted to the window sill at its lower edge, so that the sash may be inclined outwardly, as shown, to the proper angle to intercept the direct sound waves from the main sound source and prevent them entering the window opening. Suitable means, such as cord 13, may be employed for holding the sash in its extended inclined position and side shields 7 are used to prevent the entrance of laterally progressing sound waves. A screen 14 or other suitable device may be arrange below the window to catch broken glass in the event that the glass in the lower sash is broken. In Fig. 7 I have shown an interceptor or deflector 3 secured to the upper sash of the window, so that when the window is opened at the top to provide ventilation, the area of the opening lies within the sound shadow of the interceptor.

In some installations, the angle of the deflector may be such that the deflected sound waves are directed toward the window of the room below, to the great annoyance of the occupant of such room. To prevent this, the reflecting surface of the deflector is formed to direct the reflected waves away from the wall of the building, or a secondary deflector is arranged below the main deflector, to deflect the reflected waves. In Fig. 6, I have shown a secondary reflector 15 disposed below the main deflector 3 to intercept the reflected waves which are projected toward the nether open window 16 and reflect them outward into the path of the oncoming waves, so as to neutralize, as far as possible, by interference, the effect of the on-coming waves. In Fig. 5 I have shown another form of deflector which prevents the reflected waves from entering the window below. Instead of providing a single secondary reflector, as in Fig. 6, I provide a plurality of smaller secondary reflectors 15^a arranged on the under surface of the deflector.

Another form of deflector for accomplishing this result is shown in Fig. 2, in which the lower face of the deflector 3 is provided with a plurality of concave or parabolic depressions 17, forming a plurality of deflec-

tors, from which the sound is reflected generally toward the sound source, to provide as much sound interference as possible. At its outer edge, the deflector is preferably provided with a concave reflecting portion 18, the plane of the outer edges of which is substantially perpendicular to the path of the sound wave at that point, to provide the maximum interference and to cut off the wave sharply so that a sound shadow is formed behind the deflector. When it is not desired to reflect the intercepted waves, the interceptor may be composed of sound deadening or absorbing material. In Fig. 4 I have shown an interceptor of this type, comprising a frame or base 21 having a thick layer of felt 22 on its under surface, which may be secured to the base in any suitable manner.

In Fig. 10, I have shown diagrammatically, the effect of the deflector on the sound waves. The on-coming sound waves are indicated by the curved lines 24, these waves being propagated in the direction indicated by line 25. A portion of these waves is cut off by the deflector portion 18', the cut off portions being reflected back against the on-coming waves at different angles, depending upon the angle of incidence, the wave striking the deflector at the point 26 being reflected back as indicated by the waves 27, across the on-coming waves to provide as much interference as possible. The portions of the waves which pass the deflector develop new sound sources at their ends, but the quantity and volume of this sound is small in comparison with the original sound, the general direction of the waves emanating from the ends of the direct waves being indicated by the dotted lines 30. It is the sound waves so developed that will enter the open window behind the sound deflector. This is the area of the sound shadow, created by the deflector which is so placed as to create this shadow over the portion of the window it is desired to have open.

The interceptor shown in Fig. 11, comprises a curved element 31 disposed to place the window opening within the sound shadow. The curved surface will cause the major portion of the sound waves to be deflected laterally and away from the building. A deflector of this character may be formed of plate glass, which will reflect the sound and not interfere with vision from the window.

I claim:

1. The combination with a wall having a window adapted to be opened, of an inclined sound deflecting surface arranged between a source of sound and the open window and shielding the open window from the sound source, and means for causing the deflected sound waves to be reflected across the path of the oncoming waves.

2. The combination with a building wall provided with windows, of a sound deflector arranged adjacent one of said windows to disperse the sound directed towards said window the under surface of the deflector being formed to direct away from other windows in said building wall, portions of deflected sound coming towards said windows.

3. The combination with a wall having a window adapted to be opened, of a sound deflector having a concave deflecting surface at its outer edge interposed between the window opening and a source of sound.

4. The combination with a wall having a window adapted to be opened, of a sound deflecting element having an indented reflecting surface interposed between the window opening and a source of sound.

5. The combination with a wall having a window adapted to be opened, of a sound deflecting element having a curved reflecting surface interposed between the window opening and a source of sound.

In testimony whereof, I have hereunto set my hand.

JOHN F. NEWSOM.