L. A. CASGRAIN.

WORK SUPPORT MECHANISM FOR FASTENING INSERTING OR OTHER MACHINES.

APPLICATION FILED MAY 21, 1907.

1,028,434.

Patented June 4, 1912.

3 SHEETS—SHEET 1.

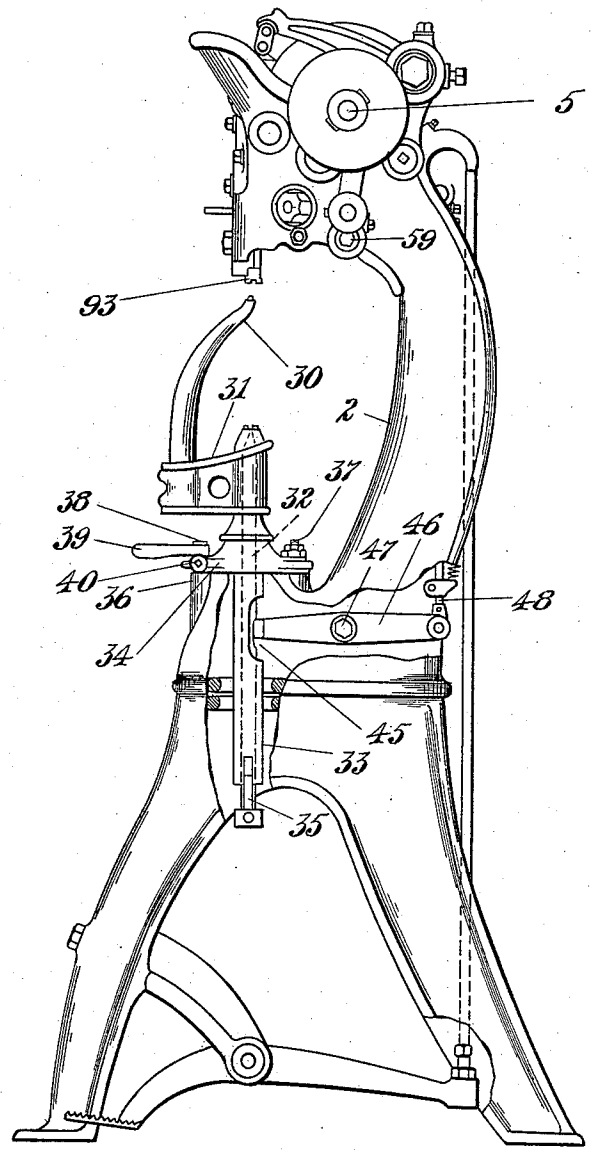

Fig. 1.

WITNESSES—
Bertha M. Hutchinson.
Elizabeth C. Coupe

INVENTOR—
Louis A. Casgrain
By his Attorney,
Nelson W. Conrad

COLUMBIA PLANOGRAPH CO., WASHINGTON, D. C.

L. A. CASGRAIN.

WORK SUPPORT MECHANISM FOR FASTENING INSERTING OR OTHER MACHINES.

APPLICATION FILED MAY 21, 1907.

1,028,434.

Patented June 4, 1912.

3 SHEETS—SHEET 2.

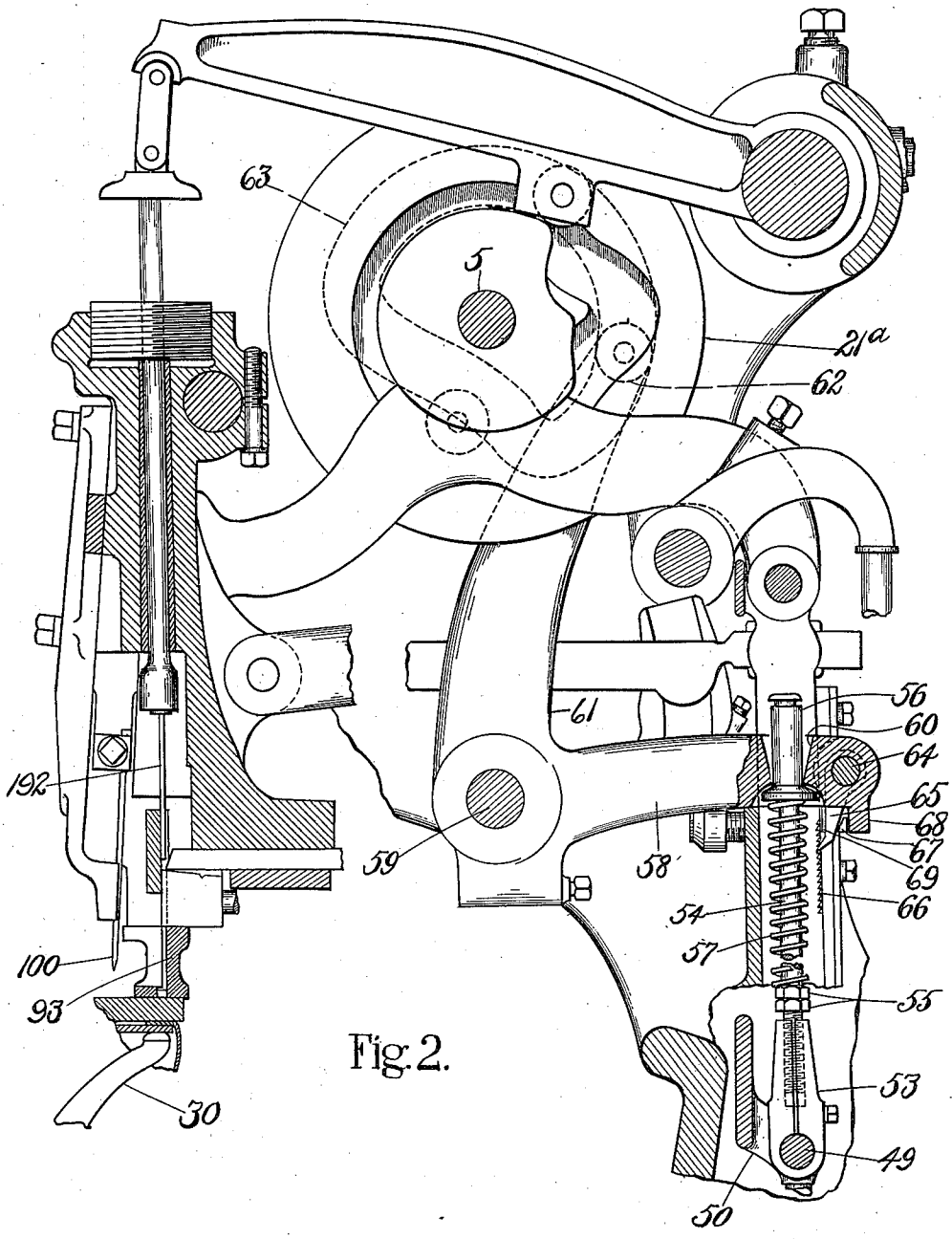

Fig. 2.

WITNESSES.

Bertha M. Hutchinson.

Elizabeth C. Crespe

INVENTOR.

Louis A. Casgrain

By his Attorney.

Wilson W. Howard

COLUMBIA PLANOGRAPH CO., WASHINGTON, D. C.

L. A. CASGRAIN.

WORK SUPPORT MECHANISM FOR FASTENING INSERTING OR OTHER MACHINES.

APPLICATION FILED MAY 21, 1907.

1,028,434. Patented June 4, 1912.

3 SHEETS—SHEET 3.

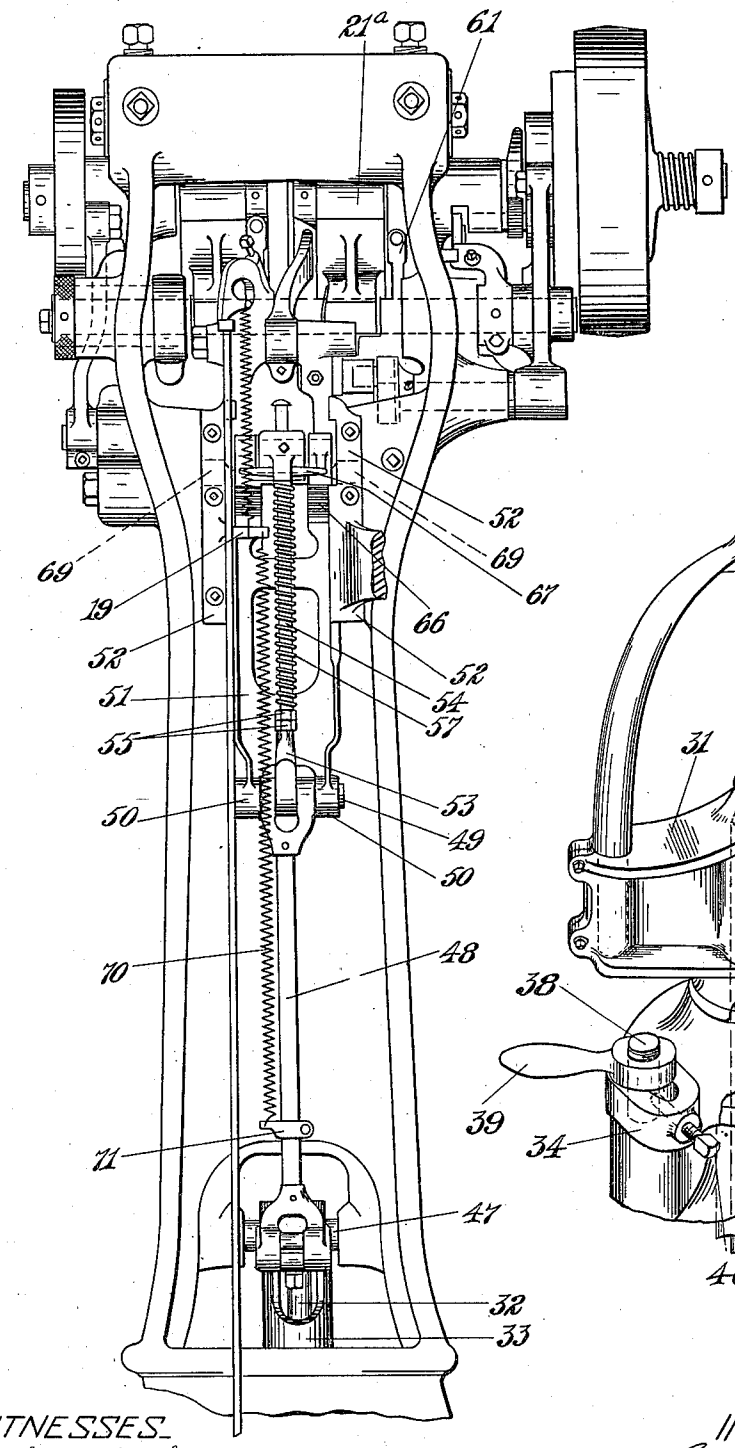

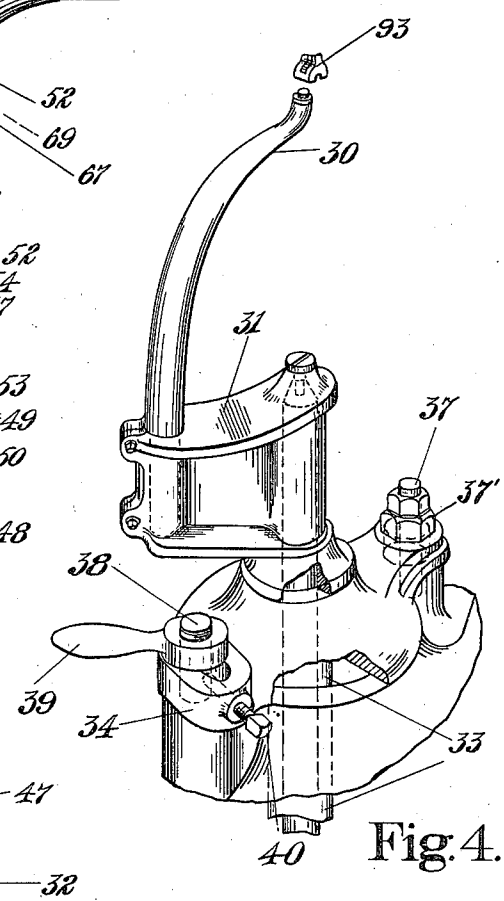

Fig. 4.

WITNESSES.
Bertha M. Hutchinson.
Elizabeth C. Coupe

Fig. 3.

INVENTOR.
Louis A. Casgrain
By his Attorney
Nelson W. Howard

COLUMBIA PLANOGRAPH CO., WASHINGTON, D. C.

UNITED STATES PATENT OFFICE.

LOUIS A. CASGRAIN, OF BEVERLY, MASSACHUSETTS, ASSIGNOR TO UNITED SHOE MACHINERY COMPANY, OF PATERSON, NEW JERSEY, A CORPORATION OF NEW JERSEY.

WORK-SUPPORT MECHANISM FOR FASTENING-INSERTING OR OTHER MACHINES.

1,028,434. Specification of Letters Patent. Patented June 4, 1912.

Original application filed March 17, 1906, Serial No. 306,612. Divided and this application filed May 21, 1907. Serial No. 374,853.

To all whom it may concern:

Be it known that I, LOUIS A. CASGRAIN, a citizen of the United States, residing at Beverly, in the county of Essex and Commonwealth of Massachusetts, have invented certain Improvements in Work-Support Mechanism for Fastening-Inserting or other Machines, of which the following description, in connection with the accompanying drawings, is a specification, like reference characters on the drawings indicating like parts in the several figures.

This invention relates primarily to machines for inserting nails, slugs or other fastenings and particularly to such machines of that character as are used in the manufacture of boots and shoes.

More specifically, the invention relates to the horn or other means for supporting the work in proper relation to the other parts of the machine and it relates also to the mechanism by which the work support is actuated.

The present invention is, by way of illustration, herein shown and described as embodied as a part of the machine for inserting fastenings shown and described in application for Letters Patent of the United States, Serial No. 306,612, filed by this applicant March 17, 1906, of which the present application is a division. It will be understood, however, that the mechanism herein claimed, while in the specific form shown designed for use in the machine of the earlier application mentioned, is capable without substantial change of use in machines of radically different construction.

In a machine of the class indicated, where a series of fastenings are inserted during the continuous operation of the machine, it is desirable that the work support shall be sustained unyieldingly, or with heavy pressure, while mechanism or devices which tend to depress the work are acting upon it. It is particularly desirable that the work be sustained firmly at the time that fastenings are being driven. On the other hand, the pressure exerted by the work support in clamping the work between itself and the presser foot or other abutment should be relieved while the work is being fed. Moreover, provision should be made whereby any variation in the thickness of the stock will not interfere with the proper actuation of the work support in the manner just indicated. Furthermore, in order to make it practicable for a workman to operate a machine continuously during a number of hours at considerable speed and with maximum efficiency but without excessive strain or fatigue to himself, it is desirable that the machine should be provided with mechanism for separating the work support and the cooperating presser foot at the desired time a sufficient distance to permit work to be readily removed and replaced.

It is a primary object of the present invention to produce a novel work support mechanism of the type above indicated.

According to one feature of the invention the work support is underbalanced or so sustained that it normally and constantly tends to assume its lowest or a depressed position. Means which acts intermittently during each cycle of operations raises the work support yieldingly to clamp the work and then locks the work support rigidly in raised position. With this construction, whenever the means which acts to raise or sustain the work support becomes inoperative, the work support immediately commences to descend, thus relieving the pressure upon the work. Preferably, also, after the work support has been raised yieldingly and before it is finally held immovable or locked in raised position, it is raised positively for a certain distance, the extent of which may be adjusted if desired, so that the work will be compressed and maintained in this condition until after the fastening has been inserted.

Another feature of the present invention relates to the manner of mounting the work support or horn so that it may be moved away from operative work clamping position and, specifically, whereby it may be moved laterally so as to remove the horn tip out of line with the driver and other parts of the machine which are located immediately above the work support. One purpose of this construction is to render these parts of the machine readily accessible in order to provide for the removal or adjustment of parts. In this aspect, the invention comprises a connection between the work support and the mechanism for actuating it which permits lateral movement of the work support. Preferably the work sup-

port, consisting of a rotatable curved horn, is carried by a guiding member or bearing pivoted to a part of the machine so that the bearing together with the horn may be moved in a plane substantially at right angles to the axis about which the horn rotates. It is an advantage also to provide a relatively long bearing for the vertically movable spindle upon which the horn is carried so that in the operation of the machine the vertical movements of the horn will be accurately in a predetermined path. In the form of the invention herein shown, therefore, the horn spindle is mounted to slide in a long sleeve forming a part of the pivoted guiding member and the spindle is provided with a notch to receive the end of a lever which forms part of the mechanism for reciprocating the horn. As herein shown, also, a device is provided for securing the pivoted member rigidly in position so that the horn will not be accidentally displaced laterally while the machine is running.

In addition to the novel features already mentioned, the present invention comprises also certain other arrangements and combinations of parts as well as particular details of construction all of which will be hereinafter fully described and included in the appended claims.

Referring to the drawings,—Figure 1 shows in side elevation a machine in which a preferred form of the present invention is embodied, certain parts of the frame being shown as broken away; Fig. 2 is a view in sectional elevation taken substantially upon the central transverse plane of the machine; Fig. 3 is a view in rear elevation of the upper part of the machine; and Fig. 4 is a detail view in perspective showing the work support and the manner of mounting it.

For convenience the same reference numerals are used in this application as are used for corresponding parts in the original application, Serial No. 306,612, above mentioned. Those parts of the machine, shown in the accompanying drawings but not directly relating to the combinations herein claimed, are fully described in the original application. It will be sufficient to state here that the machine includes a frame 2 for supporting the various parts, a main shaft 5 to which power in transmitted and upon which are several cam blocks, such as 21ª, containing cam surface for actuating the various mechanisms. The work, as shown in Fig. 2, is sustained by the work support 30 and at certain times is clamped against the presser foot 93. An awl 100 and driver 192 are actuated by suitable mechanisms for forming in the work openings for the fastenings and for driving them.

Referring now to the parts of the machine to which the present application particularly relates, the work support is shown as a vertically movable curved horn 30 mounted in an arm 31 and rotatable upon the horn spindle 32. A long sleeve 33, rigid with a cap or plate 34, constitutes, together with the plate, a bearing or guide for the spindle 32, the sleeve being slotted at its lower end to receive a bar 35, extending from the spindle into the slots, to prevent rotation of the spindle. The main frame 2 has a boss 36 with a horizontal bearing surface upon which the plate 34 may be swung about a pivot 37 preferably passing through an adjustable eccentric sleeve 37′ in order to carry the work support out of vertical alinement with the presser foot so as to render the parts above the work support readily accessible. The plate 34 is provided, as shown in Fig. 4, with a notch through which a stud 38, projecting upwardly from boss 36, passes when the plate is swung laterally to bring the work support into position. A handle 39 with an eye having screw threads to engage the threads of stud 38 serves to clamp the plate 34 to the boss 36 so as to prevent lateral movement of the work support during the operation of the machine. An adjusting screw 40 in plate 34 bearing against stud 38 determines the location laterally of the work support when in working position.

The novel automatic mechanism for reciprocating the work support will now be described.

The spindle 32 is notched at 45 to receive the end of a lever 46, pivoted at 47 in the frame 2. The rear end of lever 46 is connected by a link 48 to a pivot pin 49 mounted in two offset ears 50 at the lower end of a slide which is vertically movable in ways in the machine frame being retained in place by plates 52. A block 53, through which pin 49 passes, has a threaded socket into which is screwed a rod 54. Loosely mounted on the upper end of this rod is a flanged sleeve 56 which is supported upon a coiled spring 57 surrounding the rod and bearing at its lower end upon the upper of two nuts 55. One arm 58 of a two armed lever, mounted to oscillate on the concentric portion of an adjustable shaft 59 secured in the machine frame, is provided with a hole 60 through which the upper ends of rod 54 and of sleeve 56 pass, the flange of the sleeve engaging the lower recessed side of the arm. The other arm 61 of the two armed lever has a stud or roll 62 running in a cam track 63 in the right side of cam block 21ª, as viewed in Fig. 3. In the rear of the hole 60 in arm 58 is a transverse pin 64 supporting two pawls 65 which are adapted to engage corresponding ratchet teeth 66 on the slide 51. A leaf spring 67 supported by a lug 68 at the

end of the arm 58 forces the pawls toward their ratchet teeth. An adjustable plate 69, having the function of a shield, rests over a greater or less number of the ratchet teeth for a purpose to be described, being clamped in adjusted position under retaining plates 52. A spring 70 connected at its upper end to a fixed part 19 and at its lower end to an adjustable collar 71 on rod 48 counterbalances, to a greater or less extent as may be desired, the work support 30 and its connected parts. Preferably, the strength of the spring and the adjustment of collar 71 are such that the work support constantly tends to move to its lowest position.

During each cycle of operations, the arm 58, actuated by cam groove 63, first raises the work support through spring 57 to clamp the work with a yielding pressure. When, or just before, arm 58 reaches the lower end of its stroke, pawls 65 engage the ratchet teeth 66, thus providing a positive connection between the work support and its actuating cam so that the work support is locked rigidly in raised position. Preferably the shield 69 is so adjusted that the pawls engage the ratchet teeth just before arm 58 completes its downward stroke so that the final movement of the arm causes the work support to be raised positively a short distance to compress the work, after which it is locked, as described. The extent of the compressing or lifting movement of the work support depends upon the position of the shield 69 and is independent of the thickness of the work. The force exerted through spring 57 may be varied by adjusting nuts 55 on rod 54 with or without adjusting rod 54 in the socket in block 53.

The operation and function of the various parts of the entire machine, including the mechanism for actuating the work support, is fully explained in the original specification above mentioned, but so much of the operation as is related to the work support will now be briefly described.

The machine is so constructed and adjusted that it always stops at approximately the same point in its cycle of operations. When the machine is at rest the horn actuating arm 58 is raised and the horn remains in its lowest position, as shown in Figs. 1 and 4. After the operator has actuated the usual starting treadle and shortly after the main shaft 5 commences to rotate the work support 30 is raised, at first yieldingly through spring 57 and then positively as the pawls 65 engage the ratchet teeth 66 on the slide 51 and finally the work support is locked in raised position, as shown in Figs. 2 and 3. While the work support is thus firmly sustained in raised position, certain operations are performed upon the work, including, in the particular machine illustrated, the formation in the work of an opening for the head of the fastening and, by awl 100, an opening for the shank of the fastening, the driving of the fastening by driver 192 and the closing of the stock over the head of the fastening. After these operations have been completed, the rear arm 58 of the cam actuated lever is raised and the work support 30 starts to move downwardly slowly. In the operation of the machine at usual speeds, the work support moves downwardly so slowly that, when released by its lifting mechanism, it can descend only a short distance before it is raised again by that mechanism to clamp the work. If the operator, desiring to continue the operations of the machine, maintains the starting treadle in depressed position, the machine will continue to repeat the cycle of operations above described and indefinitely. On the other hand, if the operator wishes to discontinue the operation of the machine, he will release the starting treadle and as the machine comes to rest the work support will descend to its lowest position so that the work may be removed.

Having thus described my invention in detail, what I claim as new and desire to secure by Letters Patent of the United States is:—

1. In a machine of the class described, a vertically movable work support so sustained as normally to tend to assume a depressed position, power operated means acting intermittently during each cycle of operations to raise and sustain the work support yieldingly and then to sustain it rigidly in raised position.

2. In a machine of the class described, a vertically movable work support so sustained as normally to tend to assume a depressed position, means acting intermittently during each cycle of operations to raise the work support first yieldingly and then positively and to sustain it rigidly in raised position together with adjustable means for varying the positive movement.

3. In a machine of the class described, a vertically movable work support so sustained as normally to tend to assume a depressed position, a single cam and connections between it and the work support acting intermittently during each cycle of operations to raise the work support yieldingly, then to sustain it rigidly in raised position, and finally to release it so that it will descend, whereby the work may be alternately clamped and unclamped during each cycle of operations.

4. In a machine of the class described, a vertically movable work support, means for partially but not wholly counterbalancing it, means acting intermittently during each cycle of operations to raise the work support yieldingly and then to sustain it rigidly in raised position, the latter means being constructed and arranged to sustain the work

support so that it may yield downwardly during the first part of its upward movement.

5. In a machine of the class described, a vertically movable work support, a power-actuated lever and connections between said lever and said work support for moving the work support yieldingly, and a pawl and ratchet controlled by said lever for rendering said connections unyielding, whereby the work support is locked rigidly in position at a predetermined point in the cycle of operations.

6. In a machine of the class described, a vertically movable work support, a power actuated member and connections including a yielding device between said member and said work support for raising the work support, and means rendered operative automatically through the movement of said member to lock the work support rigidly in raised position at a predetermined point in the cycle of operations.

7. In a machine of the class described, a vertically movable work support so sustained as normally to tend to assume a depressed position, a power actuated member, connections including a yielding device between said member and said work support for moving the work support, and means carried by said member and rendered operative automatically at a predetermined point in the cycle of operations for connecting the member and work support positively for movement in the direction to raise the work support.

8. In a machine of the class described a work support having a spindle or shank and movable vertically, and also movable laterally when the machine is at rest, and means mounted independent of the work support for controlling its vertical position including a lever directly engaging the spindle but constructed and arranged to permit lateral movement of the work support and spindle.

9. In a machine of the class described, a supporting frame, a vertically movable work support having a spindle with a notch or recess, a lever engaging said notch or recess for moving the work support, a sleeve serving as a bearing for the spindle and having provision for lateral movement, whereby the work support may be swung from operative to inoperative position when desired, and means for locking the sleeve firmly to the frame.

10. A rotatable horn, also movable both vertically and laterally, a non-rotatable horn spindle to support the horn provided with a notch, a lever engaging said notch for moving the horn spindle vertically but arranged to permit lateral movement of the spindle.

11. In a machine of the class described, a rotatable horn, a pivoted guiding member or bearing for the horn movable in a plane substantially at right angles to the axis of rotation of the horn, and means for clamping the horn against movement in said plane while the machine is in operation.

12. In a machine of the class described, a supporting frame, a curved horn, a vertically movable spindle upon which the horn is supported, and a guiding member or bearing for the spindle pivoted on the frame eccentrically to the axis of the tip of the horn and movable about its pivot to change the lateral position of the horn.

13. In a machine of the class described, a supporting frame, a curved horn, a vertically movable spindle upon which the horn is supported, a guiding member or bearing surrounding the spindle for a large portion of its length, said member being supported by and slidable upon the frame to change the lateral position of the horn.

14. In a machine of the class described, a supporting frame provided with a plane supporting surface, a curved horn, a vertically movable spindle upon which the horn is supported, and a guiding member or bearing for the spindle supported by the plane surface of the frame and pivoted to slide thereover to change the lateral position of the horn.

15. In a machine of the class described, a vertically movable work support, a power actuated member, connections including a yielding device between said member and said work support for raising the work support, and means rendered operative through the movement of said member for connecting the member and work support positively for movement in the direction to raise the work support and to maintain it rigidly in raised position.

16. In a machine of the class described, a vertically movable work support, sustaining devices for the work support so arranged that when freed the work support will overbalance said devices and assume a depressed position, means acting intermittently during each cycle of operations to raise the work support yieldingly and then to sustain it rigidly in raised position.

17. In a machine of the class described, a vertically movable work support so sustained as normally to tend to assume a depressed position, a power-actuated member and connections between said member and work support for raising the work support yieldingly, and means rendered operative by the movement of said member for rendering said connections unyielding, whereby the work support is locked rigidly in position at a predetermined point in the cycle of operations.

18. In a machine of the class described, a vertically movable work support, a power-actuated lever and connections between said

lever and work support for moving the work support yieldingly, and a pawl carried by said lever and a ratchet connected with the work support arranged to lock the work support rigidly in position after it has been moved yieldingly.

19. In a machine of the class described, a vertically movable work support, means including a power-actuated member for moving the work support upward yieldingly, and means for thereafter establishing a positive connection between said member and a part connected with the work support to lock the work support rigidly in position.

In testimony whereof I have signed my name to this specification in the presence of two subscribing witnesses.

LOUIS A. CASGRAIN.

Witnesses:

FREDERICK L. EDMANDS,

M. LOUISE STEUTERMANN.

Copies of this patent may be obtained for five cents each, by addressing the "Commissioner of Patents, Washington, D. C."