Nov. 28, 1939. H. A. EVEREST ET AL 2,181,420

FOLDING PROPULSION WHEEL CHAIR

Filed Oct. 8, 1937 2 Sheets-Sheet 1

FIG. 1

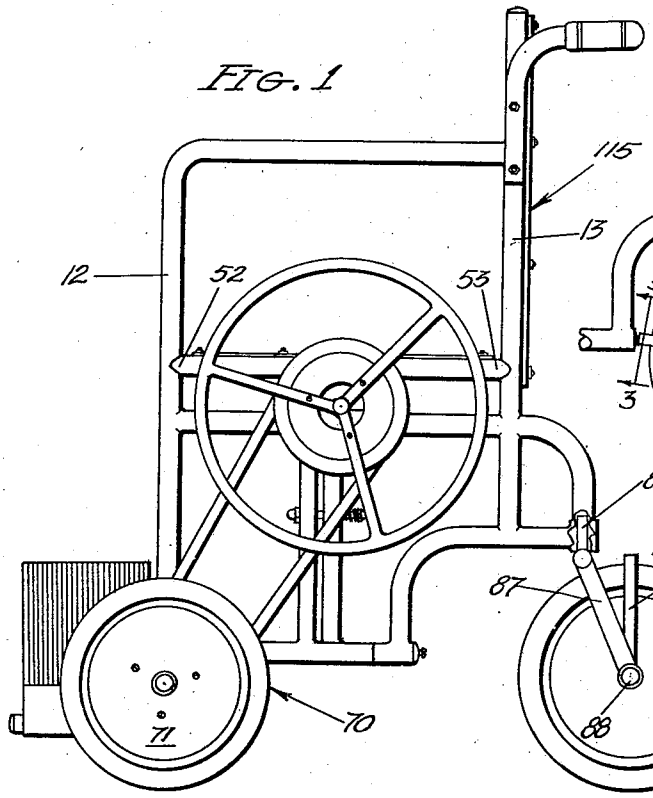

FIG. 2

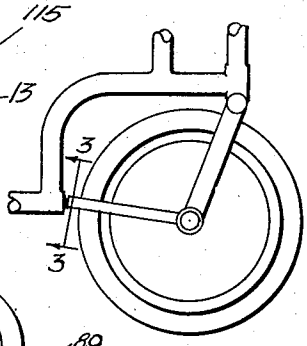

FIG. 3

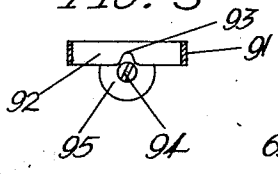

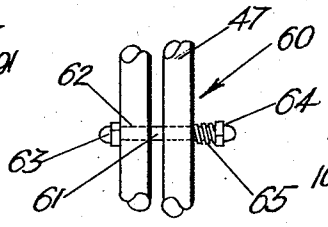

FIG. 4

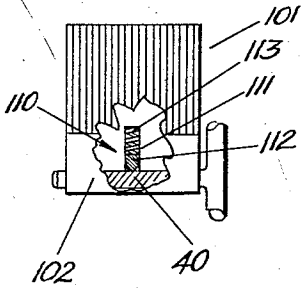

FIG. 6

FIG. 5

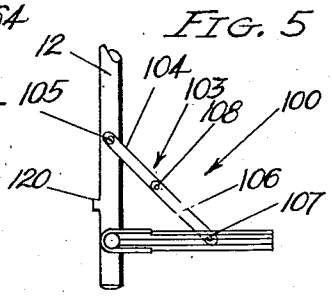

INVENTORS
Herbert A. Everest
Harry C. Jennings
BY Hazard and Miller
ATTORNEYS

Nov. 28, 1939. H. A. EVEREST ET AL 2,181,420

FOLDING PROPULSION WHEEL CHAIR

Filed Oct. 8, 1937 2 Sheets-Sheet 2

FIG. 7

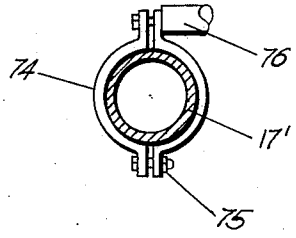

FIG. 8

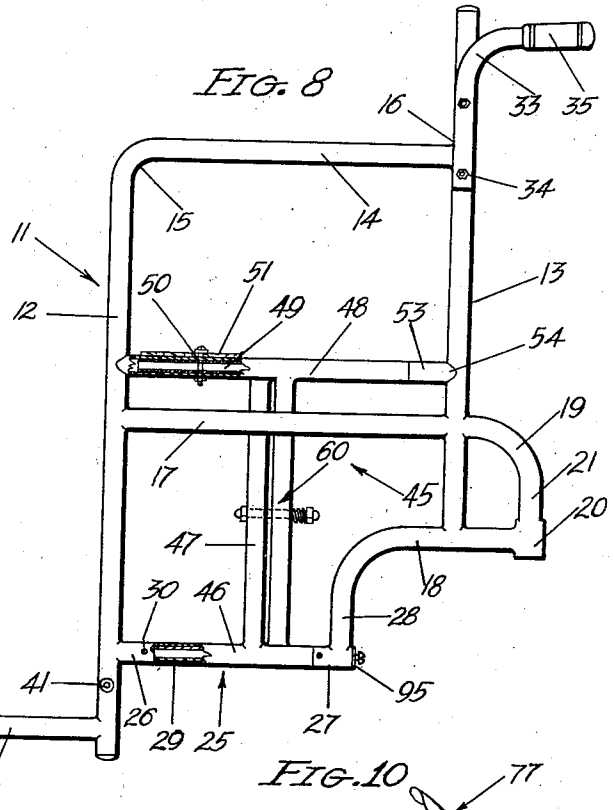

FIG. 9

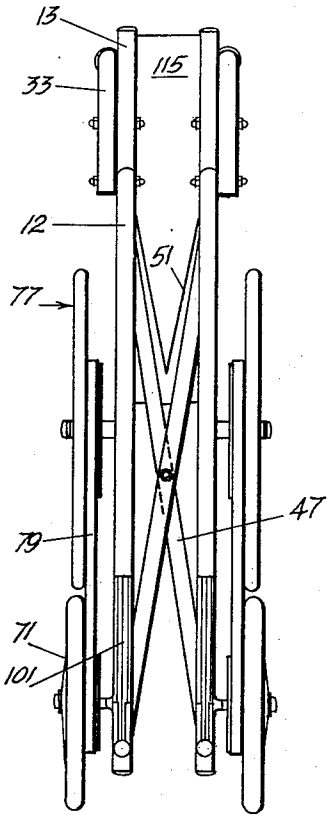

FIG. 10

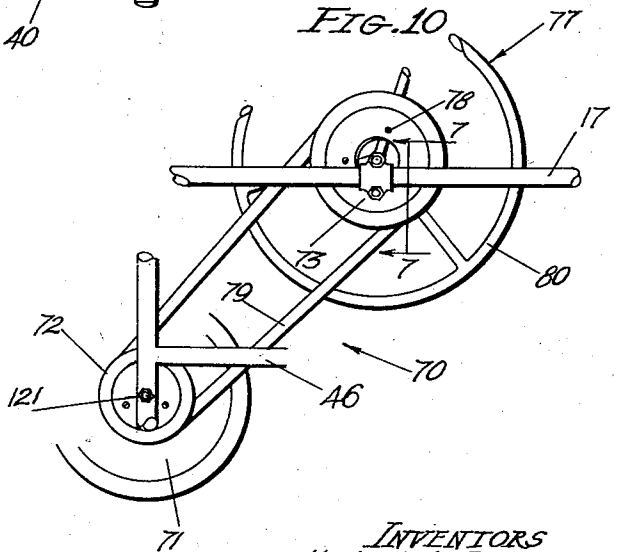

INVENTORS
Herbert A. Everest
Harry C. Jennings
BY Hazard and Miller
ATTORNEYS

Patented Nov. 28, 1939 2,181,420

UNITED STATES PATENT OFFICE

2,181,420

FOLDING PROPULSION WHEEL CHAIR

Herbert A. Everest and Harry C. Jennings,
Los Angeles, Calif.

Application October 8, 1937, Serial No. 167,986

13 Claims. (Cl. 280—250)

Our invention in this application refers particularly to the construction of a folding wheel chair with the propulsion device for operating driving wheels. This application may be considered as a further development of our patent application for Folding wheel chair, Ser. No. 63,340, filed February 11, 1936, matured to Patent No. 2,095,411, date, October 12, 1937. In the former application we disclosed the construction of a folding wheel chair with small diameter front drive wheels with a propelling mechanism which might be operated by the occupant of the chair. In the ordinary type of wheel chair which may be propelled by the occupant there are two quite large front wheels, the tread of which projects considerably forward of the chair proper and the legs of the occupant and therefore prevents the occupant from approaching closely to a table, desk or couch and many other places where he may desire to move. The advantages of having the small diameter front wheels therefore permit the chair to be rolled close to any article of furniture and facilitate the use of such a chair for an occupant shifting to and from an automobile.

One of the objects of our present invention is in the combination of a rigid side frame for each side of the chair with the small driving wheels mounted on a suitable axle. The drive is by means of pulleys in which the driving pulley is preferably actuated by a hand operated wheel, there being one on each side of the chair and adjustably mounted to regulate the tension on the belt or a drive sprocket chain.

Another object and feature of our invention as it relates to either operating the chair by the occupant or by an attendant involves a latching construction to lock the rear caster wheels in direct front to rear alignment so that the chair may only move in a straight line direction. This facilitates the movement of the chair by the occupant through short distances and also facilitates an attendant moving the chair with an occupant up and down steps, curbs or the like in that the swivelling action of the casters is prevented and the chair may be tilted on the two rear wheels which then act as if they were rigidly connected to the frame. Another detail feature of our invention to facilitate the occupant using the chair close to articles of furniture or the like involves movable foot rests each attached to its own side frame of the chair and which may be positioned horizontally as a foot rest or raised vertically to allow the occupant to place his feet on the floor and thus shift the chair or stand up if desired. This employs a folding brace holding the foot rests in their operative position and a friction means to retain these in any desired folded position.

Our invention is illustrated in connection with the accompanying drawings, in which:

Fig. 1 is a side elevation showing the relative position of the seat and the bottom when in use, one half of the foot rest however being illustrated as in an elevated or out of the way position.

Fig. 2 is a side elevation of one of the rear caster wheels in its locked position for straight line movement.

Fig. 3 is a partial section on the line 3—3 of Fig. 2 in the direction of the arrows showing the yoke of the caster wheel in position for latching.

Fig. 4 is a view of one of the foot rests in the elevated position partly broken away to illustrate the friction retainer.

Fig. 5 is a front elevation of part of the frame showing one of the folding foot rests.

Fig. 6 is an enlarged elevation of the central pivotal connection of the diagonal braces connecting the two side frames of the bar.

Fig. 7 is a detail section on the line 7—7 of Fig. 10 in the direction of the arrows showing the adjustable clamp for the driving pulley wheel.

Fig. 8 is a side elevation of the frame with the wheels removed.

Fig. 9 is a front elevation of the chair when in the folded position.

Fig. 10 is an elevation showing part of the frame and the propulsion drive for the front wheels.

Referring first to the construction of the frame and particularly to Fig. 8, there are two side frames designated by the numeral 11 in which we employ a front post 12, a back post 13, these preferably being made of metal tubing. The arm rest 14 is connected to the front post by the angular bend 15 and attached to the rear post at the point 16. A rigid intermediate bar 17 connects the front post and the rear post it being rigidly connected thereto. This is also formed of tubing. A rear bottom bar 18 is joined to the bottom of the rear post 13 and extends rearwardly thereof and is secured to an arcuate brace 19. This brace is attached to the rear post 13 preferably in alignment with the intermediate bar 17 and is connected to a hollow caster socket 20. A portion 21 of the brace above the socket is vertical to accommodate the spindle of a caster wheel, etc.

The front bottom bar assembly 25 includes a T branch tube 26 formed integral with the front post 12 adjacent its bottom and an L tube 27 at-

tached to the lower end portion 28 of the rear bar 18. A bearing tube 29 is fitted in the T 26 and the L 27 and rigidly secured thereto by screws 30. A handle bar 33 is secured to each of the rear posts 13 by screws 34 or the like and has a handle grip 35. Extending forwardly from adjacent the lower end of the front post 12 there is a pivot rod 40 for the foot rest and projecting sidewise from the post 12 adjacent the bottom is the axle 41 for the front wheel.

The diagonal frame assembly designated by the numeral 45 includes a lower sleeve 46 mounted on the rod 29 and having a snug fit between the T 26 and the L fitting 27. A diagonal brace 47 extends upwardly from each sleeve 46 being rigidly connected to the sleeve and has an upper longitudinal tube 48. In each of these tubes there is an inner bar 49 illustrated as being hollow and secured in position by bolts 50 which bolts also hold the fabric 51 which forms the seat and extends crosswise of the bar between the longitudinal tubes 48. Mounted on the ends of the rod 49 which projects beyond the ends of the tube 48 there is a front and a rear tube end 52 and 53, each of which has an open jaw end 54 partly encircling the front and rear posts 12 and 13 to direct the sliding movement in folding or collapsing the chair or extending this for use by spreading the side frames apart. By this construction it will be seen that the sleeve 46 rotates on the rod 29 in extending the side frames of the chair from the position of Fig. 9 to the extended position and vice versa. The tube 48 with the internal rod 49 develops a slight rotary action by the end pieces 52 and 53 having a straight vertical sliding motion on the posts 12 and 13.

In order to connect the two frames to provide a sufficient rigidity, yet to take care of a swivelling action, we employ a single pivot bolt assembly 60, note Figs. 6 and 8. This uses a long bolt 61 which passes with a close fit through perforations 62 in each of the diagonal braces 47. This bolt 61 is made of sufficient length so that the head 63 may engage one of the diagonal braces and the nut 64 be spaced from the other diagonal brace to provide a compression spring 65 reacting between the nut and the adjacent brace, the tension on the spring together with the reaction of the bolt therefore urges the two diagonal braces towards each other but allows sufficient play or working of the braces for a purpose more fully detailed hereunder.

The driving wheel assembly 70, note particularly Figs. 1 and 10, includes a small supporting wheel 71 mounted on the axle 41 for each frame, the wheel being on the outside of the frame and having a driven pulley 72. An adjustable clamp 73, note Figs. 7 and 10, includes two semi-circular clamp jaws 74 connected together by bolts 75. The upper bolt has an axle extension 76 on which is rotatably mounted the operating wheel 77 which wheel has the driving pulley 78 secured thereto. These pulleys are preferably designed to employ a V shaped drive belt 79. It will however be understood that sprocket wheels and sprocket chain may be utilized. It is to be noted that the clamp 73 is directly mounted on the intermediate bar 17 and is thus always a fixed distance from the traction wheel but the whole assembly of the operating wheel 77 and its pulley 78 may be adjusted longitudinally on this bar 17 to take up the slack of the belt or to make adjustments in this. It will be noted that the operating wheel has a peripheral rim 80 readily grasped by the hands of the user of the chair. This is approximately in the same position relative to the seat of the chair and to the arm rests as the hand grasp of a large wheel where the chair is provided with large wheels.

The rear or caster wheel assembly 85 preferably employs a wheel 86 of the same diameter as the traction wheel 71. All of these wheels are preferably provided with rubber tires. A swivel spindle yoke 87 forms a mounting for the axle 88 of the swivel wheel and a swivel stem 89 extends upwardly in the swivel socket 20 and the portion 21 of the brace 19, this being a usual construction, the caster swivel connection being such that this wheel assembly is properly secured to the frame of the chair on each side, the yoke being slightly inclined as regards the stem 89, the caster wheel follows in the direction of the turn of the chair and the movement of the chair. The locking assembly for each caster wheel designated by the numeral 90 employs a U shaped yoke 91 for each wheel, the yoke arms being rotatably mounted on the axle 88. The cross end 92 of the yoke has a notch 93 which engages an adjustable headed pin 94 which is secured in a plug 95 connected to the rear end of the L fitting 27. There is a friction fit of the arms of this yoke on the axle so that this yoke may occupy the upright position shown in Fig. 1, for instance when a chair is being moved in a forward direction. However to lock the caster wheels these wheels are swivelled to occupy the position of Fig. 2, the yoke 91 is rotated on the axle 88 until the notch 93 engages the head of the pin 94. This locks the caster wheels in a straight front to rearward position and preferably in direct alignment with the traction wheels, thus the chair can only move in a straight line direction forwardly or rearwardly. On account of having the caster wheels locked, an attendant may readily move the chair with its occupant up or down steps or a curb or over or past various obstructions which would be difficult to move the chair if the caster wheels were not locked.

The foot rest assembly 100, note particularly Figs. 4 and 5, employs two distinct rests both constructed the same. Each has a foot board 101 with a U shaped plate 102 secured thereto at one end and encircling the foot rest pivot rod 40. A folding brace 103 has an upper section 104 pivoted at 105 to the post 12 and a lower section 106 pivoted at 107 to the floor board, these sections being pivotally connected by a central pivot 108. This brace may then fold to allow the foot rest board to occupy the horizontal position of Fig. 5 or the vertical positions of Figs. 1 and 9. A friction device 110 employs a recess 111 in the foot board, this having a friction plug 112 fitted therein and pressed outwardly by a compression spring 113. The plug bears against the foot rest rod 40 and thus develops a frictional resistance, holding this in its upright position.

It will be noted by the position of the foot rests that these are quite close to the ground. Their pivot rods are positioned below the axle 41 of each of the traction wheels. The tread or tire of these wheels does not project forwardly of the line of the foot rests. Therefore a chair of our construction with the occupant therein may be moved close to an article of furniture, that is, until the foot rest or the feet of the occupant engage such article. This brings the seat of the chair close to such article of furniture or for instance the side of an automobile so that the occupant may readily shift from the chair. It also

allows the occupant to use the chair while writing at an ordinary desk. A further advantage of having each foot rest separate and held upright by a friction device is that the occupant may readily manipulate these and by raising them can brace the feet on the floor, thus propelling the chair or obtaining a certain amount of exercise. The latching yoke 91 is in such a position that the occupant of the chair may reach downwardly and latch or unlatch this device to clamp the caster wheels or to unclamp these for the ordinary movement of the chair. The back 115 of the chair is formed of fabric, the sides being connected to the two rear posts 13. It will however be understood that a removable back such as described in our prior patent application may be utilized.

The axle assembly 41 has the axle for the traction wheel removably attached to the front post 12. The assembly employs a substantial tubular boss or similar piece 120, note Fig. 5, which forms a reinforcement for the tube 12 and projects slightly on the outside of the tube. The axle 41 extends through this boss and is secured by a nut 121 on the inside of the post, note Fig. 10.

The somewhat loose connection at the single pivot bolt assembly 60 of the diagonal braces 47 allows a twist or warp of the two side frames of the chair when the wheels on one side for instance meet an obstruction or depression. This allows the traction wheels to always maintain a sufficient contact with the surface over which the chair operates so that the occupant may have sufficient traction to propel the chair manually where an attendant is not wheeling the chair. On account of the diagonal braces 47 being normally spaced apart, this warping permits the two braces to approach until they contact and they may also spread apart a greater distance permitted by the length of the pivot bolt 61 and the spring 65. Of course this warping or twisting of one side of the chair relative to the other does not permit the chair to operate over large obstructions or depressions but it is quite satisfactory for those usually encountered in the ordinary use of the chair. On account of the long sleeves 46 and 48 on the end of the diagonal braces and the close fitting connection which prevents a longitudinal sliding of these sleeves on their supporting rods, the chair has sufficient stiffness while developing the flexibility substantially equal to that of the chair of our patent application and patent above mentioned.

Various changes may be made in the details of the construction without departing from the spirit or scope of the invention as defined by the appended claims.

We claim:

1. A wheel chair comprising in combination two side frames each having a front and rear post, a bottom bar assembly with a connecting means therefor to both posts for each frame, a lower sleeve rotatably mounted on each bottom bar assembly and restricted from longitudinal sliding, an upper longitudinal tube, front and rear tube ends rotatably mounted on each upper tube and slidably engaging the front and rear posts, a single diagonal brace extending between the sleeve on one frame to the longitudinal tube on the other frame, a single pivot bolt connecting the two diagonal braces, the said bolt being of sufficient length to allow relative longitudinal movement on the bolt of the said braces, a pivot rod connected to each side frame and extending forwardly, a foot rest board pivotally mounted on each pivot rod, a folding brace connecting each board to the adjacent frame whereby the board may occupy a horizontal position to support an occupant's feet or be folded to an upright position for collapsing of the chair.

2. A wheel chair having rigid longitudinally extending side bars one on each side, a small traction wheel mounted on each side of the chair in a forward position, an operating wheel having an adjustable mounting on a longitudinal side bar, there being an operating wheel on each side of the chair and a driving connection from each operating wheel to each traction wheel.

3. In a wheel chair having a swivel caster wheel with an axle, a swivel yoke mounted on the axle, an interengaging means on a portion of the chair to latch the said yoke to position the caster wheel in a straight line front to rear position relative to the chair.

4. In a wheel chair having a pivot rod positioned horizontally, a foot rest board pivotally mounted on said rod, said board having a recess, a friction plug and a spring in the recess, the plug engaging the rod, and a folding type of bracket connecting the board to a part of the chair whereby the board may be retained in a horizontal position by the said bracket or retained in a vertical position by the action of the friction plug on the pivot rod.

5. A wheel chair having two similar side frames with a connecting structure to retain said frames a fixed distance apart for operation as a chair and with a seat mounted between the frames, a displaceable foot board secured to each side frame and projecting forwardly of the seat, whereby the occupant may rest his feet on such boards or displace the boards to propel the wheel chair by the feet, a small diameter traction wheel mounted in a fixed position on each side frame with the forward portion of the periphery of the wheel spaced rearwardly from the front of the foot board, a caster swivelly mounted on each side frame at the rear portion thereof, an operating wheel secured to each side frame in a position to be grasped by the hand of the occupant of the chair, and a drive connection from the operating to the traction wheel on each side.

6. A wheel chair having two similar side frames with a connecting structure to retain said frames a fixed distance apart for operation as a chair and with a seat mounted between the frames, a displaceable foot board secured to each side frame and projecting forwardly of the seat, whereby the occupant may rest his feet on such boards or displace the boards to propel the wheel chair by the feet, a small diameter traction wheel mounted in a fixed position on each side frame with the forward portion of the periphery of the wheel spaced rearwardly from the front of the foot board, a caster swivelly mounted on each side frame at the rear portion thereof, an operating wheel attached to each side frame by a longitudinally movable attachment for a direct front to rear movement whereby the operating wheel may be positioned to be conveniently grasped by an occupant of the chair and a drive connection from the operating wheel to the traction wheel.

7. A wheel chair having two similar side frames with a connecting structure to retain said frames a fixed distance apart for operation as a chair and with a seat mounted between the frames, a displaceable foot board secured to each side frame and projecting forwardly of the seat whereby the occupant may rest his feet on such boards or displace the boards to propel the wheel

chair by the feet, a small diameter traction wheel mounted in a fixed position on each side frame with the forward portion of the periphery of the wheel spaced rearwardly from the front of the foot board, a caster swivelly mounted on each side frame at the rear portion thereof, each side frame including a longitudinal bar positioned parallel to but below the seat, an operating wheel attached to each longitudinal bar by an adjustable clamp whereby such wheel may be positioned convenient to be grasped by the occupant of the chair and a drive connection between the operating and the traction wheel on each of the side frames.

8. A wheel chair having two similar side frames with a connecting structure to retain said frames a fixed distance apart for operation as a chair and with a seat mounted between the frames, a displaceable foot board secured to each side frame and projecting forwardly of the seat whereby the occupant may rest his feet on such boards or displace the boards to propel the wheel chair by the feet, a small diameter traction wheel mounted in a fixed position on each side frame with the forward portion of the periphery of the wheel spaced rearwardly from the front of the foot board, a caster swivelly mounted on each side frame at the rear portion thereof, an operating wheel secured to each side frame in a position to be grasped by the occupant of the chair, a driving connection from the operating wheel to the traction wheel, the swivel caster of each side frame having an inclined spindle yoke and an attaching means for locking the caster wheel with the yoke inclined forwardly to each side frame to align the traction and caster wheels in a front to rear direction.

9. A wheel chair having two side frames with a connecting structure to retain the frames a fixed distance apart, a seat mounted between the frames, a traction wheel of small diameter having its axle mounted on a side frame substantially below the front edge of the seat, a displaceable foot board secured to each side frame positioned forwardly of the axle of the wheel, the foot board being displaceable whereby the person sitting on the seat may propel the wheel chair by his feet, each side frame having a caster wheel at the rear, the vertical line through the center of gravity of a person sitting on the seat being always rearwardly of the axle of the traction wheels, and means to lock each caster wheel in a front to rear direction.

10. A wheel chair having two side frames with a connecting structure to retain the frames a fixed distance apart, a seat mounted between the frames, a traction wheel of small diameter having its axle mounted on a side frame substantially below the front edge of the seat, a displaceable foot board secured to each side frame positioned forwardly of the axle of the wheel, the foot board being displaceable whereby the person sitting on the seat may propel the wheel chair by his feet, each side frame having a caster wheel at the rear, the vertical line through the center of gravity of a person sitting on the seat being always rearwardly of the axle of the traction wheels, an operating wheel having its axle adjustably mounted in a front to rear direction on each side frame and a drive connection from each operating wheel to the traction wheel on the same frame.

11. A wheel chair having two side frames with a pair of diagonal cross braces connecting the side frames, a connecting means between the diagonal braces permitting a twist or warping of one frame relative to the other, a small diameter traction wheel secured to each side frame at a forward position and a caster wheel secured to each side frame at a rear position, a seat between the frames, a drive means operable by the occupant of the seat to actuate the traction wheels, the connection between the diagonal braces providing for the traction wheels being both always in contact with the ground should one wheel engage a slight elevation or be over a slight depression in the ground.

12. A chair having two side frames with a pair of diagonal braces connecting the side frames, a seat loosely connected between the side frames and a small diameter traction wheel having its axle secured to each side frame at a position substantially vertically below the forward edge of the seat, a caster wheel mounted on each side frame at a rear position, a displaceable foot rest secured to each side frame forwardly of the axle of the traction wheel whereby the foot rest may be displaced for propulsion of the chair by the person sitting on the seat, an operating wheel adjustably mounted in a front to rear direction on each side frame, a drive connection from the operating wheel to the traction wheel on the same side, a longitudinal pivotal connection between the diagonal braces at their intersection having means permitting a twist or warping of one frame relative to the other whereby both of the traction wheels may be always in contact with the ground should one wheel engage a slight elevation or be over a slight depression in the ground.

13. A chair having two side frames with a pair of diagonal braces connecting the side frames, a seat loosely connected between the side frames and a small diameter traction wheel having its axle secured to each side frame at a position substantially vertically below the forward edge of the seat, a caster wheel mounted on each side frame at a rear position, a displaceable foot rest secured to each side frame forwardly of the axle of the traction wheel whereby the foot rest may be displaced for propulsion of the chair by the person sitting on the seat, an operating wheel adjustably mounted in a front to rear direction on each side frame, a drive connection from the operating wheel to the traction wheel on the same side, a longitudinal pivotal connection between the diagonal braces at their intersection having means permitting a twist or warping of one frame relative to the other whereby both of the traction wheels may be always in contact with the ground should one wheel engage a slight elevation or be over a slight depression in the ground, each caster wheel having a vertical pivot connecting such wheel to its side frame with a spindle yoke forming an obtuse angle with the vertical pivot whereby the spindle yoke may be inclined forwardly and means to latch each caster wheel with the spindle yoke inclined forwardly to its side frame with the plane of the wheel in a front to rear direction.

HERBERT A. EVEREST.
HARRY C. JENNINGS.