United States Patent [19]

Wellendorf et al.

[11] **3,816,698**

[45] **June 11, 1974**

[54] **ARRANGEMENT FOR PRODUCING SCREENED PRINTING FORMS, SUCH AS PRINTING CYLINDERS, BY MEANS OF AN ELECTRON BEAM**

[75] Inventors: **Klaus Wellendorf,** Kitzeberg; **Peter Padberg,** Preetz; **Bernd Struck,** Kiel, all of Germany

[73] Assignee: **Dr. Ing. Rudolf Hell GmbH,** Kiel, Germany

[22] Filed: **Feb. 13, 1973**

[21] Appl. No.: **332,129**

[30] **Foreign Application Priority Data**

Feb. 15, 1972 Germany 2207090

[52] **U.S. Cl.** ..... **219/121 EB**

[51] **Int. Cl.** **B23k 15/00**

[58] **Field of Search** ..... 219/121 EB, 121 EM; 250/491, 492, 427; 90/13 R

[56] **References Cited**

UNITED STATES PATENTS

3,402,278 9/1968 Dernbach ..... 219/121 EB

Primary Examiner—J. V. Truhe
Assistant Examiner—G. R. Peterson
Attorney, Agent, or Firm—Ernest F. Marmorek

[57] **ABSTRACT**

An engraving apparatus for producing a printing matrix such as a printing cylinder including an electron beam producing device having a vacuum chamber opened at its end facing the cylinder and forming a gap with it, the device is adapted to more over the cylinder surface to perform the engraving operation, an end member attached to both ends of the cylinder to assure that the vacuum is not lost by the beam producing device when the engraving is performed at both ends of the cylinder, the end members forming a surface continuity with the cylinder and are removable after the engraving has been performed.

8 Claims, 2 Drawing Figures

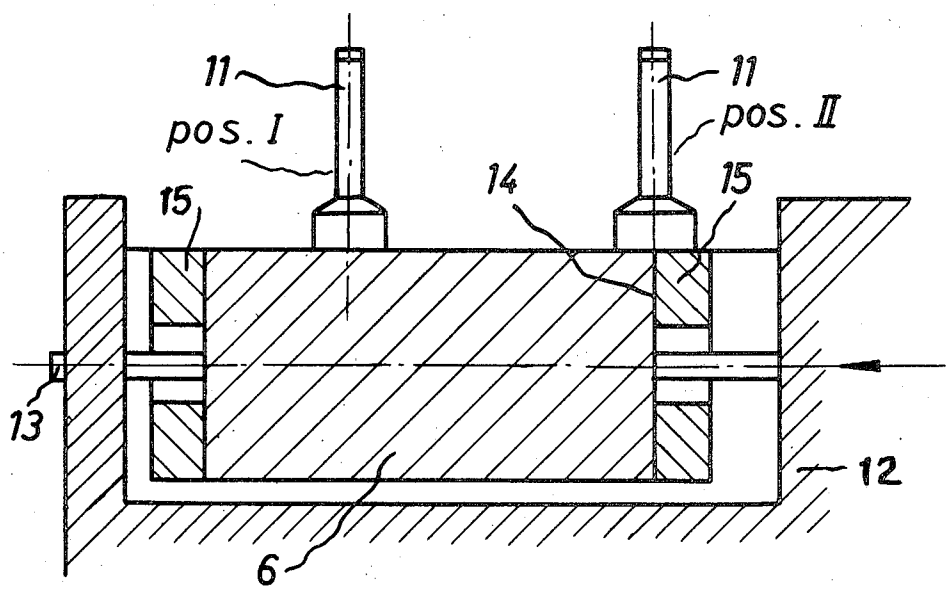

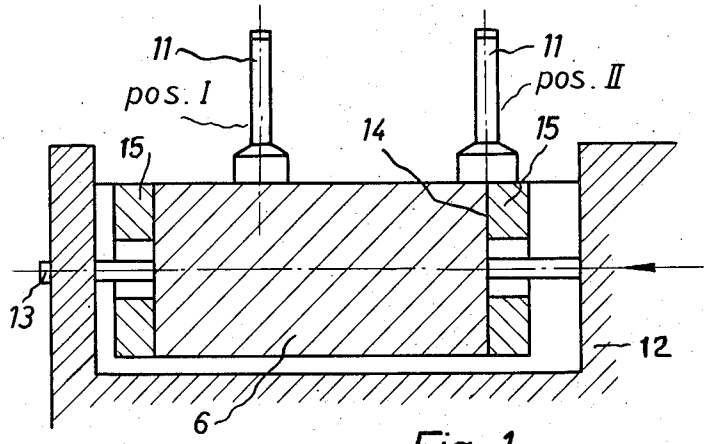

Fig. 1

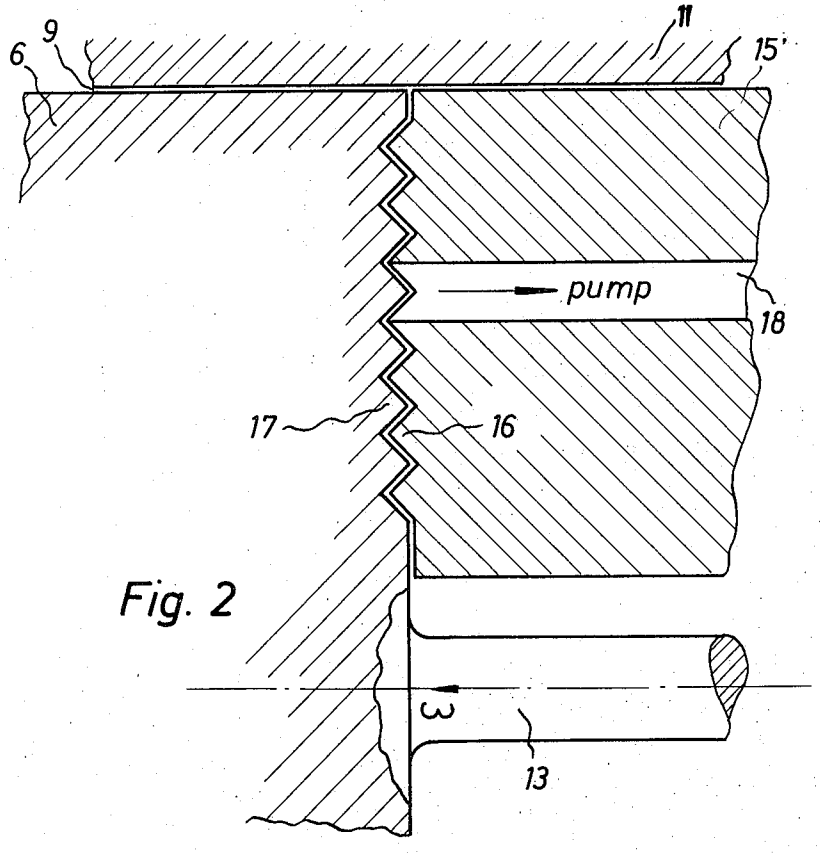

Fig. 2

ARRANGEMENT FOR PRODUCING SCREENED PRINTING FORMS, SUCH AS PRINTING CYLINDERS, BY MEANS OF AN ELECTRON BEAM

CROSS-REFERENCE TO RELATED APPLICATION

Reference is had to our co-pending application, Ser. No. 332,128 filed Feb. 13, 1973.

FIELD OF THE INVENTION

The present invention relates to an arrangement for producing screened printing matrices, especially printing cylinders, by means of an electron beam in which the system producing the electron beam is placed in a vacuum chamber which is open in the direction of the upper surface of the printing matrix and, which forms an air gap with the upper surface of the printing matrix and the device with the vacuum chamber and/or the printing matrix are arranged to produce a relative movement between the vacuum chamber and the printing matrix while retaining the gap therebetween.

BACKGROUND OF THE INVENTION

In the printing industry it has already been known in producing screened printing matrices from the upper surface of a printing form which originally was unprocessed by using a raster so that cup-shaped recesses are engraved into the upper surface of the printing cylinder following the printing raster and, in which the depth or the volume of the cup-shaped engravings in the upper surface of the printing cylinder were given dimensions which represent the tone value which is to printed thereby. During the engraving the depth, that is, the volume of the cup-shaped engravings is controlled by the density values obtained through the electron-optical scanning of an original picture set or form which is to be reproduced, such as explained in the Application of Hans Keller et al, Ser. No. 124,864, filed Mar. 16, 1971 entitled Method For Electro-Optical Reproduction of Half-Tone Pictures and assigned to the same assignee as the present application.

For the production of the cup-shaped engravings there are several methods known according to which by means of the electronic control of the engraving instrument an appropriate quantity of material is removed from the upper surface of the printing matrix or cylinder. This can be performed by means of a cutting tool, such as a diamond stylus, the depth of penetration of which into the upper surface of the printing form or cylinder is controlled. Such method operates very cleanly. It has, however, its disadvantage in that the engraving speed due to the mechanical process of the engraving cannot meet the ever increasing requirements as to speed, in the graphic art industry.

Another method became known according to which the cup-shaped engravings are produced on the printing cylinder by means of an exactly focused and controlled laser beam. Such method is not practical with the presently available techniques and, at the same time, it produces an unsatisfactory printing quality.

According to a recent discovery, a method is used which employs an electronic beam, as the engraving means, with which one is able to produce the necessary cup-shaped engravings reliably and, with a desired speed. This method and the associated apparatus for practicing the method generally resides in that for the processing of an object according to a desired reproduction plan, by means of a charge carrying beam the picture is recorded. More particularly, the picture is recorded by means of a TV camera and during the recording the deflecting signals used for controlling the scanning beam of the TV camera tube are used simultaneously for the synchronized deflection of the charge carrying beam which is processing the object to be reproduced. At the same time the video-signals delivered from the TV camera are used to control the intensity of the charge carrying beam falling on the object under processing. With the help of such method satisfactory CUP-shaped engravings can be made, however, one cannot attain a desirable engraving speed notwithstanding the fact that the electronic beam can be very quickly deflected within a vacuum chamber into which the workpiece is also placed. It has been found that only very few cup-shaped engravings can be made, since in the apparatus proposed by such method the advancing of the printing matrix or cylinder is slow. Probably a speed could be attained with such method if the vacuum chamber would be dimensioned so large that the printing matrix could be passed within the vacuum chamber with a desired speed in front of the system producing the electron beam. This would, however, require an enormous out-lay respecting the size of the vacuum chamber, since the printing cylinder has a length of several meters and also a large diameter. Also the mounting and removal of the printing cylinder into and out of the vacuum chamber would require long idle machine times, to which the time required for the evacuation of the chamber is still to be added.

Also a further engraving system has been proposed in which the electron beam producing system is placed within a bell-shaped vacuum chamber which is open in the direction facing the upper surface of the printing cylinder and, which forms a gap with the upper surface of the printing cylinder. However, such a proposed arrangement, is not adapted to perform engraving operations up to the edge regions of the printing cylinder, that is, all the way to the edge at which the cylinder surface and the end sides of the cylinder meet, since a loss of the vacuum would take place at that region. As a result, a very considerable part of the upper surface of the cylinder remains unused. In addition, such a method would require an unnecessary widening of the printing machine and also would cause an increase of the cost of the engraving apparatus itself.

SUMMARY OF THE INVENTION

It is, therefore, an object of the present invention to provide an improved engraving system for producing a screened printing matrix by means of an electron beam, which system eliminates the above described shortcomings of known methods and systems and, in which the printing matrix can undergo the engraving process without being built into a vacuum chamber. In which also the engraving with an electron beam can be performed all the way to the edge portions of the printing matrix or cylinder.

According to the present invention, a member is attached at the edge portions of the printing matrix or cylinder which extends the cylindrical surface of the printing matrix or cylinder under the engraving process.

As a result, by using the engraving system according to the present invention, the electron beam of which is located in the center portion of a bell-shaped vacuum

system, one may perform the engraving operation all the way to the edge portions of the printing matrix or cylinder without the danger of loosing the vacuum of the beam producing device.

It is a preferred feature of the present invention that the member attached to the printing matrix or cylinder is dimensioned to follow the curvature of the surface of the printing matrix or cylinder.

Preferably, the member which is attached to the printing matrix is in the shape of a ring which is coupled gas-tight with each end of the printing matrix or cylinder or it is arranged fixedly on the frontal surface of the printing matrix or cylinder by enclosing a gap therewith.

The invention also provides that the member which is attached to the printing cylinder contains at least one, but preferably a plurality of passages therein for removing the air from between the printing cylinder and the member of attachment.

DESCRIPTION OF THE DRAWINGS

The present invention will become more readily apparent from the following description of preferred embodiments thereof shown in the accompanying drawings, in which:

FIG. **1** is a schematic representation, partially in section, of the structural arrangement of the engraving system according to the present invention;

FIG. **2** is a partial sectional view of a broken away portion of the printing form or cylinder illustrating one form of the coupling of the attachment member thereto.

DESCRIPTION OF THE PREFERRED EMBODIMENTS

With reference to FIG. **1**, an electron-beam engraving system **11** is illustrated in two different positions I and II with respect to a printing cylinder **6** which is under the process of being engraved and, which is supported in a machine stand **12** on an axle **13** for rotation and is driven by a fine drive system not shown in the drawing to avoid a crowding of the drawing with matters which do not form part of the present invention. In order that the engraving system **11** which, as illustrated in its position I, is completely sitting over the surface of the cylinder **6**, could perform the engraving operation up to the edge **14** of the cylinder **6** without experiencing the loss of the vacuum in it, according to the present invention a ring-shaped member **15** is attached to both ends thereof, which represents at each end a continuity or extension of the cylindrical surface of the cylinder **6**. Such a member **15**, as it can be seen in FIG. **1**, is secured by means of bolts or other convenient securing means to the front or end surfaces of the printing cylinder **6** in a gas-tight manner and, rotates with the cylinder **6** itself. After finishing the engraving operation, it is disengaged and removed so that the printing cylinder **6** will assume its original and normal length used in the printing process.

With respect to the details of a preferred construction of the engraving system **11** reference should be had to our copending patent application Ser. No. 332,128, filed Feb. 13, 1973.

With reference to FIG. **2** illustrating another embodiment of the attachment members **15**, it is seen that such members **15'** are each in the form of a member fixedly mounted to stand **12** within the engraving apparatus and, which also serves to extend the cylindrical surface of the printing cylinder **6** during the engraving process. Te member **15'** on its frontal surface with which it faces the printing cylinder **6**, is provided with a plurality of recesses **16** on its upper surface which are provided in a symmetrical fashion and concentrically with respect to the axle of the rotation **13**. Te recesses **16** matingly face corresponding recesses and protrusions **17** made in the printing cylinder **6**. The mounting of the printing cylinder **6** and the attachment member **15'** is such that a gap is formed between the printing cylinder **6** and the members **15'** and, which is evacuated through a passage **18** by means of a vacuum pump coupled thereto and which is not shown to avoid crowding of the drawing. As a result, there is formed a constant gap line which extends over to the surface of the cylinder **6** over its edge portions and, the vacuum is retained within the engraving system **11** even when the engraving system **11** is in its shown position in FIG. **2** which is identified by II in FIG. **1**.

It should be noted that at both edges or front surfaces of the printing cylinder **6** such attachments **15, 15'** are provided, respectively, in each embodiment. The gap line between the stationary members **15'** and the cylinder **6** can take other forms than the illustrated Zig-Zag form. It can be a simple straight gap, which makes the machining of the end plates of the printing cylinder **6** much simpler. When several suction pipes **18** are provided at different radii of the cylinder **6**, than the advantage is attained that by performing the removing of the air from the gap at steps, one may obtain a graduated vacuum.

I wish it to be understood that I do not desire to be limited to the exact details of construction shown and described, for obvious modifications will occur to a person skilled in the art.

Having thus described the invention, what I claim as new and desire to be secured by Letters Patent, is as follows:

1. An apparatus for producing screened printing matrices on a printing matrix, comprising, in combination:

Engraving means including a vacuum chamber having a reduced pressure and having an opening defined therein in the part thereof in the direction of the upper surface of the printing matrix and electron beam means for producing an electron beam for performing the engraving operation on the printing matrix, said electron beam means being located within said vacuum chamber, said electron beam being directed towards the opening of said vacuum chamber, said engraving means and said printing matrix defining a gap therebetween with the upper surface of the printing matrix forming a partial closure of the opening in said vacuum chamber, moving means for causing a relative movement between said printing matrix and said engraving means while retaining said gap therebetween, said printing matrix having two opposite end edge portions, and two end members removably attached to each of said respective end edge portions to serve as an extension of the upper surface of said printing matrix during the engraving process whereby the engraving operation on the printing matrix can be performed to each of said end edge portions while maintaining said partial closure of the opening in said vacuum chamber.

2. The apparatus as claimed in claim **1** wherein each of said end members is a ring-shaped member coupled

to each said end edge portions of said printing matrix in gas-tight fashion.

3. The apparatus as claimed in claim **1**, wherein means are provided for coupling said end members to said respective end edge portions of said printing matrix and maintaining the gap between said printing matrix and each of said end members.

4. The apparatus as claimed in claim **3**, wherein each of said member has provided therein at least one passage for removing the air from the gap between the engraving means, the printing matrix and said members.

5. The apparatus as claimed in claim **3**, wherein said gap is straight and elongated and has dimensions for retaining the vacuum during the engraving process between said engraving means, said printing cylinder, and said members.

6. The apparatus as claimed in claim **3**, wherein said gap has a Zig-Zag form and has dimensions for retaining the vacuum during the engraving process between said engraving means, said printing cylinder and said members.

7. The apparatus as claimed in claim **3**, wherein said printing matrix is a printing cylinder, and said moving means comprises means for mounting said printing cylinder for rotation about an axle and means for moving said engraving means over the surface of said cylinder, said end members being fixedly mounted against rotation with respect to said printing cylinder.

8. The apparatus as claimed in claim **1**, wherein said printing matrix is a printing cylinder mounted for rotation about an axle, and said moving means comprises means for laterally moving said engraving means over the upper surface of said printing cylinder from one of said edge portions to the other of said edge portions, said end members being fixedly mounted for rotation with said printing cylinder.

* * * * *