April 30, 1929. J. FLIEDNER 1,710,817

METHOD AND APPARATUS FOR PILING FIBROUS MATERIAL

Filed Jan. 2, 1926 8 Sheets-Sheet 1

Fig. 1.

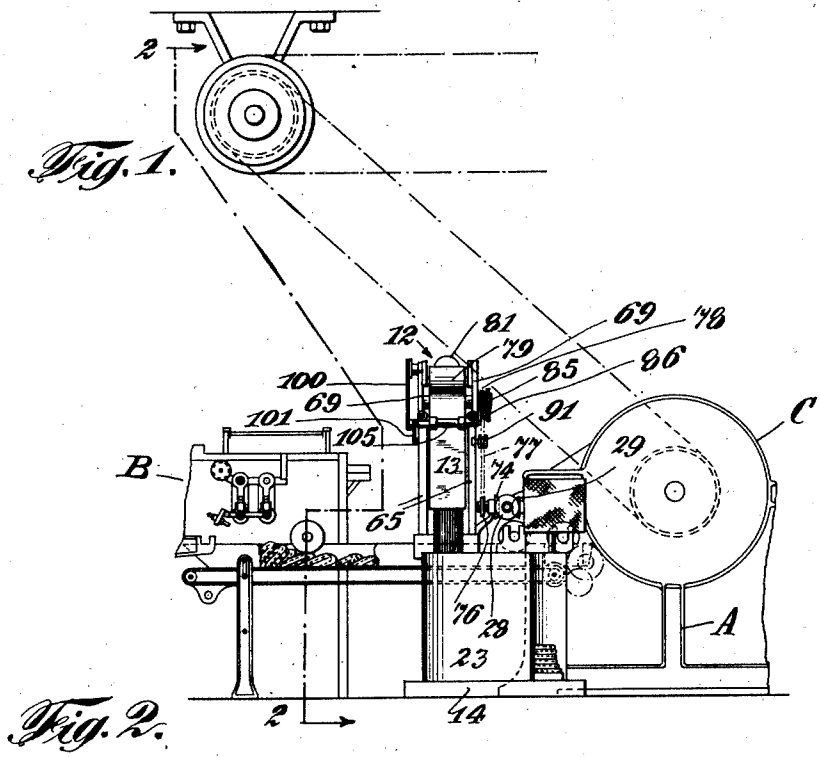

Fig. 2.

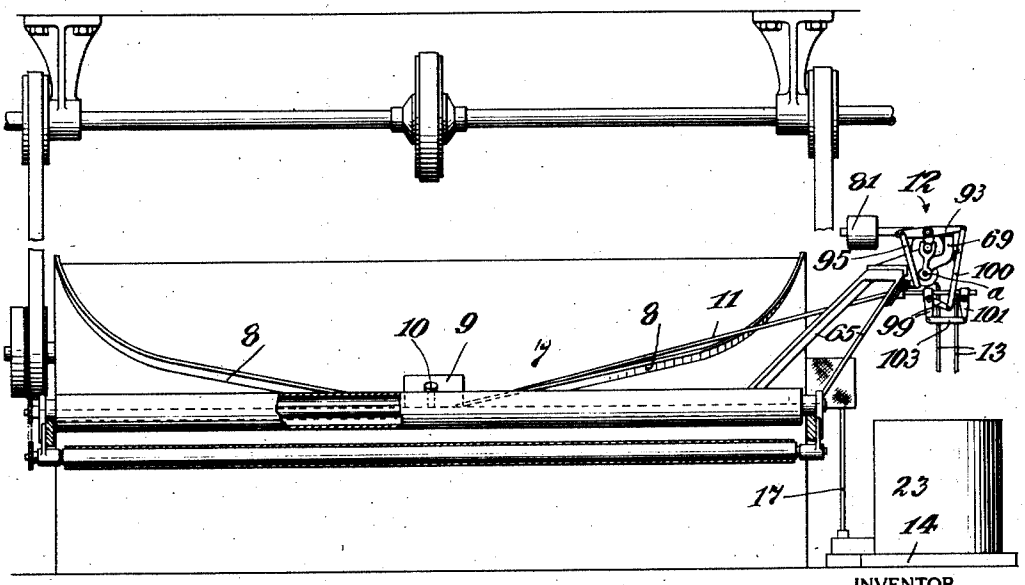

INVENTOR
John Fliedner
BY
Macdonald & Macdonald,
his ATTORNEYS

April 30, 1929. J. FLIEDNER 1,710,817

METHOD AND APPARATUS FOR PILING FIBROUS MATERIAL

Filed Jan. 2, 1926 8 Sheets-Sheet 2

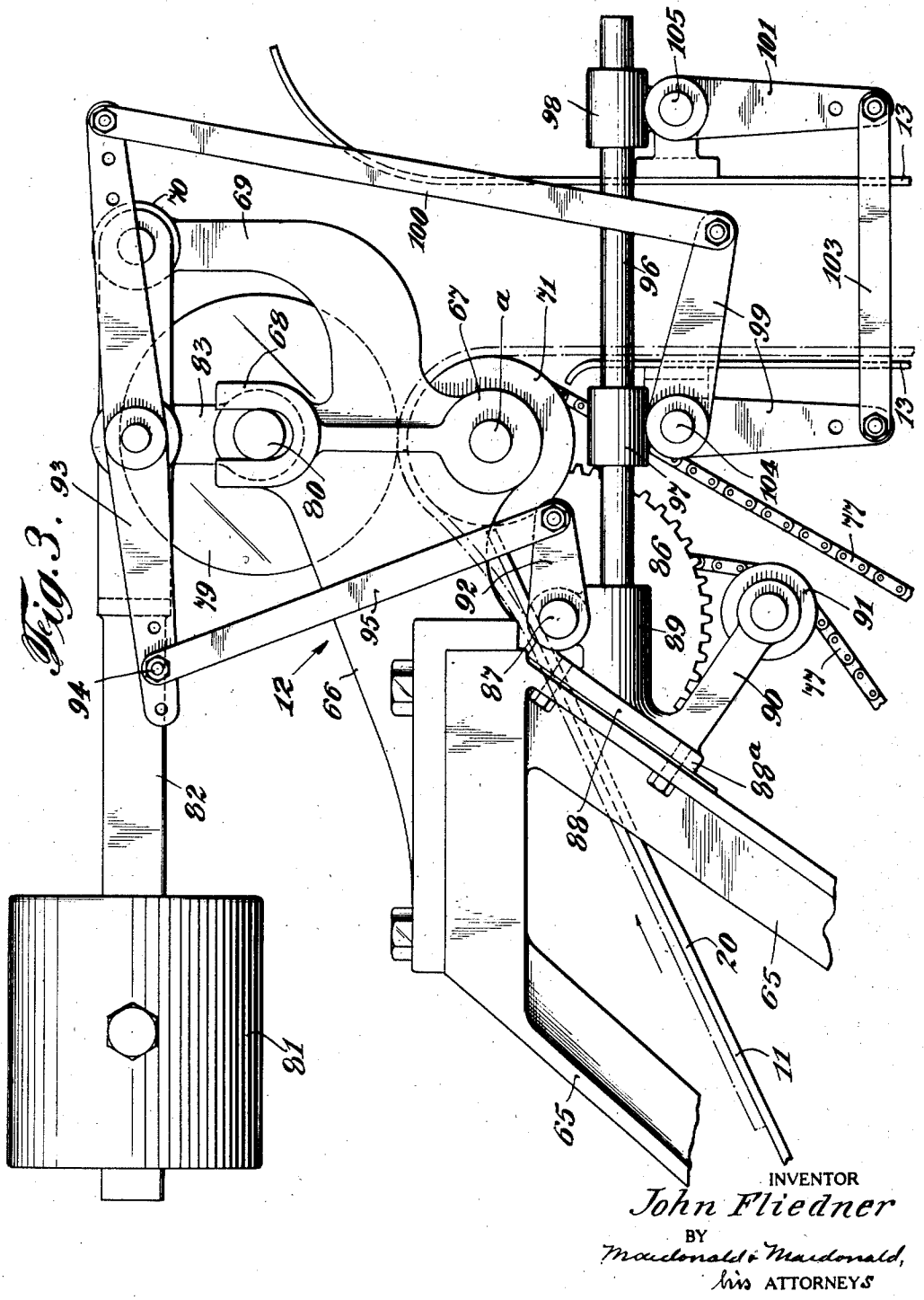

Fig. 3.

INVENTOR
John Fliedner
BY
Macdonald & Macdonald,
his ATTORNEYS

April 30, 1929. J. FLIEDNER 1,710,817

METHOD AND APPARATUS FOR PILING FIBROUS MATERIAL

Filed Jan. 2, 1926 8 Sheets-Sheet 3

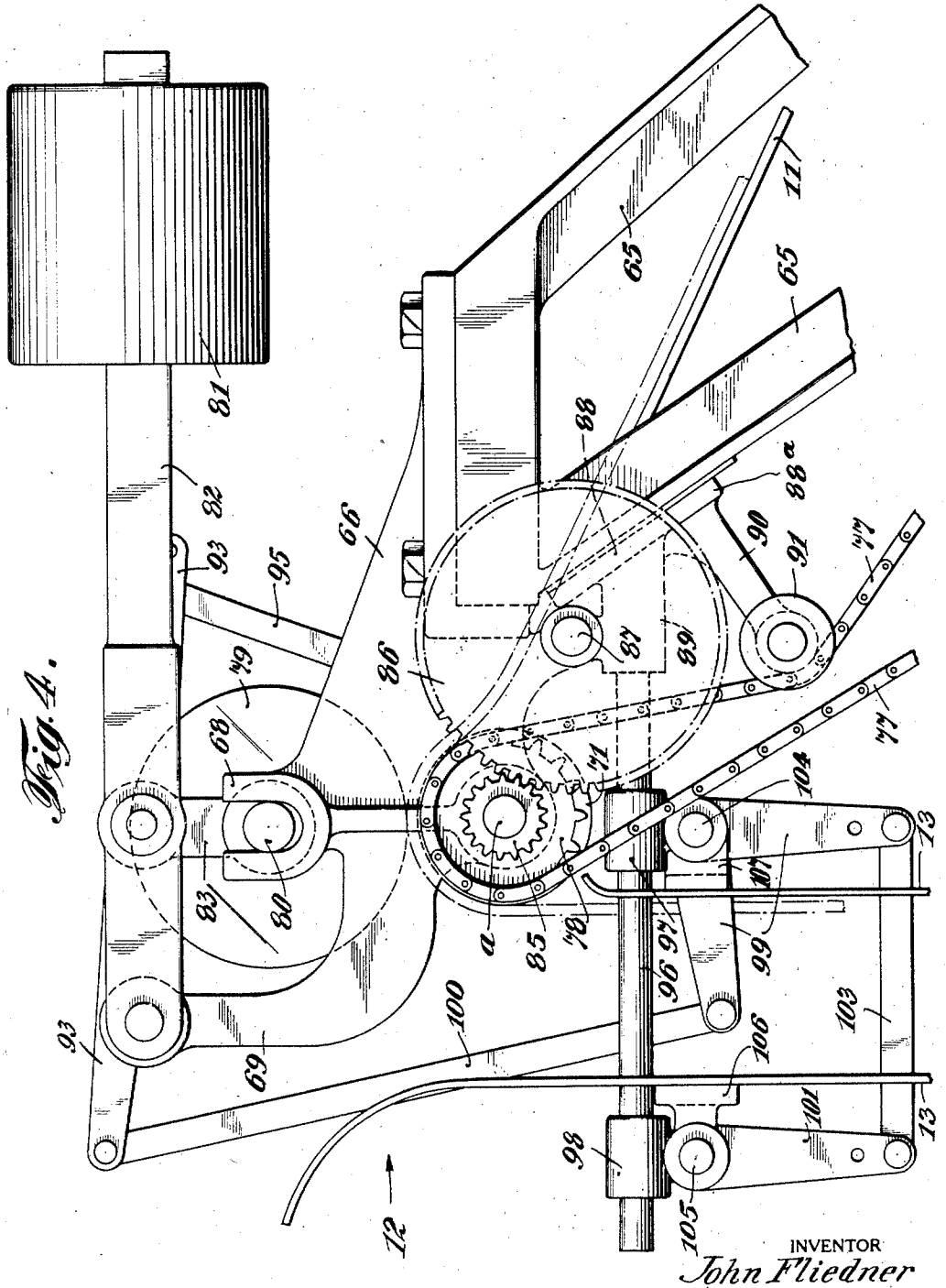

Fig. 4.

INVENTOR
John Fliedner
BY
Macdonald & Macdonald,
his ATTORNEYS

April 30, 1929. J. FLIEDNER 1,710,817

METHOD AND APPARATUS FOR PILING FIBROUS MATERIAL

Filed Jan. 2, 1926 8 Sheets-Sheet 4

Fig. 5.

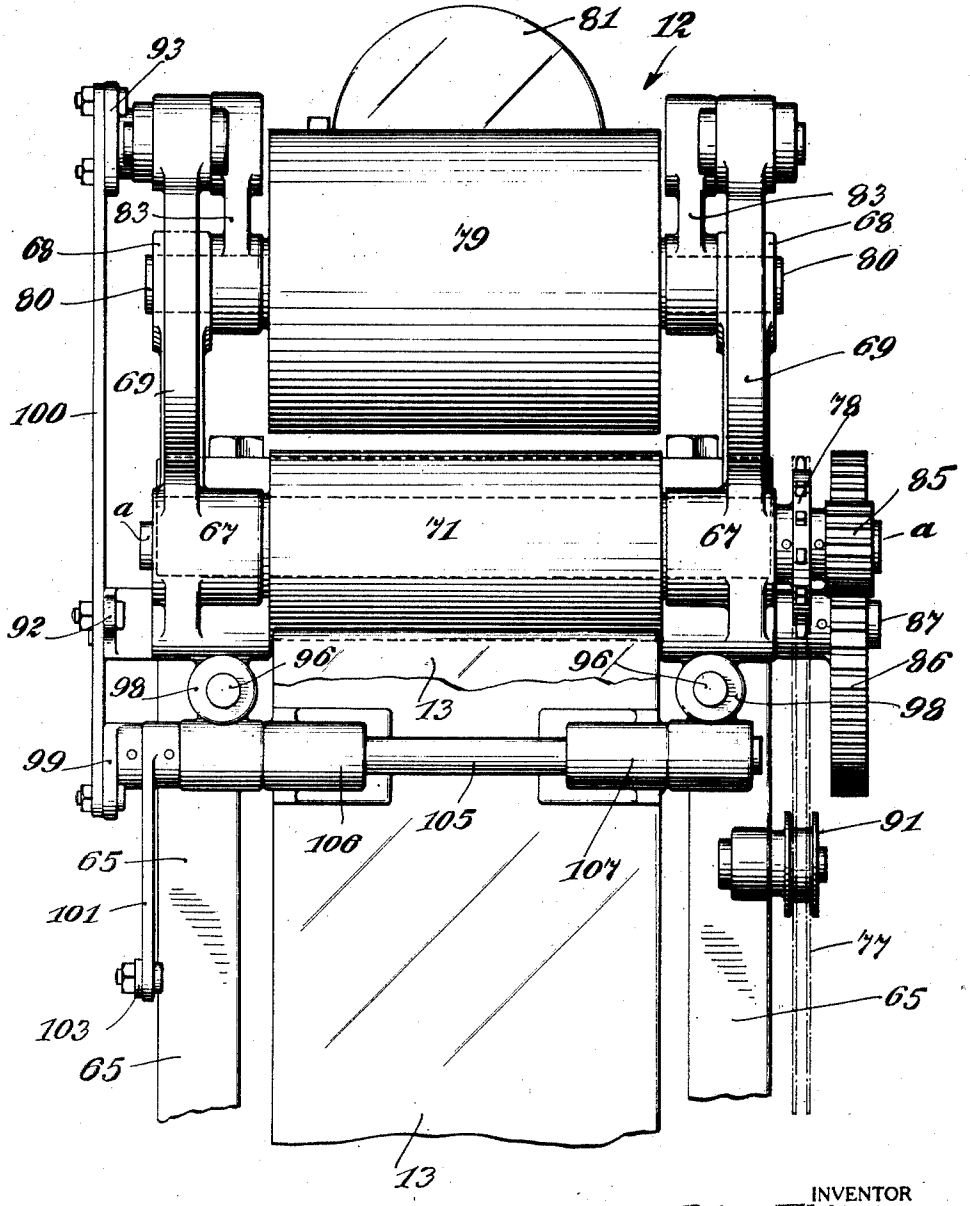

INVENTOR
John Fliedner
BY
Macdonald & Macdonald,
his ATTORNEYS

April 30, 1929. J. FLIEDNER 1,710,817

METHOD AND APPARATUS FOR PILING FIBROUS MATERIAL

Filed Jan. 2, 1926 8 Sheets-Sheet 5

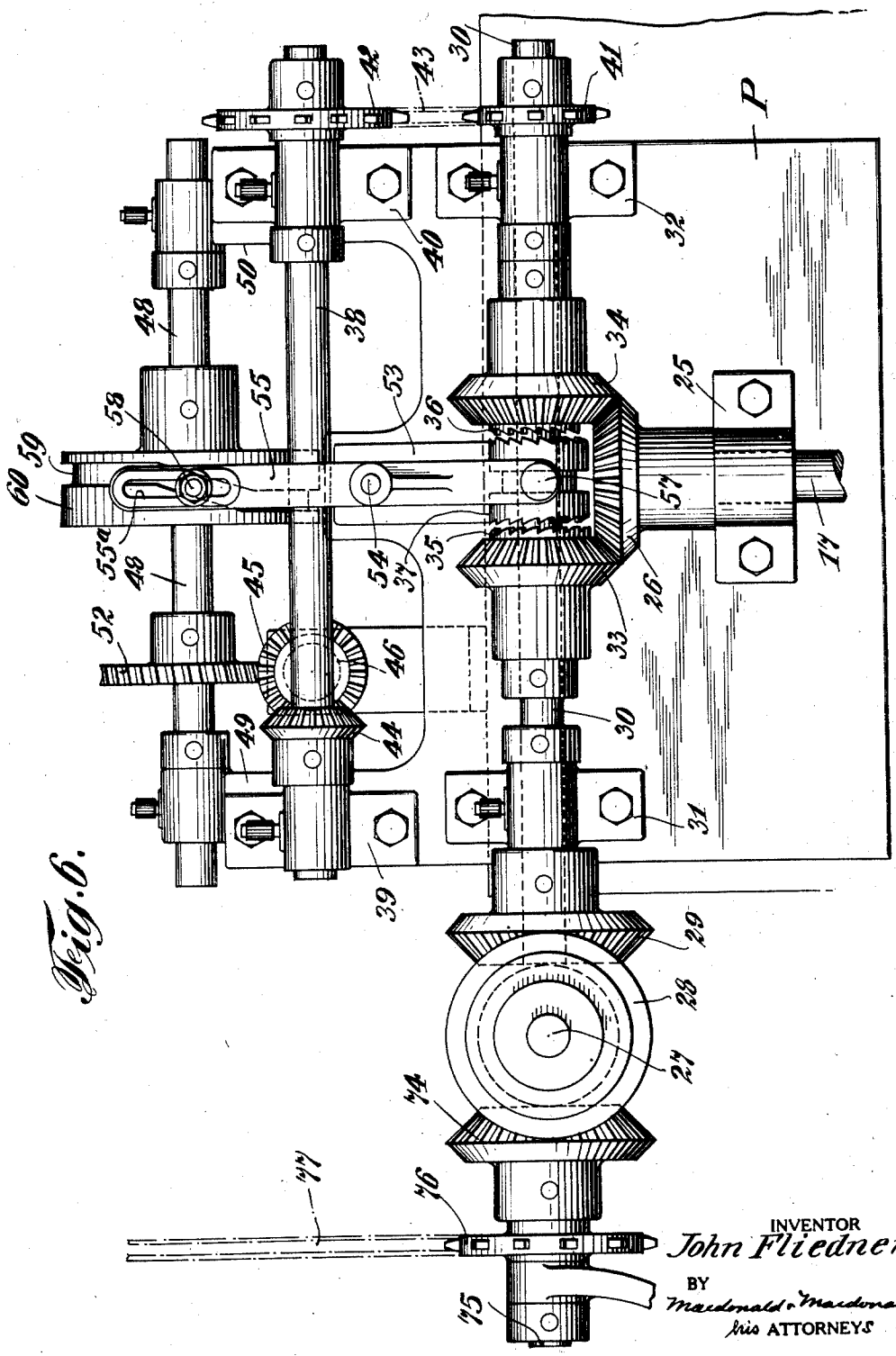

Fig. 6.

INVENTOR
John Fliedner
BY
Macdonald & Macdonald,
his ATTORNEYS

April 30, 1929. J. FLIEDNER 1,710,817

METHOD AND APPARATUS FOR PILING FIBROUS MATERIAL

Filed Jan. 2, 1926 8 Sheets-Sheet 6

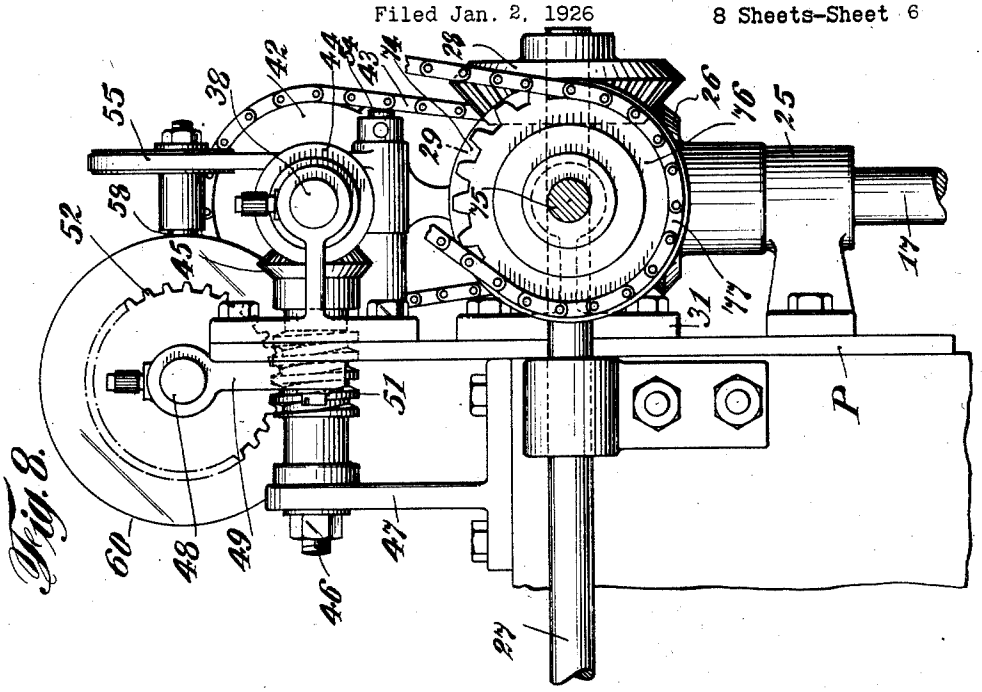

Fig. 8.

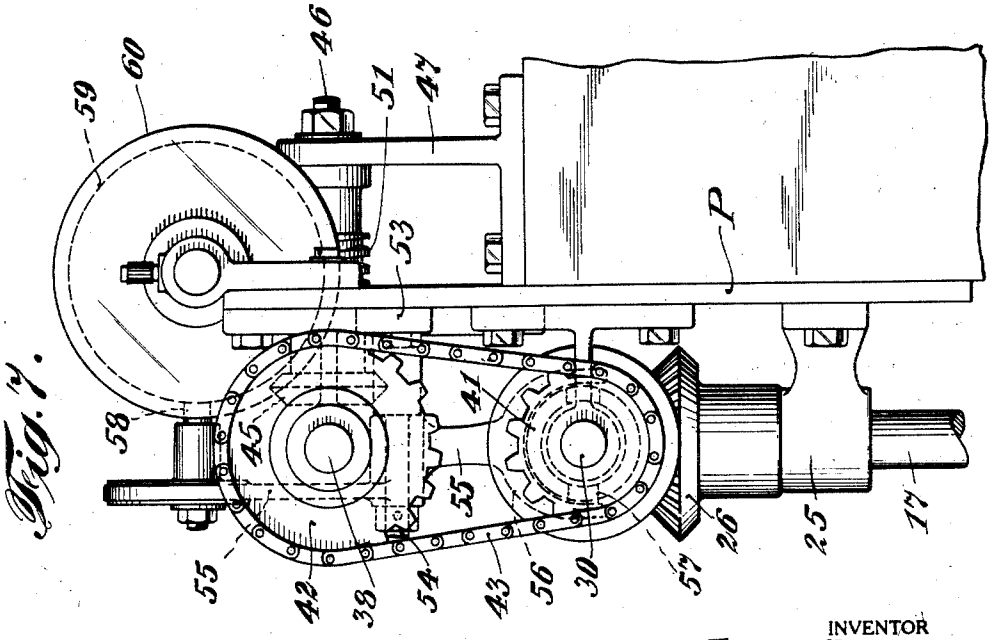

Fig. 9.

INVENTOR
John Fliedner
BY
Macdonald & Macdonald,
his ATTORNEYS

April 30, 1929. J. FLIEDNER 1,710,817

METHOD AND APPARATUS FOR PILING FIBROUS MATERIAL

Filed Jan. 2, 1926 8 Sheets-Sheet 7

Fig. 9.

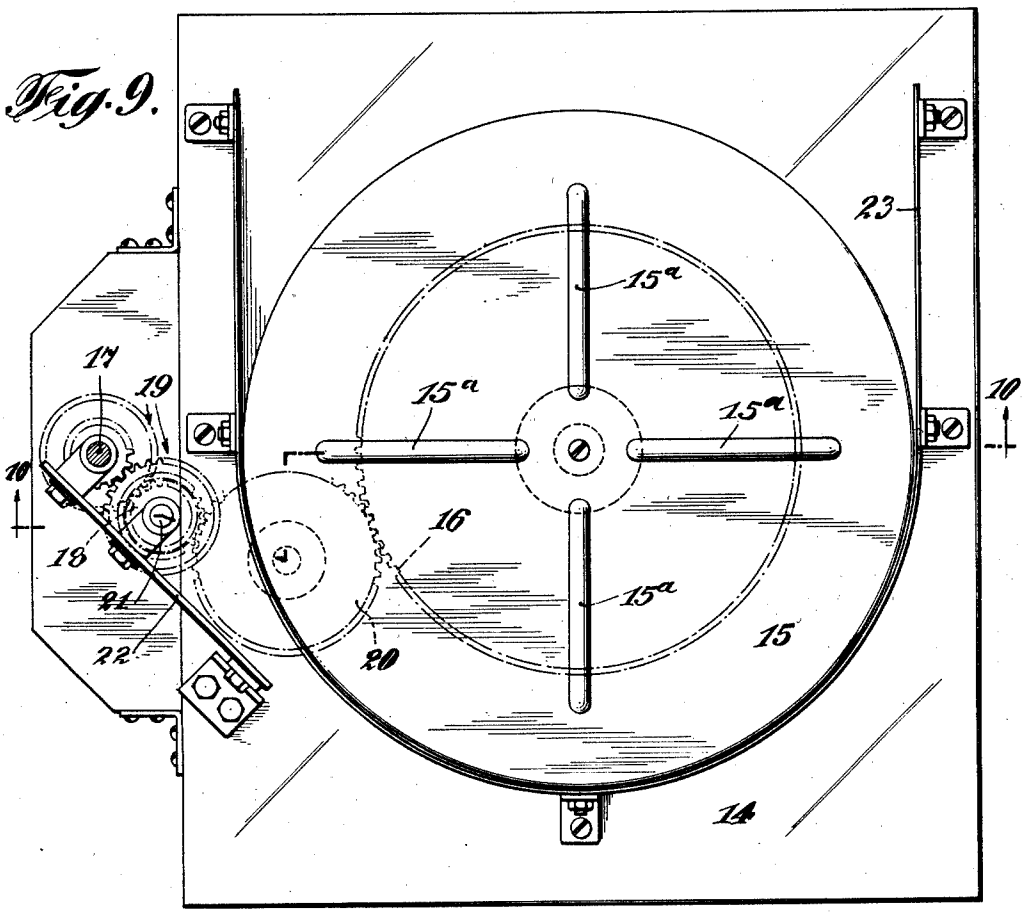

Fig. 10.

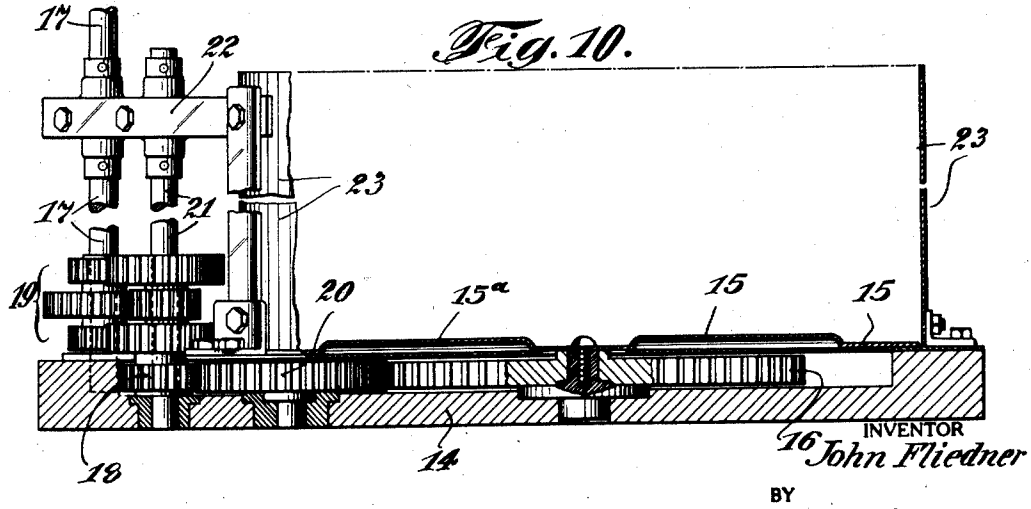

INVENTOR
John Fliedner

BY
Macdonald & Macdonald
his ATTORNEYS

April 30, 1929. J. FLIEDNER 1,710,817

METHOD AND APPARATUS FOR PILING FIBROUS MATERIAL

Filed Jan. 2, 1926 8 Sheets-Sheet 8

Fig. 11.

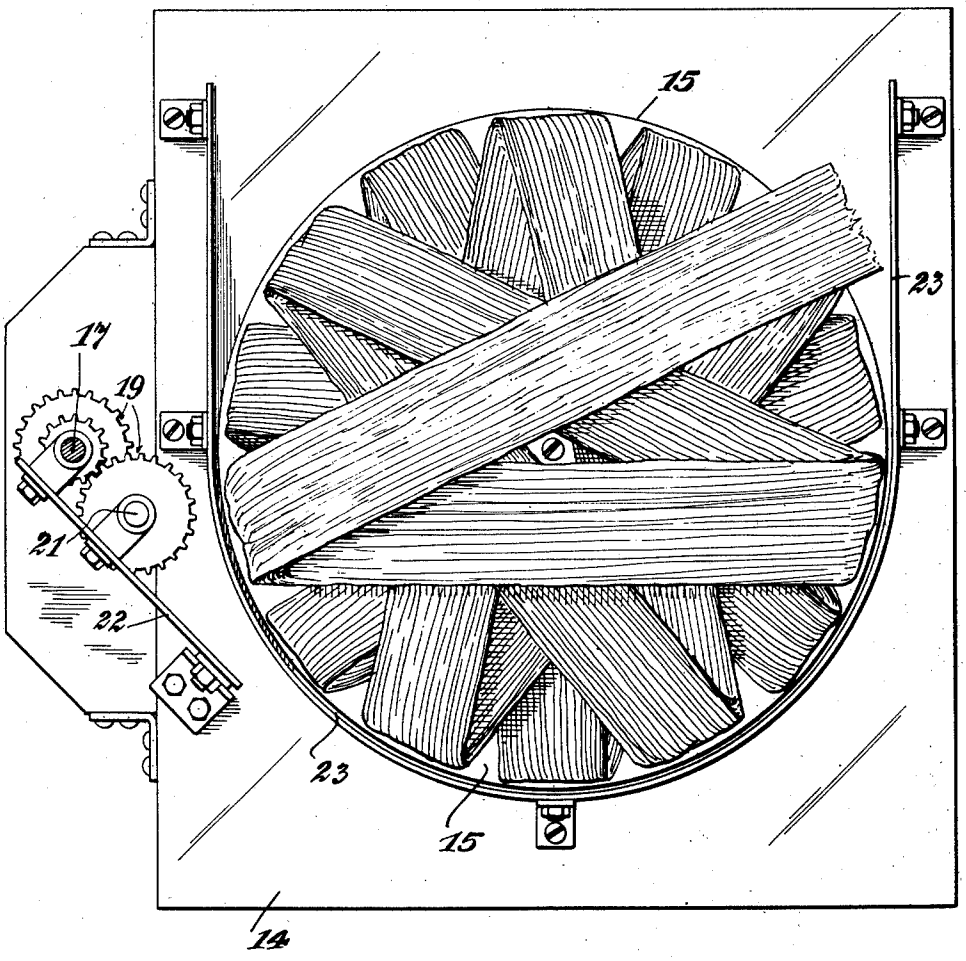

INVENTOR
John Fliedner
BY
Macdonald & Macdonald,
his ATTORNEYS

Patented Apr. 30, 1929. 1,710,817

UNITED STATES PATENT OFFICE.

JOHN FLIEDNER, OF FLUSHING, NEW YORK, ASSIGNOR TO AMERICAN MANUFACTURING COMPANY, OF NEW YORK, N. Y., A CORPORATION OF MASSACHUSETTS.

METHOD AND APPARATUS FOR PILING FIBROUS MATERIAL.

Application filed January 2, 1926. Serial No. 78,751.

My invention has a special adaptation to the manufacture of rope, wherein the hemp is first subjected to the action of a carding wheel, or a plurality thereof, from which it is doffed and gathered and finally transported to certain piling mechanism.

My present invention is directed to an improved piling mechanism for the orderly deposition of strips of carded fibre on a receptacle especially adapted for use in connection with a two-unit synchronized apparatus, but it is to be understood that it may be connected with a single carding machine, or to other types of machines.

The object of my invention is to provide means that will reduce the number of attendants at each machine and to increase materially the quantity of line in each part, so that splicing will not occur so frequently and a better quality of rope will be produced.

A further object of the invention resides in the provision of means for eliminating the twist usually found in a line of sliver and delivering sliver to a receiver in a formation that will obviate entanglement and to increase the capacity of the receiver.

A still further object is to provide means for maintaining a co-operation between the discharging and receiving portions of a piling mechanism.

My invention is shown embodied in a distributing and piling mechanism suitable for employment in connection with carding machines and analogous apparatus for piling the sliver in the course of rope manufacture, and said invention comprises essentially means for imparting a wavy or zig-zag fall to said fibre through the medium of swinging plates and depositing same on an oscillating platform carrying a substantially U-shaped guard-sheet, this platform being given a rotary oscillatory motion by this mechanism and at a speed having a definite ratio to the rate at which the sliver is delivered to it.

The foregoing objects and others that will appear as the nature of the invention is better understood may be accomplished by a construction, combination, and operative arrangement of parts such as is disclosed by the drawings. The nature of the invention is such as to necessarily render the same susceptible of various modifications, so that the showing of the drawings is to be considered merely illustrative, and I am entitled to make all such changes therefrom as fall within the scope of the claims.

In the drawings:

Figure 1 is a side elevation of a portion of a carding machine embodying my invention.

Fig. 2 is a vertical transverse sectional view taken substantially on the line 2—2 of Fig. 1, illustrating the turning or drawing off means and runway upon which the sliver travels to the piling mechanism.

Fig. 3 is an enlarged elevation of the discharging or distributing portion of the piling mechanism.

Fig. 4 is a similar view of the above mechanism as observed from the side opposite to that shown in Fig. 3.

Fig. 5 is a side elevation of the same as it appears in Fig. 1.

Fig. 6 is a front elevation showing the mechanism for imparting rotary oscillatory motion to a rotary table or receiver.

Fig. 7 is a side elevation of the mechanism as viewed from the right of Fig. 6.

Fig. 8 is a similar elevation, but viewed from the left of Fig. 6.

Fig. 9 is a plan view of the receiver.

Fig. 10 is a central longitudinal vertical section taken substantially on the line 10—10 of Fig. 9.

Fig. 11 is a diagrammatic plan view of the receiver and illustrates the formation of the sliver deposited in the same.

Referring now to the drawing, A denotes the frame of the carding machines B, which is provided with the usual carding wheel C, from which latter the fibrous material is doffed, turned, and drawn for final deposition onto a receiver, as described hereafter.

Referring now to Fig. 2 of the drawings, the numeral 7 denotes the doffing means wherein the curvature of the inclined sides 8 causes the material to gather centrally thereof. After passing under roll 9, it is turned on the pin 10 and conveyed to the discharging portion 12 by means of the runway 11. The material is now in the form of a sliver and ready for deposition onto the receiver.

For a clear understanding of the invention it may be said that the term "piling mechanism" is used to include a device commonly called a distributor and a receiver, upon which latter the fibrous material in sliver form is deposited. The description about to

follow will first embrace the receiver and its component parts.

Referring to Figures 9 to 11 of the drawings, a stationary base 14 on the floor level carries on its upper surface a rotatable plate or table 15. Said base 14 is provided with a gear 16 operating within a recess in said platform and adapted to be rotated from the vertical shaft 17 which imparts motion to a gear 18, through a set of reduction gears 19, and the idler gear 20. Said gear 18 is connected to a counter shaft 21, which latter, together with said shaft 17, is suitably supported by the bracket arrangement 22. The base 14 is provided with a stationary U-shaped guard 23, which embraces said circular plate 15 on three sides. The upper face of said plate 15 is provided with radial cleats 15ª which tend to carry the hemp coils or layers when they are laid on the said plate without slippage.

As previously pointed out, I provide mechanism for imparting a rotary oscillatory motion to said plate 15 as experience has proven that this motion co-operates with the action of certain swinging plates 13 of the discharging portion 12, for the purpose of gathering the line of material and depositing it on the rotatable table 15 in a formation not only best calculated for keeping it out of entanglement, but for securing a maximum load of fibre.

The mechanism for oscillating shaft 17 is clearly shown in Figures 7 and 8 of the drawings, being carried by the frame of the associated carding machine in close proximity to the second carding wheel, and is directly supported by a plate P, carrying bracket 25 having suitably journalled therein the upper end of said shaft 17 extending from the stationary base 14, as previously mentioned.

The upper end of said shaft 17 is provided with a bevelled gear 26. Main drive shaft 27 carries a bevelled gear 28, meshing with a similar gear 29 and thus transmits motion to the horizontal shaft 30, supported on said plate P by means of bearings 31 and 32, which motion is communicated to the rotatable plate 15 by means of the bevelled gears 33 and 34 loosely mounted on said shaft 30.

Each of said gears 33 and 34 are provided at their inner faces with clutch members 35 and 36 which co-act with a complementary double clutch 37, splined on shaft 30 and adapted to slidably engage said clutch members 35 and 36 at periodic intervals.

From the foregoing it is apparent that the automatic engagement and disengagement of the clutch 37 with the clutch members 35 and 36 alternately connect shaft 30 to the bevelled gears 33 or 34, and the bevelled gear 26, and thus communicate a rotary oscillatory movement to said table 15 by means of shaft 17.

The remaining elements of the mechanism are designed to effect the periodic operation of said double clutch 37, and to this end there is a horizontal shaft 38, supported in bearings 39 and 40, fixed to said plate P. The outer end of said shaft 30 carries a sprocket wheel 41 operatively connected to said shaft 38 by means of a sprocket wheel 42 and chain 43. Said shaft 38 is also provided with a bevelled gear 44, meshing with a similar gear 45 mounted on stub shaft 46, suitably supported by means of a bracket 47 secured to the frame of the carding machine.

I further provide another horizontal shaft 48, extending slightly above said plate P and supported thereby by means of bearing brackets 49 and 50 secured to said plate P, and mount on said shaft a worm-wheel 51, which latter is adapted to mesh with a worm-gear 52 for the purpose of transmitting rotative motion to said shaft 48.

Pivotally supported from the plate P, by means of bracket 53, as at 54, is an oscillatory lever 55, having its lower end forked, as denoted at 56, and adapted to embrace said double clutch 37, and having inwardly directed pins 57 slidably engaging the annular groove in said clutch. The upper end of said lever 55 is provided with a follower 58, adjustably mounted in the elongated slot 55ª, and adapted to engage the cam groove 59 in the wheel 60, fixed to said shaft 48.

It is manifest that the motion transmitted to shaft 30 from the main drive shaft 27 is conveyed to the other two shafts 38 and 48 respectively by means of the sprocket and chain arrangement and the co-action of worm-wheel 52 and worm-gear 51. The bevelled gears 33 and 34 being loosely mounted on said shaft 30, await the oscillatory swing of said lever 55, which effects the union of said shaft and the selected bevelled gear according to the registration of the double clutch 37 with the respective clutch members 35 and 36.

As previously pointed out, the discharging portion of my device is adapted to convey the sliver, advancing along the runway 11, to the table 15. This device (discharging portion) is further designed to impart to said sliver, as it reaches said table, a wavy or oscillatory form of delivery through the medium of plates mounted to swing to and fro somewhat in the nature of a pendulum.

To this end said discharging device, generally denoted by the numeral 12, is positioned adjacent to the carding machine and supported by means of the bracket 65 rising obliquely from the frame of said machine. Said bracket 65 comprises a base portion, secured to the frame, as noted above, and two relatively long spaced arms, thus positioning the discharging portion at a properly elevated position to one side of the machine.

The mechanism of said discharging device 12 is carried by a pair of brackets 66 suitably secured to the top portions of the arms of said bracket 65, each of said brackets 66 be-

ing provided with a bearing 67, a forked bearing 68 directly above and an upwardly extending lateral arm 69 having a bearing 70 at the top thereof. The upright parallelly disposed brackets 66 are connected by a shaft *a*, suitably journalled in bearings 67, which carries the discharge roller 71. It is this roller 71 that constantly exerts the necessary pull on the sliver advancing along the runway 11 and the rotation thereof is accurately timed with the carding machines, so that a smooth and constant cooperation is assured, as otherwise any uneven pull on the sliver tends to disrupt the parallel relation of the fibres, or what is more serious, the breaking of the sliver itself.

Said roller 71 is indirectly operated from the main drive shaft 27, which carries a bevelled gear 28 meshing with a similar gear 74 on stub shaft 75, the latter being provided with a sprocket wheel 76 at its end to which the sprocket chain 77 is connected. The latter leads to a small sprocket wheel 78 mounted on shaft *a* carrying the discharge roller 71.

Frictional contact of the sliver with said roller 71 is attained by means of a presser roll 79, which further performs the function of compactly pressing the fibres of the sliver together for obvious reasons. This roller 79 is provided with pintles 80 mounted in said bearings 68 and is held in contact with the sliver and the discharge roller 71 by means of a counterweight 81 carried by arm 82 pivotally mounted in bearings 70 of said arm 69. Links operatively connect the arm 82 to the roll 79 through the medium of pintles 80.

As stated hereinbefore, the other component parts of the distributing mechanism are designed to impart a wavy or zig-zag fall to said sliver through the medium of swinging plates 13, which will now be described in detail.

The outer end of said shaft *a* is provided with a gear 85, adjacent to said sprocket wheel 78, which meshes with a similar gear 86 carried by shaft 87, supported by brackets 88.

Said brackets 88 comprise a base plate 88ª, suitably bolted to the bracket 65, and forwardly directed bosses 89, supporting the horizontal rods 96. One of the brackets 88 is provided with an arm 90 carrying an idler 91 at its end for the purpose of leading chain 77 out of interference with shaft 87.

Shaft 87 carrying the gear 86 is provided at its opposite end with a crank 92, which is connected with a beam 93, pivotally connected to link 83, as at 94, by means of the elongated link 95.

On inspection of Figs. 3 and 4, it will be observed that each of said rods 96, extending from brackets 88, rigidly carries a pair of bearings 97 and 98, the former pivotally supporting a bell crank 99, having its upper arm connected to said beam 93 by means of link 100. The other arm of said bell crank 99 is operatively connected to crank 101 by means of a link 103. The said bearings 97 and 98 carry shafts 104 and 105 respectively, which lead to the companion bearings on the opposite side of the device, said shafts supporting brackets 106 and 107 carrying swinging plates 13. As observed in the drawings, these plates extend downwardly and terminate just short of the top of the receiving device, while their upper ends are bowed outwardly to present smooth running edges for the sliver.

The sliver leaving the discharging portion 12 falls by gravity, and under the influence of the swinging plates 13 is deposited on the table 15 in a reciprocatory fashion, and were the aforesaid circular plate 15 stationary, would pile thereon in a line corresponding to the diameter of said plate. However, by means of the mechanism just described, I also impart a rotary oscillatory movement to said circular plate 15, so that the piling of the sliver is arranged in eccentric chords on said plate 15, as shown in Figure 11, and continued until the space within the guard sheet 23 is fully utilized if piled in eccentric chordal lines—that is, off center—the sliver will naturally pile with an open center. This is important to observe, because otherwise, the sliver will hump in the center and will tend to overturn the pile, thereby decreasing the capacity of the load and causing entanglement.

Obviously under such conditions I am enabled to take off a sliver of great length within the receiving capacity of a moderately-sized receiver. It also serves to preserve the parallel relation of the fibres, thereby producing a better sliver, while it eliminates the cost of an attendant to watch the delivery of the sliver onto the receiver. Moreover, my oscillating method of piling avoids the twist in the sliver that may be produced in other methods, such, for instance, as those in which the receiver is completely rotated instead of oscillated. This is due not only to the to-and-fro delivery of the sliver on the table in what is referred to in the claims as "oppositely directed lengths", but also to the fact that whatever twist occurs as the sliver is laid during the time the table is rotating in one direction is off-set or neutralized by the twist occurring as the table is rotating in the opposite direction. Therefore, in drawing the sliver from the pile, the two opposite twists, which are put in the sliver during the oscillations of the table neutralize each other, and the sliver draws from the pile in its original condition. The sliver in my method is deposited by the to-and-fro movement of the aforesaid swinging plates in co-operation with the to-and-fro movement of the receiver, in a series of straight-line folds or plies piled on top of one another. If the receiver were held stationary, these folds would all be diametrically across the receiver. But since the receiver

is oscillated simultaneously the folds fall in a series of chordal lines, as is clearly shown in Figure 11.

The term "substantially straight line formation" as used in the claims is intended to distinguish from ring or loop formation, and to cover any laying of sliver in reciprocatory fashion.

Several factors contribute to the formation of the sliver as it is so piled. If the table is so placed relatively to the discharge that the sliver drops near the center, it will fall more nearly in straight line formation and nearer the diameter of the table than it will if dropped near the periphery. The greater the speed of the table, the greater will be the curve in the placement of the sliver; and inasmuch as the speed of the table is greater on the periphery than at the center, if the table is adjusted relatively to the delivery so that the sliver is deposited near the periphery, the curve will be greater than if deposited near the center. The character of the sliver itself is also a factor contributing to the formation of the sliver, and different machines operate with different speeds on fibers of different character, as will be well understood by those versed in the art.

I claim:

1. In a piling mechanism, in combination, an element adapted to draw a sliver thereover, a rotatable element positioned below the first named element, means for imparting rotary oscillatory motion to said rotatable element, and means comprising spaced oscillating plates for depositing said sliver on said rotatable element.

2. In a piling mechanism, in combination, a rotatable element adapted to draw a sliver thereover, a rotatable element positioned below the first named element, means for imparting rotary oscillatory motion to said rotatable element, and means comprising vertically spaced oscillating plates for depositing said sliver on said rotatable element.

3. In a piling mechanism, in combination, drawing means adapted to receive a sliver, oscillating means having active elements located below said drawing means, a rotatable element adapted to receive a sliver thereon and a series of rotative elements adapted to co-operate through the medium of an oscillatory lever to impart rotary oscillatory movement to said element.

4. In a piling mechanism, in combination, drawing means adapted to receive a sliver, oscillating means having active elements located below said drawing means, a rotatable element adapted to receive a sliver, a shaft and means for converting the rotary movement of said shaft into a rotary oscillatory movement of said rotary element.

5. In a piling mechanism, in combination, drawing means adapted to receive a sliver, oscillating means having active elements located below said drawing means, a rotary receiving plate, a driving shaft, an automatic reversing mechanism for periodically reversing the gearing between said driving shaft and the receiving plate.

6. In a piling mechanism, in combination, drawing means adapted to receive a sliver, oscillating means having active elements located below said drawing means, a rotary sliver-receiving element, a platform carrying said element, driving gear for said element, a shaft operatively connected to said gearing, a main shaft, gearing connecting said main shaft with the first main shaft, and means operative by said main shaft for communicating rotary oscillatory movement to said rotary element.

7. In a piling mechanism, in combination, drawing means adapted to receive a sliver, oscillating means having active element located below said drawing means, a horizontal platform, a rotary plate pivotally carried by said platform, means for imparting rotary oscillatory movement to said plate and a stationary guard embracing said platform on three sides but open on the fourth side.

8. In a piling mechanism, in combination, drawing rolls adapted to receive a sliver between them, spaced plates located below said rolls and adapted to receive the sliver between them and oscillate transversely of said rolls, a rotary plate mounted below the first named plates, gearing connected to said rotary plate, mechanism embodying a main shaft, a shaft operatively connected to the first named shaft, and means operatively connected therewith for imparting rotary oscillatory movement to said plate and causing it to receive the sliver thereon in eccentric chordal lines.

9. In a piling mechanism, in combination, a delivery roll, spaced rods located below said roll, vertically spaced plates positioned below said roll, spaced means for pivotally supporting said plate for oscillatory movement upon said rods, links connecting said spaced means together, means for oscillating the plate-supporting means, a rotary receiving plate, a driving shaft, and automatic reversing mechanism for periodically reversing the gearing between said driving shaft and the receiving plate.

10. In a piling mechanism, in combination, a delivery roll, spaced rods located below said roll, vertically spaced plates positioned below said roll, spaced means for pivotally supporting said plate for oscillatory movement upon said rods, links connecting said space means together, means for oscillating the plate supporting means, a platform, a rotary plate mounted on said platform, gearing connected to said plate, mechanism embodying a main shaft, a shaft operatively connected therewith for imparting rotary oscil-

latory movement to said plate and causing it to receive the sliver thereon in eccentric chordal lines.

11. In a piling mechanism, the combination with a rotary sliver receiving element and means for imparting rotary oscillatory movement thereto, of spaced brackets, drawing rollers located between said brackets and disposed one above the other, the upper roll being vertically movable in the brackets, a lever pivotally connected with the brackets and carrying a weight and connected at a point between its end with the pintles of the upper roller, a beam pivotally connected to said lever, means operatively connecting one end of said beam with the lower roller, plates mounted for oscillatory movement below the lower roller and means operatively connecting the other end of said beam with said plates.

12. In a piling mechanism, the combination with swinging plates and means for imparting oscillatory movement thereto, of a platform, a rotary plate mounted on said platform, a gearing connected to said plate, a vertical shaft rising from said platform and operatively connected to said plate, a bevelled gear fixed to the upper end of said shaft, a rotatable shaft positioned above said platform, oppositely directed and loosely mounted bevelled gearing on said rotatable shaft, a second shaft operatively connected to said rotatable shaft, a third shaft operatively connected to said second shaft, a pulley mounted on said third shaft and having a cam groove arranged on its periphery, a pivotally supported link having a follower at one end adapted to engage said cam groove and a clutch member operatively connected to the other end of said link and adapted to slidably engage a selected member of said bevelled gearing on said rotatable shaft at periodic intervals for the purpose of imparting rotary oscillatory movement to said plate.

13. In a piling mechanism, in combination, an element adapted to draw a sliver thereover, a rotatable element for receiving said sliver, means for imparting rotary oscillatory motion to said rotatable element and means for depositing said sliver upon said rotatable element in a reciprocatory fashion.

14. In a piling mechanism, in combination, an element adapted to draw a sliver thereover, a rotatable element for receiving said sliver, means for imparting rotary oscillatory motion to said rotatable element and oscillatory means for depositing said sliver on said rotatable element.

15. In a piling mechanism, in combination, an element adapted to draw a sliver thereover, a rotatable element for receiving said sliver, means for imparting rotary oscillatory motion to said rotatable element and oscillatory means for depositing said sliver upon said rotatable element, both of said means being operable at a speed having a definite ratio to the rate at which the sliver is delivered.

16. The method of piling sliver as it emerges from the machine which consists in laying it by gravity in substantially straight line formation from side to side across a horizontal rotary table, each line of said sliver being spaced partly from its preceding line.

17. The method of piling sliver as it emerges from the machine which consists in laying it by gravity in substantially straight line formation from side to side across a horizontal rotary oscillatory table, each line of said sliver being angularly spaced away from its preceding line.

18. The method of piling sliver as it emerges from the machine which consists in laying it by gravity in substantially straight line formation from side to side across a horizontal rotary table, each line of said sliver being spaced partly away from its preceding line, said formation being effected by manipulation of the depending line of sliver.

19. The method of piling sliver as it emerges from the machine which consists in laying it by gravity in substantially straight line formation from side to side across a horizontal rotary table, each line approximating the periphery thereof, and lying in eccentric cords relative to the circumference relative to the periphery of said table.

20. The method of piling sliver as it emerges from the machine which consists in laying it by gravity in series of regular substantially straight line formation from side to side across a horizontal rotary table, each line of said sliver being spaced partly away from its preceding line, said formation being effected by oscillation of the depending line of sliver in conjunction with the oscillation of the rotary table.

21. The method of piling sliver as it emerges from the machine which consists in laying it by gravity in series of regular substantially straight line formation from side to side across a horizontal rotary table, each line of said sliver being spaced partly away from its preceding line, said formation being effected by oscillation of the depending line of sliver in conjunction with the oscillation of the rotary table and the elastic quality of the sliver.

22. The method of piling sliver as it merges from the machine which consists in laying it by gravity in series of regular substantially straight line formation from side to side across a horizontal rotary table, each line of said sliver being spaced partly away from its preceding line, said formation being effected by oscillation of the depending line of sliver in conjunction with the oscilla-

tion of the rotary table, the speed of the table having a definite rotation to the rate at which the sliver is delivered to it.

23. The method of piling sliver as it emerges from the machine, which consists in laying it by gravity on a rotating table in a series of folded and oppositely directed lengths by manipulation of the depending sliver while said table is rotating in one direction, and then laying it in another and similar series while said table is rotated in the opposite direction.

24. The method of piling sliver as it emerges from the machine which consists in laying it by gravity on a rotating table in a reciprocatory fashion so as to make a series of folded and oppositely directed lengths, the same being effected by manipulation of the falling sliver.

25. The method of piling sliver as it emerges from the machine which consists in laying it by gravity on a rotating table in reciprocatory fashion so as to make a series of folded and oppositely directed lengths, the same being effected by transverse movement of the falling sliver in conjunction with the rotary motion of the table.

26. The method of piling sliver as it emerges from the machine which consists in laying it by gravity on a rotating table in reciprocatory fashion so as to make a series of folded and oppositely directed lengths, the same being effected by transverse movement of the lower end of the falling sliver in conjunction with the centrifugal force of the rotating table.

27. The method of piling sliver as it emerges from the machine which consists in laying it by gravity on a rotating table in reciprocatory fashion so as to make a series of folded and oppositely directed lengths, the same being effected by transverse movement of the falling sliver in conjunction with the oscillation of the rotary table.

28. In a piling mechanism, in combination, an element adapted to draw a sliver thereover, a rotatable element positioned below the first named element, means for placing a series of folded and oppositely directed lengths of sliver on said table while the same is rotating in one direction, and means for placing another series of folded and oppositely directed lengths of sliver on said table while the same is rotating in the opposite direction.

29. A receiver for fibrous material comprising a horizontal rotary platform, means for delivering a series of folded and oppositely directed lengths of sliver to said platform, while the same is rotating in one direction, and for placing another series of folded and oppositely directed lengths of sliver on said platform while the same is rotating in the opposite direction.

30. A receiver for fibrous material comprising a horizontal rotary platform, means for delivering a series of folded and oppositely directed lengths of sliver to said platform, while the same is rotating in one direction, and for placing another series of folded and oppositely directed lengths of sliver on said platform while the same is rotating in the opposite direction, and stationary means for holding the sliver in position.

JOHN FLIEDNER.