(12) STANDARD PATENT (11) Application No. **AU 2007247769 B2**
(19) AUSTRALIAN PATENT OFFICE

(54) Title
Modular catheter assembly

(51) International Patent Classification(s)
A61M 25/01 (2006.01) ***A61M 25/10*** (2006.01)
A61M 25/02 (2006.01)

(21) Application No: **2007247769** (22) Date of Filing: **2007.05.04**

(87) WIPO No: **WO07/128065**

(30) Priority Data

(31) Number	(32) Date	(33) Country
60/835,501	**2006.08.04**	**US**
60/798,254	**2006.05.05**	**US**

(43) Publication Date: **2007.11.15**
(44) Accepted Journal Date: **2011.08.11**

(71) Applicant(s)
CathRx Ltd

(72) Inventor(s)
Milijasevic, Zoran;Wooloston, Jesse

(74) Agent / Attorney
Shelston IP, Level 21 60 Margaret Street, Sydney, NSW, 2000

(56) Related Art
WO 2006/135988 (Cathrx Ltd)
WO 2005/051216 (Cathrx Pty Ltd)
WO 2006/092016 (Cathrx Ltd)

(12) INTERNATIONAL APPLICATION PUBLISHED UNDER THE PATENT COOPERATION TREATY (PCT)

(19) World Intellectual Property Organization
International Bureau

(43) International Publication Date
15 November 2007 (15.11.2007)

PCT

(10) International Publication Number
WO 2007/128065 A1

(51) International Patent Classification:
A61M 25/01 (2006.01) *A61M 25/10* (2006.01)
A61M 25/02 (2006.01)

(21) International Application Number:
PCT/AU2007/000601

(22) International Filing Date: 4 May 2007 (04.05.2007)

(25) Filing Language: English

(26) Publication Language: English

(30) Priority Data:
60/798,254 5 May 2006 (05.05.2006) US
60/835,501 4 August 2006 (04.08.2006) US

(71) Applicant *(for all designated States except US)*: **CATHRX LTD** [AU/AU]; ACN 089 310 421, Suite G16, National Innovation Centre, Australian Technology Park, Eveleigh, NSW 1430 (AU).

(72) Inventors; and
(75) Inventors/Applicants *(for US only)*: **MILIJASEVIC, Zoran** [AU/AU]; 5 Jacquelene Close, Bayview, NSW 2104 (AU). **WOOLOSTON, Jesse** [AU/AU]; 50 Grasmere Lane, Cremorne, NSW 2090 (AU).

(74) Agent: **F B RICE & CO**; Level 23, 44 Market Street, Sydney, NSW 2000 (AU).

(81) Designated States *(unless otherwise indicated, for every kind of national protection available)*: AE, AG, AL, AM, AT, AU, AZ, BA, BB, BG, BH, BR, BW, BY, BZ, CA, CH, CN, CO, CR, CU, CZ, DE, DK, DM, DZ, EC, EE, EG, ES, FI, GB, GD, GE, GH, GM, GT, HN, HR, HU, ID, IL, IN, IS, JP, KE, KG, KM, KN, KP, KR, KZ, LA, LC, LK, LR, LS, LT, LU, LY, MA, MD, MG, MK, MN, MW, MX, MY, MZ, NA, NG, NI, NO, NZ, OM, PG, PH, PL, PT, RO, RS, RU, SC, SD, SE, SG, SK, SL, SM, SV, SY, TJ, TM, TN, TR, TT, TZ, UA, UG, US, UZ, VC, VN, ZA, ZM, ZW.

(84) Designated States *(unless otherwise indicated, for every kind of regional protection available)*: ARIPO (BW, GH, GM, KE, LS, MW, MZ, NA, SD, SL, SZ, TZ, UG, ZM, ZW), Eurasian (AM, AZ, BY, KG, KZ, MD, RU, TJ, TM), European (AT, BE, BG, CH, CY, CZ, DE, DK, EE, ES, FI, FR, GB, GR, HU, IE, IS, IT, LT, LU, LV, MC, MT, NL, PL, PT, RO, SE, SI, SK, TR), OAPI (BF, BJ, CF, CG, CI, CM, GA, GN, GQ, GW, ML, MR, NE, SN, TD, TG).

Published:
— *with international search report*

For two-letter codes and other abbreviations, refer to the "Guidance Notes on Codes and Abbreviations" appearing at the beginning of each regular issue of the PCT Gazette.

(54) Title: MODULAR CATHETER ASSEMBLY

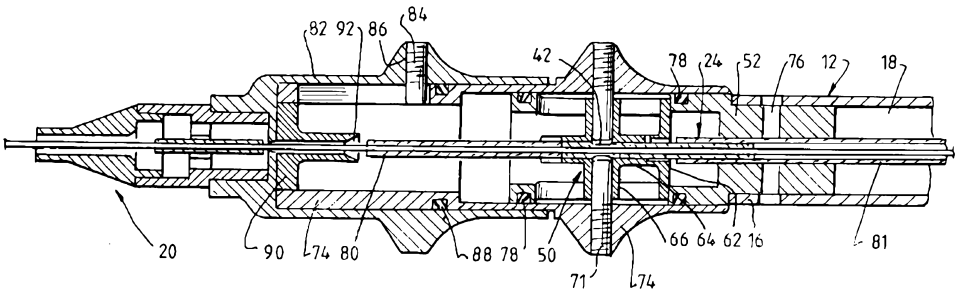

(57) Abstract: A modular catheter assembly (10) includes a holder (12) having a proximal end (14) and a distal end (16). An electrode sheath carrier (20) is mounted on the distal end (16) of the holder (12). A shape imparting element carrier is removably mountable to an end of the holder (12) and is accessible externally of the holder (12) with at least the shape imparting element carrier being replaceably mounted to the holder (12).

WO 2007/128065 A1

2007247769 29 Jun 2011

"Modular catheter assembly"

Related Applications

The contents of both United States of America Provisional Patent Application No 60/798254 filed on 5 May 2006 and US Provisional Patent Application No. 60/835501 filed on 4 August 2006 are incorporated herein by reference.

Field

This invention relates, generally, to catheters and, more particularly, to a modular catheter assembly and to components for a modular catheter assembly.

Background

Any discussion of the prior art throughout the specification should in no way be considered as an admission that such prior art is widely known or forms part of common general knowledge in the field.

Catheters, such as those used in cardiovascular applications, are comprised of an elongate electrode carrying element mounted on a distal end of a handle. The handle has at least one connector so that a patient cable can be connected to a proximal end of the handle to feed signals through the handle to the electrodes. Often, these catheters include steering mechanisms or stylets arranged within the electrode carrying element to effect steering and/or deflection of a distal end of the electrode carrying element.

Such an arrangement results in an expensive piece of equipment particularly the handle which has the at least one connector and cabling. Also, because of voids in the electrode carrying element and in the interior of the handle, it is not possible, generally, to effect sufficient sterilisation of such catheters enabling them to be reused. Thus, in most cases, the catheters are used once only and are then disposed of.

Not only does this create a substantial expense but there is the environmental problem of disposal of potentially hazardous items.

Summary

It is an object of the present invention to overcome or ameliorate at least one of the disadvantages of the prior art, or to provide a useful alternative.

According to a first aspect of the invention, there is provided a modular catheter assembly which includes:

2007247769 29 Jun 2011

a holder having a proximal end and a distal end;

an electrode sheath carrier mounted on the distal end of the holder, the electrode sheath carrier being configured for attachment to an electrode sheath that is, when in use, inserted into a patient; and

a shape imparting element carrier removably mountable to an end of the holder and being accessible externally of the holder, such that, when in use, at least the shape imparting element carrier is removable from the holder while the electrode sheath remains in the patient.

According to another aspect of the invention, there is provided a modular catheter assembly which includes

a holder having a proximal end and a distal end;

an electrode sheath carrier mounted on the distal end of the holder; and

a shape imparting element carrier removably mountable to an end of the holder and being accessible externally of the holder with at least the shape imparting element carrier being replaceably mounted to the holder.

In this specification, the term "shape imparting element" is to be understood in a broad sense to include any device which imparts a shape to the electrode sheath of the catheter whether adjustably, such as a steering shaft (with or without a fixed curve portion), or non-adjustably, such as a fixed curve stylet.

The shape imparting element carrier may be replaceable to be sterilised and reused and/or to be replaced by a different shape imparting element carrier carrying a different shape imparting element.

The holder may comprise an elongate element defining an axially extending bore.

The shape imparting element carrier may comprise a boss having a proximal end and a distal end. The assembly may include a shape imparting element carried on the shape imparting element carrier, the shape imparting element comprising an elongate tubular member with an actuator received in the elongate tubular member, at least one of the actuator and the tubular member being mounted to the distal end of the boss.

The boss may be received within the bore of the holder. The shape imparting element carrier may comprise a connector arranged distally of the boss and connected to the boss, one of the tubular member and the actuator of the shape imparting element

2007247769 29 Jun 2011

being fast with the connector and the other of the tubular member and the actuator being fast with the boss.

In one embodiment, the bore of the holder may be an open passageway extending from the proximal end of the holder to the distal end of the holder, the holder defining receiving formations and the boss and the connector comprising corresponding engaging formations which engage their associated receiving formations in the bore of the holder for retaining the shape imparting element in position relative to the holder.

A first receiving formation may be arranged at the proximal end of the holder and a second receiving formation may be arranged distally of the first receiving formation, the second receiving formation being displaceably arranged within the bore of the holder. The second receiving formation may be fast with a control mechanism, the control mechanism being axially displaceably arranged on the holder and being accessible externally of the holder.

The electrode sheath carrier may be mounted on a displacement mechanism, the displacement mechanism being arranged on the distal end of the holder. The displacement mechanism may be displaceably arranged relative to the control mechanism on the holder.

Both the first receiving formation and the second receiving formation may be shaped to permit the passage of at least electrical conductors past the first receiving formation and the second receiving formation. The catheter may be an irrigation catheter and the receiving formations may also be shaped to allow an irrigation conduit received in the bore of the housing to pass the receiving formations.

In another embodiment, the bore of the holder may be a blind bore defined at the distal end of holder. Once again, in this embodiment, the assembly may include a shape imparting element carried on the shape imparting element carrier, the shape imparting element comprising an elongate tubular member with an actuator received in the elongate tubular member. The shape imparting element carrier may be removably received within the blind bore, one of the tubular member and the actuator of the shape imparting element being fast with the shape imparting element carrier and the other of the tubular member and the shape imparting element being fast with the holder.

The shape imparting element carrier may function as a control mechanism for controlling the shape of the shape imparting element carried on the shape imparting element carrier, the control mechanism being axially displaceable relative to the holder.

2007247769 29 Jun 2011

The electrode sheath carrier may be arranged distally of the shape imparting element carrier, the electrode sheath carrier having a proximally extending mount received in a distal part of the holder.

The electrode sheath carrier may include a displacement mechanism displaceably arranged, axially, on the mount for effecting axial displacement of the electrode sheath relative to the shape imparting element, in use.

In this embodiment, the assembly may include a first sealing element interposed between the shape imparting element carrier and the distal end of the holder for inhibiting the ingress of material into the bore of the holder. The first sealing element may include a bellows-like member arranged over a proximal part of the shape imparting element carrier. The assembly may further include a second sealing element arranged in the electrode sheath carrier between the mount and the displacement mechanism for inhibiting the ingress of material into the interior of the electrode sheath carrier.

According to a second aspect of the invention, there is provided a catheter shape imparting element carrier removably mountable to an end of a holder of a modular catheter assembly and accessible externally of the holder, such that, when in use, at least the shape imparting element carrier is removable from the holder while an electrode sheath remains in a patient, the shape imparting element carrier including:

a shape imparting element comprising an elongate tubular member with an actuator received within the tubular member, the actuator being fast with the tubular member at a distal region of the tubular member;

a first member to which one of the tubular member and the actuator is connected; and

a second member, displaceably arranged relative to the first member to which the other of the tubular member and the actuator is connected.

According to another aspect of the invention, there is provided a catheter shape imparting element assembly which includes:

a shape imparting element comprising an elongate tubular member with an actuator received within the tubular member, the actuator being fast with the tubular member at a distal region of the tubular member;

a first member to which one of the tubular member and the actuator is connected; and

2007247769 29 Jun 2011

a second member, displaceably arranged relative to the first member to which the other of the tubular member and the actuator is connected.

In one embodiment, the first member may be a boss received within a catheter handle holder and the second member may be a connector receivable within the holder distally of the boss.

In another embodiment, the first member may be a handle of a catheter assembly and the second member may be a control mechanism displaceably arranged at a distal end of the holder.

According to another aspect of the invention, there is provided an electrical lead which includes:

a lumen defining member, the lumen defining member having a discontinuity along its length to create a proximal part and a distal part;

a plurality of conductors carried on an outer surface of the lumen defining member, the conductors being separated from the lumen defining member at the discontinuity to enable access to be gained to a lumen defined by the distal part, the plurality of conductors electrically bridging the discontinuity;

a covering over the plurality of conductors, the covering being removed at the discontinuity to enable access to be gained to the conductors at the discontinuity; and

at least one electrode carried on the covering at a distal part of the lumen defining member.

The electrical lead may be used with the catheter assembly as described above, a proximal end of the distal part of the lumen defining member being secured to a distal end of the electrode sheath carrier, the electrode sheath carrier defining a passage through which the proximal part of the lumen defining member and the conductors pass to extend internally within the holder and to exit through the proximal end of the holder.

According to another aspect of the invention, there is provided a catheter which includes:

a modular catheter assembly as described above;

an electrode sheath carried on a distal end of the electrode sheath carrier; and

a shape imparting element received within a lumen of the electrode sheath, the shape imparting element passing through the electrode sheath carrier and being secured within the holder via the shape imparting element carrier.

The electrode sheath may be the electrical lead as described above.

2007247769 29 Jun 2011

Unless the context clearly requires otherwise, throughout the description and the claims, the words "comprise", "comprising", and the like are to be construed in an inclusive sense as opposed to an exclusive or exhaustive sense; that is to say, in the sense of "including, but not limited to".

Brief Description of Drawings

Preferred embodiments of the invention will now be described, by way of example only, with reference to the accompanying drawings in which:

Fig. 1 shows an isometric view of a modular catheter assembly, in accordance with a first embodiment of the invention;

Fig. 2 shows a sectional side view of the assembly of Fig. 1;

Fig. 3 shows, on an enlarged scale, a sectional side view of the part of the assembly encircled in Fig. 2 of the drawings;

Fig. 4 shows a three dimensional view of a proximal part of the assembly;

Fig. 5 shows an isometric view of a shape imparting element assembly in accordance with another embodiment of the invention;

Fig. 6 shows a side view of the shape imparting element assembly of Fig. 5;

Fig. 7 shows a plan view of the shape imparting element assembly;

Fig. 8 shows an isometric view of a part of the shape imparting element assembly;

Fig. 9 shows an isometric view of a boss of the shape imparting element assembly;

Fig. 10 shows an isometric view of a connector of the shape imparting element assembly;

Fig. 11 shows an isometric view of a first receiving formation of the modular catheter assembly of Figs. 1-4 of the drawings;

Fig. 12 shows an isometric view of a second receiving formation of the modular catheter assembly of Figs 1-4;

Fig. 13 shows a side view of a modular catheter assembly in accordance with a second embodiment of the invention, with a distal part in a retracted position;

Fig. 14 shows a side view of the assembly of Fig. 13 with the distal part in an extended position;

Fig. 15 shows a sectional end view of part of the assembly of Figs. 13 and 14;

Fig. 16 shows a section end view of a further part of the assembly of Figs. 13 and 14;

Fig. 17 shows a schematic, sectional side view of a part of the assembly of Figs. 13 and 14, in a retracted position;

Fig. 18 shows a sectional side view of the part of Fig. 17 in an extended position;

Fig. 19 shows a sectional side view of a distal part of the assembly of Figs. 13 and 14 in a retracted position;

Fig. 20 shows a schematic, sectional side view of a portion of the part of Fig. 19; and

Fig. 21 shows a schematic representation of a modification to an electrode sheath for use with the assembly of Figs. 13 and 14.

Detailed Description of Exemplary Embodiments

In Figs. 1-12 of the drawings, reference numeral 10 generally designates a modular catheter assembly, in accordance with a first embodiment of the invention. The assembly 10 comprises a holder 12 having a proximal end 14 and a distal end 16. The holder 12 defines an elongate, open passageway 18 through it.

An electrode sheath carrier 20 is mounted to a distal end of the holder 12. A shape imparting element carrier, comprising a boss 22 (shown more clearly in Fig. 9 of the drawings) and a connector 24 (shown more clearly in Fig. 10 of the drawings), is removably mountable within the bore 18 of the holder 12.

The boss 22 and the connector 24 form part of a shape imparting element assembly 26 (Figs. 5-8). The assembly 26 includes a shape imparting element in the form of a steering shaft 28. The steering shaft 28 is of the type having an outer tubular element 30 and an inner actuator 31 (Fig. 4) which is shown in Figs. 5-8 covered by a sleeve 32. The steering shaft 28 is of the type described in the Applicant's co-pending International Patent Application No. PCT/AU2005/000216 dated 18 February 2005 and entitled "A steerable catheter".

Thus, the actuator 31 is fast with the tubular member 30 at a distal end 33 of the steering shaft 28. It is to be noted that the actuator 31 projects from a proximal end of the tubular member 30. The connector 24 is, therefore, connected to the proximal end of the tubular member 30. The actuator 31 passes through the connector 24, a proximal part of the actuator 31 is covered by the sleeve 32 and the boss 22 is mounted at the proximal end of the actuator 31 of the steering shaft 28 as shown in Fig. 4 of the drawings.

The sleeve 32 is received within the proximal end of the connector 24. The sleeve 32 is retained in position by a radially outwardly extending pin 36 being received in an axially extending slot 38 in the connector 24.

The connector 24, itself, has an engaging formation in the form of a radially outwardly extending pin 40 arranged distally of the slot 38. A waisted region 42 is defined in the connector 24 distally of the pin 40.

The boss 22 has an enlarged, outer cylindrical formation 44 which can be gripped for manipulating the assembly 26. As illustrated in Figs. 2 and 4 of the drawings, the enlarged outer formation 44 projects outwardly from the proximal end 14 of the holder 12 to be externally accessible.

The boss 22 has an engaging formation in the form of a pair of opposed radially outwardly extending protuberances or lugs 46, the purpose of which will be described in greater detail below.

The assembly 10 includes a first receiving formation, or component, 48 arranged at the proximal end 14 of the holder 12 and a second, receiving formation, or component, 50 arranged in a slide support 52 at the distal end 16 of the holder 12. The component 48 has a keyway-shaped slot 54 defined in an outer face 56. The keyway slot 54 is shaped to allow the passage of the lugs 46 of the boss 22 through it. The spacing between an operatively inner end of the enlarged formation 44 and the lugs 46 is such that, when the boss is pushed home relative to the component 48, the lugs 46 are arranged distally of the keyway slot 54. A quarter turn of the boss 22 therefore locks the boss 22 relative to the formation 48.

It is to be noted that openings 58 are arranged on opposed sides of the slot 54 in the face 56 of the formation 48. These openings 58 allow electrical connectors for an electrode sheath (not shown) to pass through the bore 18 of the holder 12 and out through the proximal end of the holder 12. The openings 58 also allow the passage of an irrigation tube when the catheter assembly 10 is used as an irrigation catheter.

The component 50 has a proximal opening defining member 60 defining a keyed opening 62. The member 60 is mounted to the end of a sleeve 64. The sleeve 64 supports a socket defining member 66 defining a pair of opposed, threaded sockets 68 in which grub screws 71 (Fig. 3) are receivable.

The sleeve 64 has an L-shaped slot 70 defined in it, an axially extending part of the slot 70 being in communication with a key 72 of the keyed opening 62. In use, the pin 40 of the connector 24 is received within the key 72 of the opening 62 and into the axially extending part of the slot 70. When the assembly 26 is rotated through 90°, the pin 40 is received in a circumferentially extending part of the L-shaped slot 70 locking the shape imparting element assembly 26 in position relative to the catheter assembly 10. Thus, the arrangement of the L-shaped slot 70 of the component 50 functions as a bayonet-type locking system to lock the assembly 26 in position relative to the assembly 10. Once again, it is to be noted that the component 50 has a substantially flattened shape to allow the passage of connectors and/or an irrigation tube past it.

As described above, the component 50 is slidably mounted in the slide support 52. The slide support 52 supports a slide 74. The slide 74 functions as a control mechanism for controlling bending of the distal end 32 of the steering shaft assembly 26. The slide 74 is secured to the component 50 via the grub screws 71, the grub screws 71 engaging the waisted region 42 of the connector 24 to lock the slide 74 to the connector 24. The slide support 52 is fast with the distal end 16 of the holder 12 via grub screws (not shown) received in transversely extending bores 76 in the slide support 52.

The slide 74 sealing engages the support 52 via a pair of sealing members, such as O-rings, 78 arranged on opposed sides of the component 50.

To facilitate insertion of the steering shaft 28 through the holder 50 and the support 52, guide tubes 80 and 81 are mounted to the component 50 and to the support 52, respectively.

A distal part of the slide 74 supports a displacement mechanism 82. The displacement mechanism 82 is axially displaceable relative to the slide 74 and, therefore, relative to the holder 12. The displacement mechanism 82 is also in the form of a slide and carries the electrode sheath carrier 20 on a distal part. The slide 82 is secured to the slide 74 via a grub screw 84. The grub screw 84 is received in an axially extending slot 86 in a distal part of the slide 74. The slot 86 limits the travel of the slide 82 relative to the slide 74.

Once again, to inhibit the ingress of material into the interior of the assembly 10, the slide 82 sealing engages the slide 74 via a sealing member, such as an O-ring 88.

A further guide element 90 is arranged at a distal region of the slide 82 for facilitating passage of the steering shaft 28. A proximal end of the guide element 90 has a funnel shaped opening 92 which facilitates insertion of the distal end 32 of the steering shaft 28 into the guide element 90. It is to be noted that a distal end of the guide tube 80 terminates in close proximity to the opening 92 of the element 90, when the slide 82 is in a retracted position relative to the slide 74, to assist in inserting the steering shaft 28 into the opening 92.

In use, with this embodiment, a desired shape imparting assembly 26, eg. the steering shaft 28, is mounted to the holder by inserting the boss 22 and the connector 24 into their associated components 48 and 50, respectively. The boss 22 and the connector 24 are locked to their associated components 48 and 50, respectively, by turning the boss 22 through 90°. An electrode sheath (not shown) of the assembly 10 can then be steered through the vasculature of a patient to the desired site in the patient's body. If it is necessary to use another shape imparting element 26, the one in use is removed and is replaced by such other shape imparting element 26. This can be effected while the electrode sheath remains *in situ.*

Further, after use, the shape imparting element 26, being the most expensive part of the assembly 10 can be removed for sterilisation and re-use. The remainder of the assembly 10 can be disposed of.

Referring now to Figs. 13-21 of the drawings, a second embodiment of a modular catheter assembly is illustrated. With reference to the previous drawings, like reference numerals refer to like parts, unless otherwise specified.

In this embodiment, the holder 12 defines a blind bore 94 (Figs. 17 and 18) at the distal end 16. The boss 22 of the shape imparting element carrier has a shaft 96 which is slidably received within the bore 94. The shaft 96 has retaining formations in the form of a pair of opposed clips 98. The clips 98 are received in channels 100 defined in the bore 94 which limit the degree of axial displacement of the shaft 96 relative to the holder 12. Seals, in the form of O-rings 102, are arranged on opposed sides of the clips 98 for sealing the bore 94 to inhibit the ingress of foreign material into the bore 94.

A tubular receiving formation 104 extends proximally into the holder 12 from a proximal end of the bore 94. The actuator of the shape imparting element assembly 26 (not shown in this embodiment) is received in the tubular receiving formation 104 after passing through a passage 106 in the shaft 96 of the boss 22.

A distal end of the shaft 96 supports an engageable element 108 via which an operator can displace the boss 22 axially relative to the holder 12. The passage 106 opens out into a distal end of the engageable element 108. The tubular member 30 of the steering shaft 28 is attached to the distal end of the engageable element 108 about the opening of the passage 106 in a sealing manner.

To inhibit the ingress of material into the bore 94 of the holder 12, a seal, in the form of a bellows-like element, 110 is arranged about the shaft 96 between the engageable element 108 and the distal end 16 of the holder 12.

The electrode sheath carrier 20 is mounted on a body member 112 (Fig. 19). The body member 112 slidably supports the displacement mechanism 82. As illustrated more clearly in Fig. 20 of the drawings, the displacement mechanism 82 clips to the body member 112 via a pair of opposed clips 114. The clips 114 are carried on the body member 112 and each clip 114 is received in an axially extending channel 116 defined in the displacement mechanism 82. In Fig. 13 of the drawings, the displacement mechanism 82 is shown in a retracted position on the body member 112. The displacement mechanism 82 is shown in an extended position relative to the body member 112 in Fig. 14 of the drawings.

An elongate mount 115 extends from a proximal end of the body member 112. The mount 115 is eccentrically arranged on the proximal end of the body member 112 and is received in a channel 117 (Fig. 15) of the holder 12. The channel 117 is arranged alongside, but not in communication with, the bore 94 at the distal region of the holder 12. It is to be noted that the channel 117 defines retaining formations 118 which retain the mount in position relative to the holder 12.

A proximal end of the body member 112 has a flared opening 120 to facilitate the insertion of the steering shaft 28 through the body member 112.

A sealing assembly 122 is, optionally, carried on the distal end of the body member 112. The sealing assembly 122 is used when the catheter with which the assembly 10 is used is an irrigation catheter. The sealing assembly 122 supports a sealing element 124 arranged about a passage 126 in the sealing assembly 122. The steering shaft 28 projects through the passage 126, in use. The sealing element 124 seals about the tubular member 30 of the steering shaft 28 and inhibits the ingress of foreign material and liquid into the body member 112. The sealing element 124 is a resiliently flexible element and is received in a Luer-type lock 128. The lock 128 carries an external screw thread 130 and a knurled wheel 132 is received on the threaded lock 128. The wheel 132 is accessible through a pair of opposed openings 134 in the sealing element 122. The sealing element is urged into sealing abutment with the tubular member 30 of the steering shaft 28 by rotating the wheel 132 in a first direction. Conversely, to release the sealing element 124 from sealing abutment with the tubular member 30 of the steering shaft 28, the wheel 132 is rotated in the opposite direction. It will be appreciated that, if the catheter is not an irrigation catheter, the assembly 122 can be omitted with the electrode sheath carrier 20 being secured directly to the distal end of the body member 112.

As shown in greater detail in Fig. 19 of the drawings, the passage 126 communicates with an irrigation passage 136. The irrigation passage 136 follows a tortuous path through a wall 138 of the sealing element 122. The passage 136 continues as a further passage 140 in the body member 112.

As shown more clearly in Fig. 16 of the drawings, the passage 136 is arranged alongside another passage 142. Electrical conductors from an electrode sheath 144 (Fig. 21) are received through the passage 142. Thus, an irrigation tube (not shown) received through the passage 136 and the electrical conductors extending through the passage 142 pass through the proximal end of the body member 112 and beneath the holder 12, in use. In particular, the electrical conductors of the electrode sheath 144 are connected to a connector 146 (Fig. 21) arranged proximally of the proximal end of the holder 12.

In Fig. 21, an electrical lead 150 defining the electrode sheath 144 is shown. The electrical lead 150 has the connector 146 at its proximal end and electrodes 148 at its distal end. The electrical lead 150 is substantially greater in length than the length of electrode sheath 144 required for use as a catheter. The electrical lead 150 has a distal part 152 which is of the requisite length to form the electrode sheath 144 of the

catheter and a proximal part 154. The proximal part 154 and the distal part 152 are electrically connected to each other via conductors 156 of the electrical lead 150. However, the proximal part 154 and the distal part 152 are mechanically separated from each other via a discontinuity 158, the discontinuity 158 being electrically bridged by the conductors 156.

The discontinuity 158 is formed by removing an outer covering 160 from the electrical lead 150 in the region where the discontinuity 158 is to be formed. The conductors 154 are unwound from a lumen defining portion 162 of the electrical lead 150. The electrical lead 150 is cut at the region to form the discontinuity and the proximal part 154 and the distal part 152 of the electrical lead 150. A proximal end of the lumen defining portion 162 of the distal part 152, which functions as the electrode sheath 144, is secured to a distal end of the electrode sheath carrier 20. The conductors 156 are threaded through the opening 142 and the proximal part 154 of the electrical lead 150 passes through the proximal end of the body member 112 and beneath the holder 12 to be connected via the connector 146 to a patient cable or other equipment (not shown).

In this embodiment of the invention, the holder 12 together with the shape imparting element assembly 26 secured thereto is reusable. The part of the assembly 10 arranged distally of the engageable element 108 is disposable. Thus, after use, the mount 115 is removed from the channel 117 and is disposed of. A new distal part of the assembly 10 is then attached to the holder 12 for subsequent use. Alternatively, while in use, the holder 12 with the shape imparting element assembly 26 attached thereto can be removed from the distal part and replaced with another holder 12 carrying a different shape imparting element assembly 26. For example, initially, a modular catheter assembly 10 using a steering shaft 28 may be used to steer a distal end of the catheter to the desired site in a patient's body. At the desired site, it may be desired to use a fixed curved stylet. While the catheter is *in situ*, the holder 12 with the steering shaft 20 secured thereto may be detached from the body member 112 by removing the mount 115 from the channel 117. A different holder 12 carrying a fixed curved stylet at its distal end may then be mounted on the mount 115 with the fixed curved stylet being threaded into the electrode sheath which is still *in situ*.

It is therefore an advantage of the invention that a modular catheter assembly 10 is provided which makes use of a reusable part, being at least the shape imparting assembly 26. Parts of the assembly 10 which come into contact with bodily fluids can be disposed of. In this regard, it is to be noted that the holder 12, having no electrical connectors therein, is a low cost item. In addition, in the case of the first embodiment,

because the holder 12 does not have any electrically conductive materials therein, it is easier to dispose of, for example, to a recycling plant. In the case of the second embodiment, a similar consideration applies in respect of the body member 112 and its associated parts. In other words, there are no electrically conductive elements in the part 112 and, thus, the part 112 and its associated parts can be disposed of in an environmentally friendly manner.

In addition, the ease with which the boss 22 can be detached from the holder 12 or the distal part 112, as the case may be, improves the versatility of the assembly allowing replacement shape imparting elements to be used, as desired and with ease.

Further, when the handle of the catheter has an electrical connector at its distal end, it is necessary to insert the shape imparting element through the connector. The connector has a very small opening, typically of a diameter in the order of 1-2 mm, centrally arranged in the connector. The opening is surrounded by electrical connections of the connector and it is difficult for a clinician to insert the shape imparting element into the opening of the connector. With the absence of such a connector, a much larger opening, which may be funnel-shaped, may be provided at the distal end of the holder which makes it much easier to insert the shape imparting element through the distal end of the handle into the catheter sheath.

It will be appreciated by persons skilled in the art that numerous variations and/or modifications may be made to the invention as shown in the specific embodiments without departing from the spirit or scope of the invention as broadly described. The present embodiments are, therefore, to be considered in all respects as illustrative and not restrictive.

2007247769 29 Jun 2011

THE CLAIMS DEFINING THE INVENTION ARE AS FOLLOWS:

1. A modular catheter assembly which includes:

a holder having a proximal end and a distal end;

an electrode sheath carrier mounted on the distal end of the holder, the electrode sheath carrier being configured for attachment to an electrode sheath that is, when in use, inserted into a patient; and

a shape imparting element carrier removably mountable to an end of the holder and being accessible externally of the holder, such that, when in use, at least the shape imparting element carrier is removable from the holder while the electrode sheath remains in the patient.

2. The assembly of claim 1 in which the holder comprises an elongate element defining an axially extending bore.

3. The assembly of claim 2 in which the shape imparting element carrier comprises a boss having a proximal end and a distal end.

4. The assembly of claim 3 which includes a shape imparting element carried on the shape imparting element carrier, the shape imparting element comprising an elongate tubular member with an actuator received in the elongate tubular member, at least one of the actuator and the tubular member being mounted to the distal end of the boss.

5. The assembly of claim 4 in which the boss is received within the bore of the holder.

6. The assembly of claim 4 or claim 5 in which the shape imparting element carrier comprises a connector arranged distally of the boss and connected to the boss, one of the tubular member and the actuator of the shape imparting element being fast with the connector and the other of the tubular member and the actuator being fast with the boss.

7. The assembly of claim 6 in which the bore of the holder is an open passageway extending from the proximal end of the holder to the distal end of the holder, the holder defining receiving formations and the boss and the connector comprising corresponding engaging formations which engage their associated receiving formations in the bore of the holder for retaining the shape imparting element in position relative to the holder.

2007247769 29 Jun 2011

8. The assembly of claim 7 in which a first receiving formation is arranged at the proximal end of the holder and a second receiving formation is arranged distally of the first receiving formation, the second receiving formation being displaceably arranged within the bore of the holder.

9. The assembly of claim 8 in which the second receiving formation is fast with a control mechanism, the control mechanism being axially displaceably arranged on the holder and being accessible externally of the holder.

10. The assembly of claim 9 in which the electrode sheath carrier is mounted on a displacement mechanism, the displacement mechanism being arranged on the distal end of the holder.

11. The assembly of claim 10 in which the displacement mechanism is displaceably arranged relative to the control mechanism on the holder.

12. The assembly of any one of claims 8 to 11 in which both the first receiving formation and the second receiving formation are shaped to permit the passage of at least electrical conductors past the first receiving formation and the second receiving formation.

13. The assembly of claim 2 in which the bore of the holder is a blind bore defined at the distal end of holder.

14. The assembly of claim 13 which includes a shape imparting element carried on the shape imparting element carrier, the shape imparting element comprising an elongate tubular member with an actuator received in the elongate tubular member.

15. The assembly of claim 14 in which the shape imparting element carrier is removably received within the blind bore, one of the tubular member and the actuator of the shape imparting element being fast with the shape imparting element carrier and the other of the tubular member and the shape imparting element being fast with the holder.

16. The assembly of claim 15 in which the shape imparting element carrier functions as a control mechanism for controlling the shape of the shape imparting element carried

on the shape imparting element carrier, the control mechanism being axially displaceable relative to the holder.

17. The assembly of claim 16 in which the electrode sheath carrier is arranged distally of the shape imparting element carrier, the electrode sheath carrier having a proximally extending mount received in a distal part of the holder.

18. The assembly of claim 17 in which the electrode sheath carrier includes a displacement mechanism displaceably arranged, axially, on the mount for effecting axial displacement of the electrode sheath relative to the shape imparting element, in use.

19. The assembly of any one of claims 15 to 18 which includes a first sealing element interposed between the shape imparting element carrier and the distal end of the holder for inhibiting the ingress of material into the bore of the holder.

20. The assembly of claim 18 which includes a second sealing element arranged in the electrode sheath carrier between the mount and the displacement mechanism for inhibiting the ingress of material into the interior of the electrode sheath carrier.

21. A catheter shape imparting element carrier removably mountable to an end of a holder of a modular catheter assembly and accessible externally of the holder, such that, when in use, at least the shape imparting element carrier is removable from the holder while an electrode sheath remains in a patient, the shape imparting element carrier including:

a shape imparting element comprising an elongate tubular member with an actuator received within the tubular member, the actuator being fast with the tubular member at a distal region of the tubular member;

a first member to which one of the tubular member and the actuator is connected; and

a second member, displaceably arranged relative to the first member to which the other of the tubular member and the actuator is connected.

22. The carrier of claim 21 in which the first member is a boss received within the holder and the second member is a connector receivable within the holder distally of the boss.

2007247769 29 Jun 2011

23. The carrier of claim 21 in which the first member is the holder and in which the second member is a control mechanism displaceably arranged at a distal end of the holder.

24. A catheter which includes:

a modular catheter assembly as claimed in any one of claims 1 to 20;

an electrode sheath carried on a distal end of the electrode sheath carrier; and

a shape imparting element received within a lumen of the electrode sheath, the shape imparting element passing through the electrode sheath carrier and being secured within the holder via the shape imparting element carrier.

25. A modular catheter assembly; a catheter shape imparting element carrier; or a catheter substantially as herein described with reference to any one of the embodiments of the invention illustrated in the accompanying drawings and/or examples.

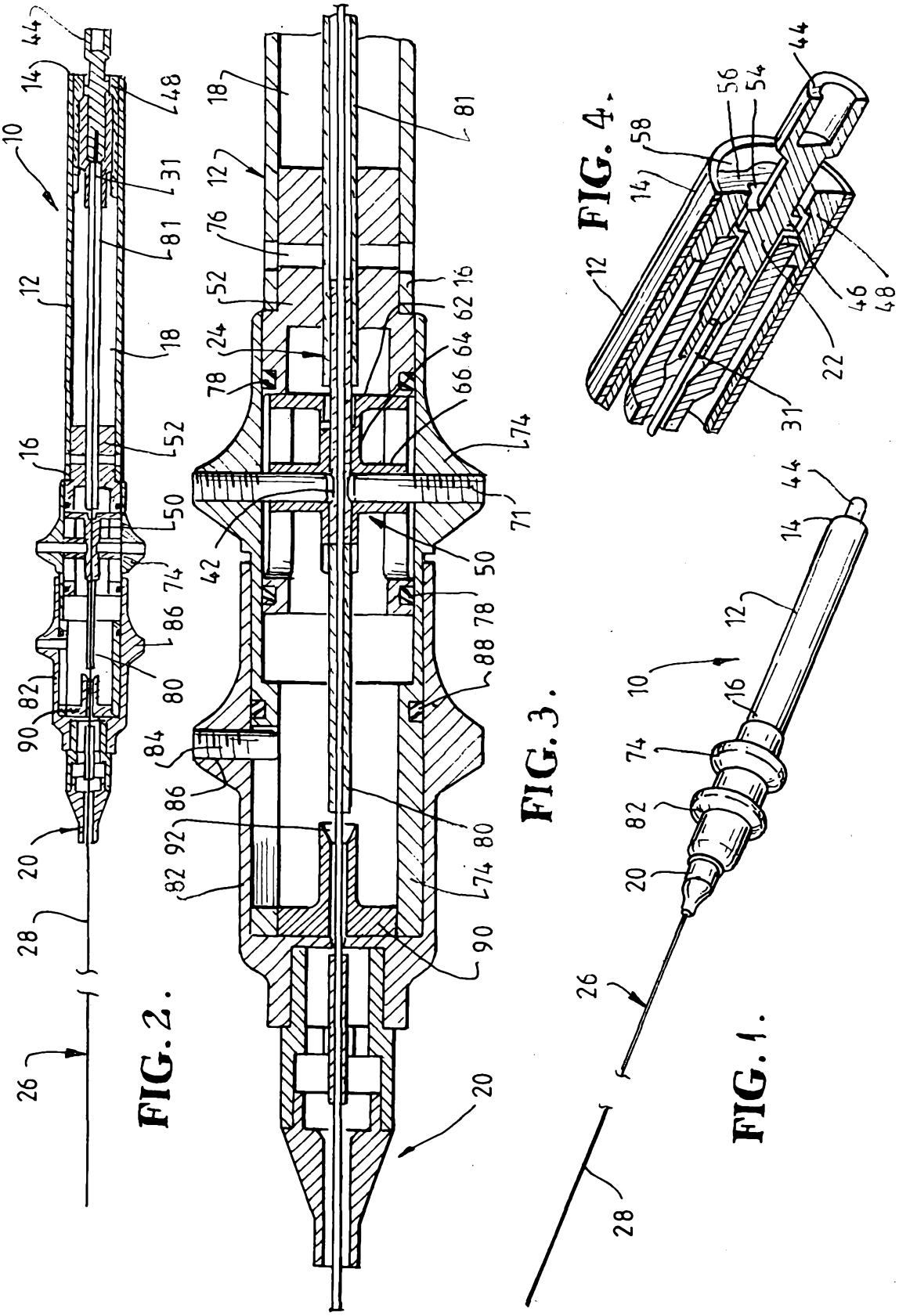

FIG. 1.

FIG. 2.

FIG. 3.

FIG. 4.

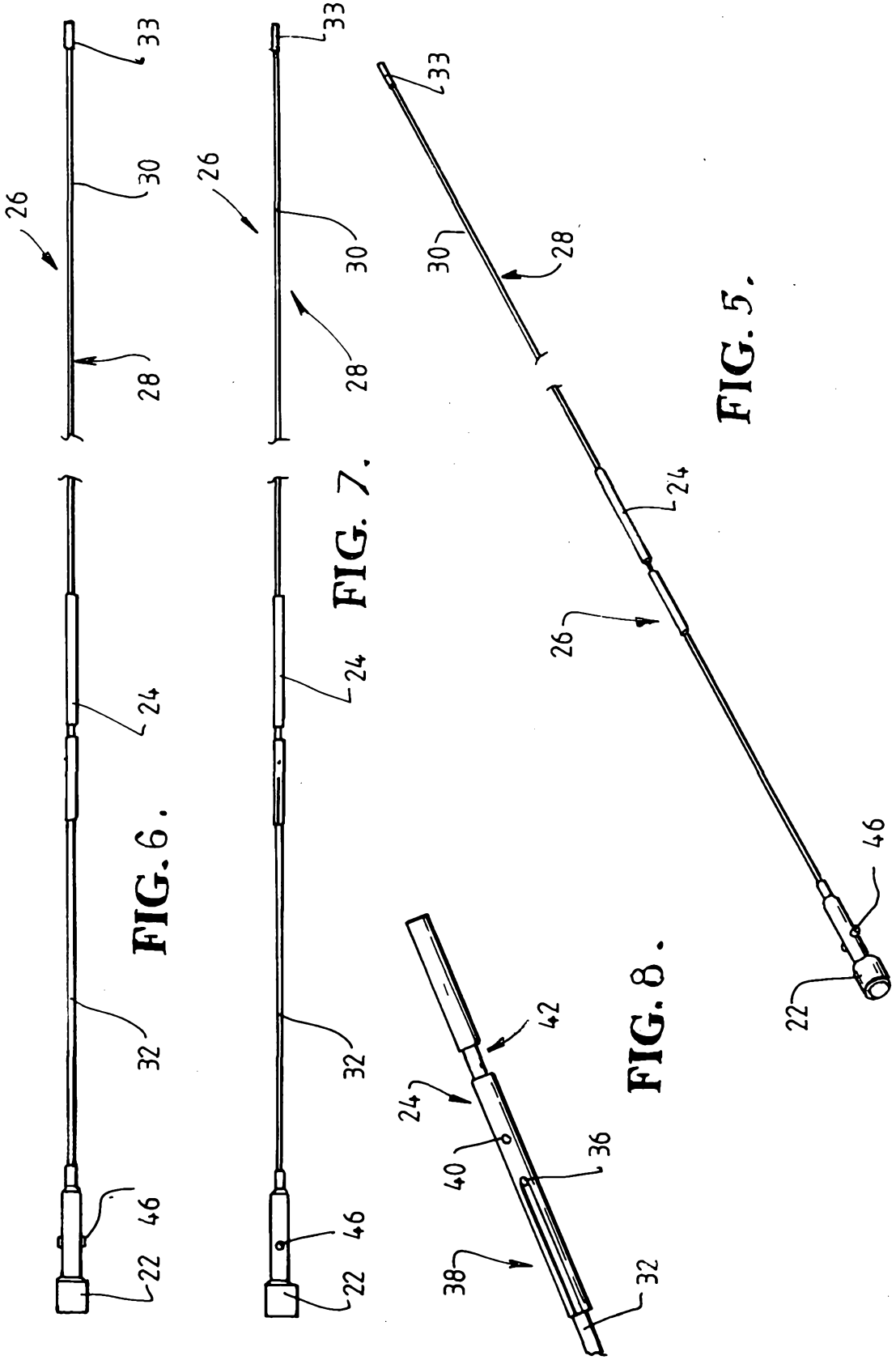
26
33
30
28
24
32
46
22
FIG. 6.
26
33
30
28
24
32
46
22
FIG. 7.
33
30
28
24
26
46
22
FIG. 5.
42
24
40
36
38
32
FIG. 8.

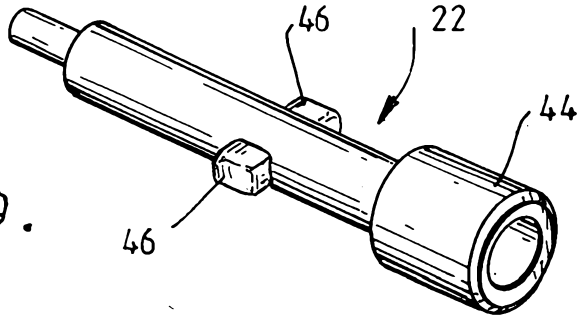

FIG. 9.

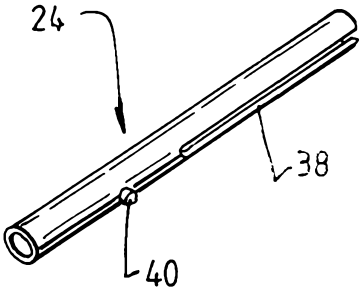

FIG. 10.

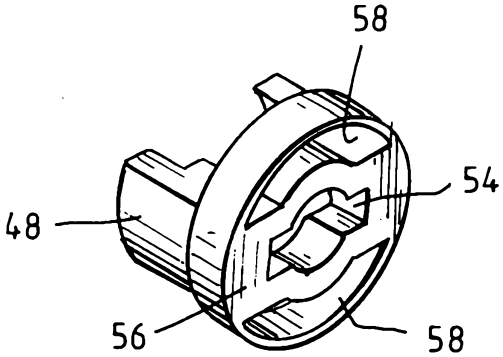

FIG. 11.

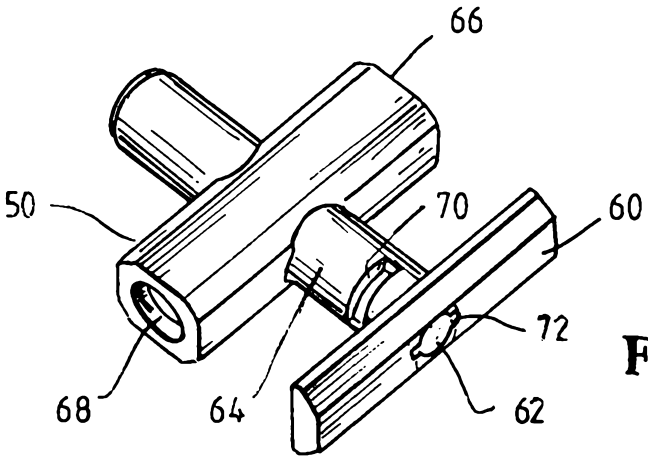

FIG. 12.

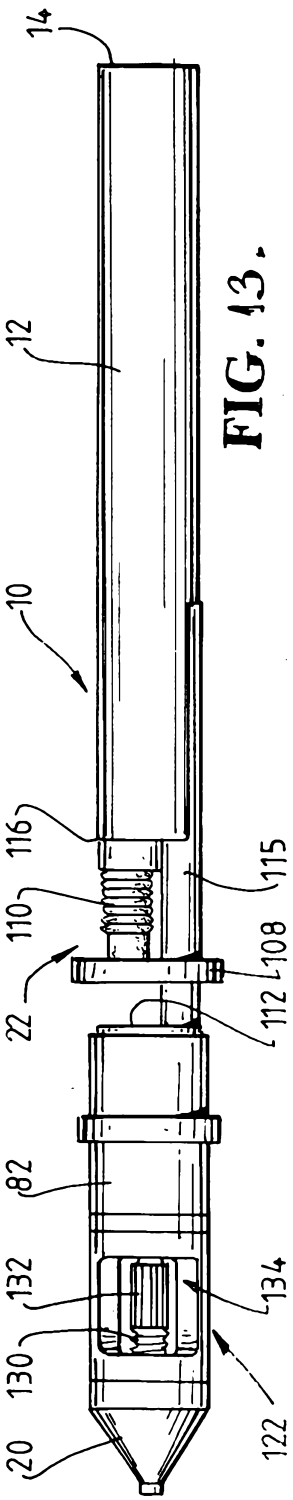

FIG. 13.

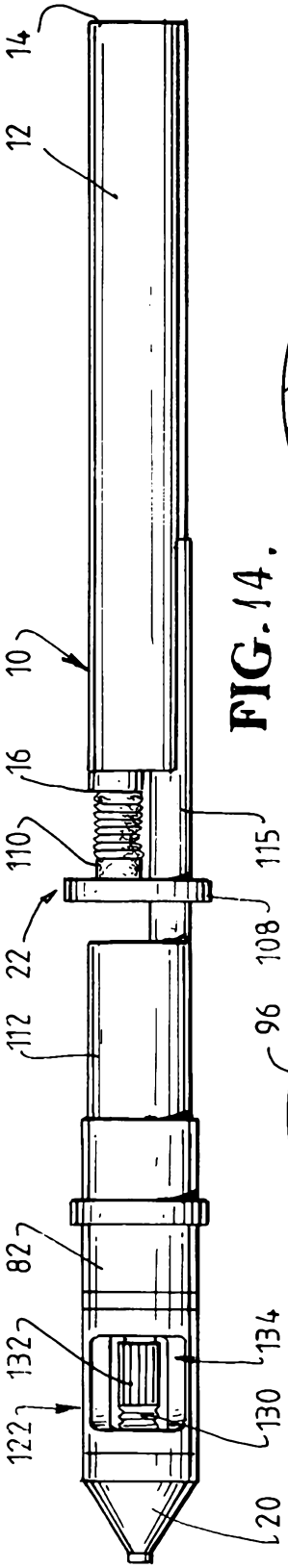

FIG. 14.

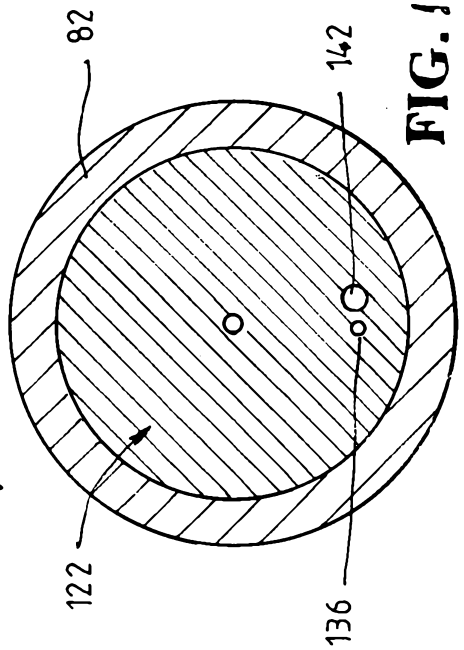

FIG. 16.

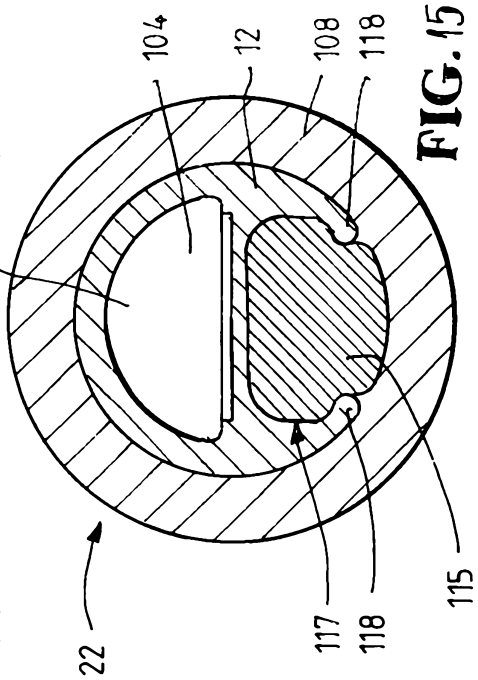

FIG. 15.

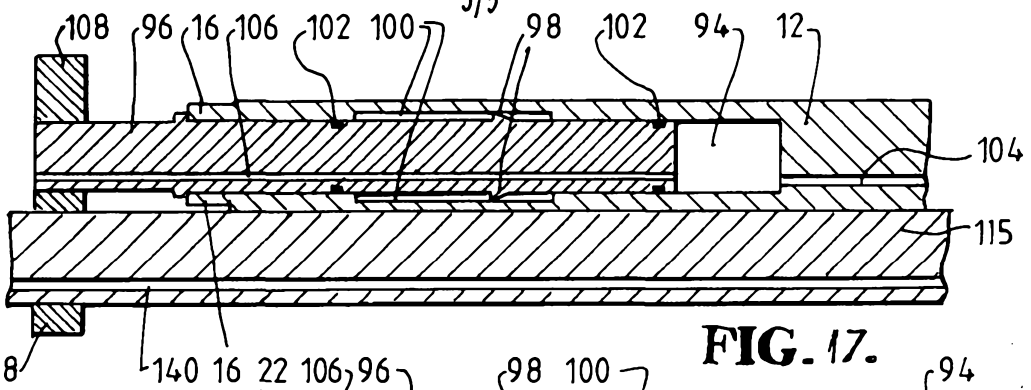

FIG. 17.

FIG. 18.

FIG. 19.

FIG. 20

FIG. 21.