Aug. 25, 1936. H. W. PRICE ET AL 2,051,893

CLUTCH CONTROL MECHANISM

Filed Oct. 10, 1931

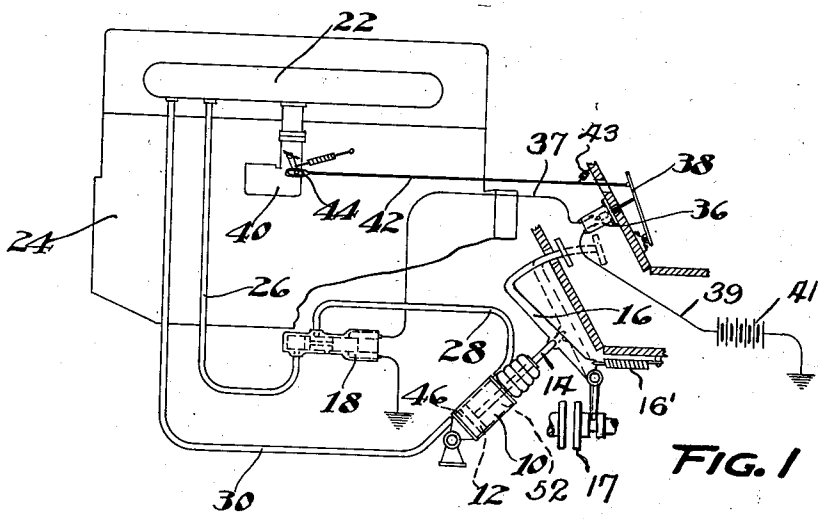


FIG. 1

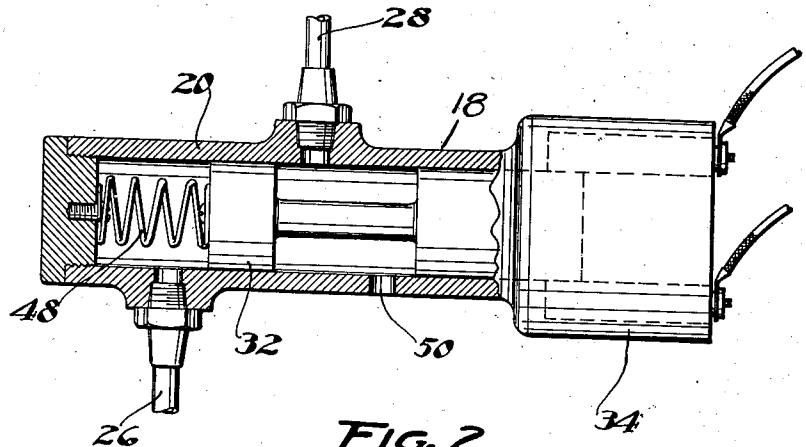


FIG. 2

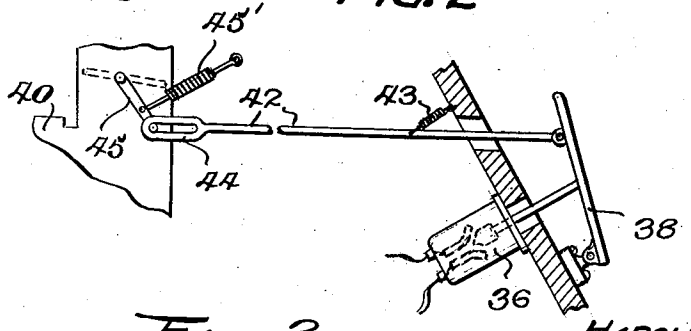


FIG. 3

INVENTOR.
HAROLD W. PRICE
EARL R. PRICE
BY H. O. Clayton
ATTORNEY

Patented Aug. 25, 1936 2,051,893

# UNITED STATES PATENT OFFICE

2,051,893

## CLUTCH CONTROL MECHANISM

Harold W. Price and Earl R. Price, South Bend, Ind., assignors to Bendix Aviation Corporation, South Bend, Ind., a corporation of Delaware

Application October 10, 1931, Serial No. 568,060

5 Claims. (Cl. 192—.01)

This invention relates to control mechanism for an automotive vehicle, and particularly to power operated means for regulating the engagement and disengagement of the clutch.

An object of the invention is to provide an accelerator controlled electrically operated valve, the latter controlling the clutching and declutching functions of a vacuum operated fluid motor.

The more important object of the invention is to provide a suspended-in-vacuum type of fluid motor adapted for operation of the clutch; that is, a motor which is energized by the admission of air at atmospheric pressure to one side of its reciprocable piston and deenergized by withdrawal of the admitted air.

A further object of the invention is to so construct the mechanism that the rate of clutch engagement may be varied by the opening of the engine throttle, the movement of the driving clutch plate being decelerated as the throttle is being opened.

Other objects of the invention and desirable details of construction will become apparent from the following detailed description of a preferred embodiment, which embodiment is disclosed in the accompanying drawing, in which:

Figure 1 is a diagrammatic view of the power operated clutch controlling mechanism constituting the invention; and

Figure 2 is a longitudinal sectional view through the electrically operated control valve.

Figure 3 is an enlarged view of the accelerator pedal and its associated controls.

In that embodiment of the invention selected for illustration there is disclosed, in Figure 1, a fluid motor comprising a double-ended cylinder 10 housing a reciprocable piston 12 positively connected by rod 14 with the clutch pedal 16 of a conventional automotive clutch mechanism comprising clutch plate 17. A three-way piston type of control valve 18 is adapted to control the operation of the fluid motor. The valve preferably comprises a casing 20 in air transmitting communication with the intake manifold 22 of an internal combustion engine 24, via conduit 26, and in like communication with the fluid motor, via conduit 28. The other end of the fluid motor is also connected to the manifold 22 by means of a conduit 30.

A reciprocable piston 32 of the control valve is adapted to be electrically operated by a solenoid 34 mounted on the end of the valve casing, the circuit including leads 37 and 39 and battery 41 being completed through the ground connection by the closing of a switch 36 operated by the accelerator pedal 38. The pedal 38 normally urged to the right by spring 43 is connected to the carburetor 40 by rod 42, the latter having a lost-motion connection at 44 with the throttle member 45 of the carburetor: the member 45 is returned to its idling position by a spring 45'.

The operation of the aforementioned clutch control mechanism is as follows: At closed throttle there exists, within the manifold 22, a vacuum of some twenty inches of mercury, this by virtue of the pumping action of the engine pistons; therefore, the left compartment 46 of the fluid motor is, at this time, evacuated. The switch 36 being open at closed throttle deenergizes the solenoid 34 and permits the valve spring 48, secured to the valve casing 20 and to the piston 32, to move the valve piston to the left, Figure 2, admitting air at atmospheric pressure via a port 50 in the valve casing and conduit 28 to the right compartment 52 of the motor. The motor piston 12 and its connected clutch pedal are thus moved, under the atmospheric load, to effect a disengagement of the clutch, all as disclosed in Figure 1.

Upon actuation of the accelerator pedal the switch 36 is first closed, energizing the solenoid 34 to move the valve piston 32 to the right and register conduits 26 and 28. By virtue of the then existing maximum vacuum in the manifold the air in the right compartment 52 of the motor is quickly withdrawn to effect a rather quick initial movement of the clutch pedal under the action of the conventional clutch spring 16'. After the lost motion at 44 is taken up the throttle is opened, decreasing the vacuum in the manifold and, accordingly, progressively decreasing the rate of evacuation of the remaining air from the right compartment of the motor with a consequent deceleration of the clutch pedal. The two-stage operation thus obtained may be explained when it is considered that with closed throttle and with both sides of the cylinder connected to the manifold, a high degree of vacuum exists in the cylinder which produces a low air density, which relatively low density permits of rapid movement of the piston in displacing the air within the cylinder. When the throttle is opened the high degree of vacuum is destroyed, and the density of the air in the cylinder is nearly that of atmospheric and the dash pot action therefore considerably greater, thus slowing down the further movement of the piston and clutch. This, however, is the end desired for it permits a slow clutch plate movement just prior to the clutch plate driving engagement. The mode of movement of the clutch pedal during the engagement of the

clutch is thus a function of the mode of operation of the accelerator, the rate of efflux of air from the motor, which determines the clutch engaging movement, being different for each setting of the accelerator in opening the throttle, each throttle opening effecting a different degree of manifold pressure in the manifold. The construction is such that a pressure differential of zero upon the piston 12 exists with the clutch plates in driving engagement.

There is thus provided in a vacuum operated clutch controlling mechanism a means for automatically effecting a quick initial movement of the clutch pedal and a buffed or graded final movement to thereby simulate manual operation of the clutch.

While one illustrative embodiment has been described, it is not our intention to limit the scope of the invention to that particular embodiment, or otherwise than by the terms of the appended claims.

We claim:

1. In an automotive vehicle having an internal combustion engine, an intake manifold, a throttle, a clutch and means for operating the throttle, a double-ended fluid motor having its piston operatively connected to the clutch, separate fluid connections extending from each end of the motor to the manifold, a three-way control valve interposed in one of said connections, means, operable by said throttle operating means, for opening said valve when the throttle is open to thereby place the manifold in circuit with both sides of the motor, said last mentioned means also serving to close the valve, to cut off communication between the manifold and one side of the motor and vent that side of the motor to atmosphere, when the throttle is closed.

2. In an automotive vehicle having an internal combustion engine, an intake manifold, a throttle, a clutch, and means for operating the throttle, a double-ended fluid motor having its piston operatively connected to the clutch, separate fluid connections extending from each end of the motor to the manifold, a three-way control valve interposed in one of said connections, electrically operable means, including a solenoid for opening the aforementioned valve, said means being operable by said throttle operating means, for opening said valve when the throttle is opened to thereby place the manifold in circuit with both sides of the motor, said last mentioned means also serving to close the valve, to cut off communication between the manifold and one side of the motor and subsequently vent that side of the motor to atmosphere, when the throttle is closed.

3. In an automotive vehicle having an internal combustion engine, an intake manifold, a throttle, an accelerator, a clutch, and means for operating the throttle comprising an accelerator operated linkage having a lost motion connection with the throttle, a double-ended fluid motor operably connected to the clutch, fluid transmitting means interconnecting said manifold and motor, an accelerator operated control valve interposed in said fluid transmitting means for initiating the clutch disengaging and engaging operations of said motor, said motor functioning, with the operation of said accelerator to take up the lost motion in the connection between the accelerator and throttle, to effect a relatively rapid clutch engaging movement, said motor further functioning, with an opening of the throttle, to effect a rate of clutch engagement in proportion to the degree of throttle opening.

4. In an automotive vehicle having an internal combustion engine and a clutch, pressure differential operated power means for operating the clutch, said power means deriving its power from the internal combustion engine, valvular means for initiating the clutch disengaging and engaging operations of said power means, and other valvular means selectively operable to either effect a two-stage engagement of the clutch or a substantially uniform and relatively rapid engagement of the clutch.

5. In an automotive vehicle having an internal combustion engine, an accelerator and a clutch, pressure differential operated power means for operating the clutch, said power means deriving its power from the internal combustion engine, valvular means for initiating the clutch disengaging and engaging operations of said power means, and other accelerator controlled valvular means selectively operable to either effect a two-stage engagement of the clutch or a uniform and relatively rapid engagement of the clutch.

HAROLD W. PRICE.
EARL R. PRICE.