Jan. 7, 1947. G. R. HAWES 2,414,041

KEY HOLDER SUPPORT

Filed Oct. 9, 1943

Fig. 1.

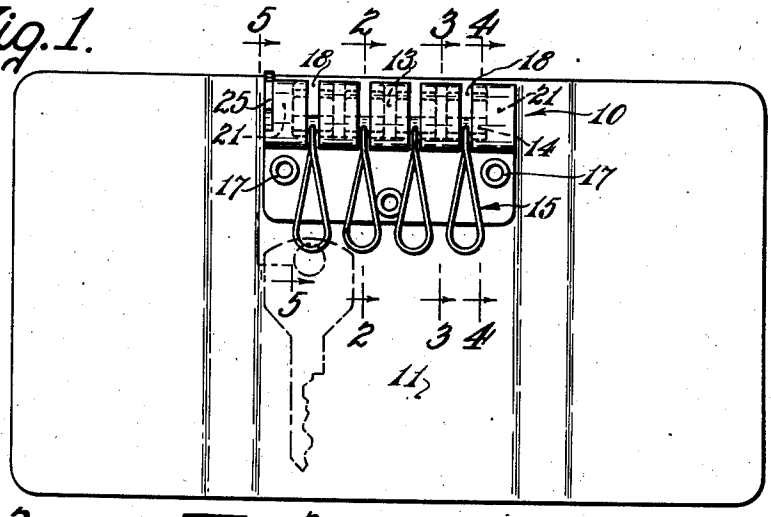

Fig. 2.

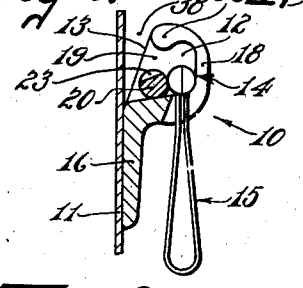

Fig. 3.

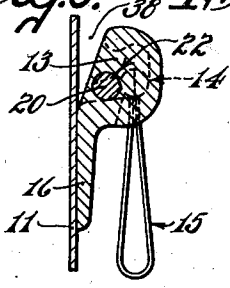

Fig. 4.

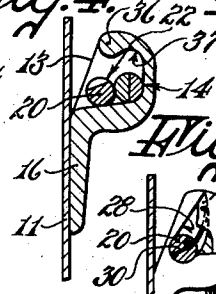

Fig. 5.

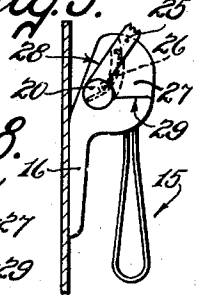

Fig. 8.

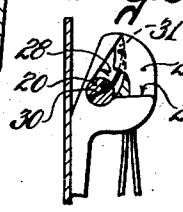

Fig. 9.

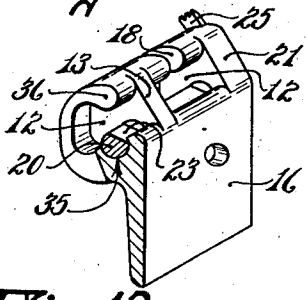

Fig. 6.

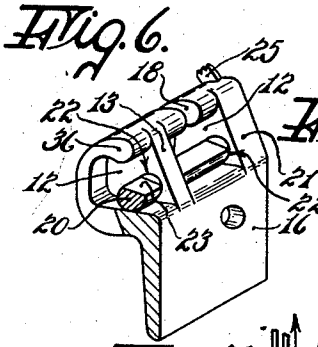

Fig. 10.

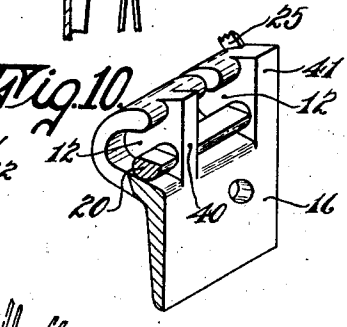

Fig. 12.

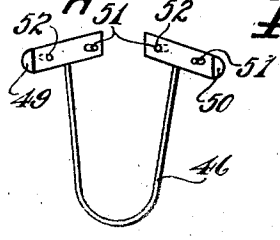

Fig. 11.

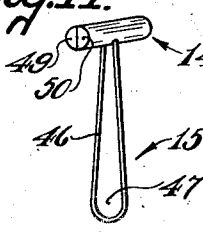

Fig. 7.

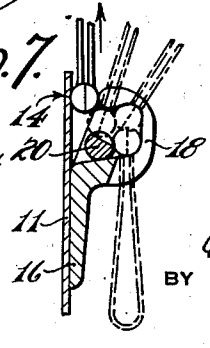

INVENTOR
GEORGE R. HAWES
BY
Chapin & Neal
ATTORNEYS

Patented Jan. 7, 1947

2,414,041

UNITED STATES PATENT OFFICE

2,414,041

KEY HOLDER SUPPORT

George R. Hawes, Longmeadow, Mass., assignor to Buxton, Incorporated, Springfield, Mass., a corporation of Massachusetts

Application October 9, 1943, Serial No. 505,677

7 Claims. (Cl. 70—456)

1

This invention relates to key cases and more particularly to an improved key holder support by means of which the individual key holders are releasably attached to the case and supported therein for swinging movement in and out of the case in the use of the keys.

One object of the invention is to provide a device of this character which combines lightness and strength with the needed security in the releasable attachment of the key holders to the support.

A further object is the provision of an improved key holder and key holder support combination.

Another object is to provide a construction which may be die cast or molded, making available various thermo-plastic and heat setting compositions, as well as metals and alloys, for its construction.

Other and further objects residing in the form of the parts and the details of construction will become apparent from the following specification and claims.

In the accompanying drawing,

Fig. 1 is a front elevation of a key holder support, embodying my invention, mounted in a case, the latter being open;

Fig. 2 is a sectional view substantially on line 2—2 of Fig. 1;

Fig. 3 is a sectional view substantially on line 3—3 of Fig. 1;

Fig. 4 is a sectional view substantially on line 4—4 of Fig. 1;

Fig. 5 is a sectional view substantially on line 5—5 of Fig. 1;

Fig. 6 is a fragmentary isometric view of the support;

Fig. 7 is a sectional view similar to Fig. 2 but showing the parts in releasing position;

Fig. 8 is a view similar to Fig. 5 but with parts broken away to better show the springs;

Figs. 9 and 10 are fragmentary isometric views similar to Fig. 6, but respectively showing two alternative forms of chambers;

Fig. 11 is an isometric view of a key holder construction which has a special utility in combination with the supporting structure of this invention, the key holder being shown closed; and

Fig. 12 is a view of the key holder of Fig. 11 opened for the application or removal of a key.

It will be understood that the drawing is not to scale and the proportionate thickness of some of the parts and the width of the chambers have been somewhat exaggerated in the interest of clearness.

2

Referring to the drawing, a key holder support, generally indicated at 10, constructed according to the invention, is shown in Fig. 1 secured in a case 11 which case may be of any usual or desired form.

In general the key holder support 10 is made up of an aligned series of cells or chambers 12 separated from each other by walls 13 in which chambers the heads 14 of the key holders 15, later more fully described, are individually and releasably confined. The support extends downwardly from the chambers 12 in the form of a plate portion 16 by which the support is riveted or otherwise secured to the case 11 as at 17. The front and ceiling walls of the chambers 12 are formed with slots 18 in which the shanks of the key holders slide as the holders are swung to and from the case. Each chamber is open at the rear as indicated at 19, and the slots 18 open at one end to these rear, or exit, openings 19. The walls 13 completely separate the chambers 12 from each other and segregate the heads 14 of the key holders.

The width of slots 18 is less than the transverse dimension of the heads of the key holders so that the holders are held on the support at all points of movement of the holders in their slots. The dimensions of the exit openings 19 are such as to permit escape of the heads 14 from the chambers but such escape is normally prevented by shiftable means which in one position obstructs the openings 19 of each of the chambers. As shown, the exit obstructing means comprises a cylindrical member 20 extending through the several aligned chambers 12 and journaled in the partition walls 13 and the end walls 21. Intermediate the portions 22 of the cylinder 20 which engage in the bearing openings in the chamber walls, the cylinder is cut away as shown at 23. The diameter of cylindrical member 20 and the depth of cuts 23 are such that when the cylinder is rotated in its bearings to position a substantial or major portion of the diameter of the cylinder across the exit openings 12 as in Figs. 2 to 6, the heads of the key holders cannot pass through the exits but when rotated to a position to present the cuts or a substantial portion thereof across the exits as shown in Fig. 7, the heads may be passed through the exits, as indicated in the latter figure.

The cylindrical retaining member 20 is provided at one end, outwardly of one of the end walls 21 with an operating lever 25. A suitable

spring 26 is provided to normally hold the member 20 in position to prevent escape of the heads through the exits 19. As shown, the outer face of the end wall 21 adjacent the lever 25 is cut away to form a segmental depression 27, providing shoulders 28 and 29 forming stops engaged by the lever 25 at the extremes of the closed and open positions respectively of the cylinder 20.

A spring 26 is anchored at one end in the member 20 as indicated at 30 in Fig. 8, the other end riding in a generally radial undercut groove 31 formed in the end wall 21 between the shoulders 28 and 29. The undercutting of groove 31 in which the spring engages holds the cylinder 20 against axial movement.

In Figs. 2 to 6, the cylindrical member 20 is shown as having bearings only in the walls 12 and 21. If desired the member 20 may be provided with a semi-cylindrical bearing 35 across the floors of the chambers 12 as shown in Fig. 9, thus providing greater resistance against outward thrust of the key holder heads when the member 20 is in position to prevent removal of the key holders. In this arrangement too, the surface of portions 23 will lie substantially flush with the floor of the chambers 12 when the member 20 is rotated to chamber opening position, thus facilitating the removal of the key holders.

In both forms so far described the ceilings of the chambers are thickened slightly adjacent the open ends of the slots 18 as at 36, providing reenforcement at this point and forming arcuate seats as at 37 in which the heads of the key holders tend to seat when the holders are swung outwardly and upwardly from the case for manipulation of the keys in a lock. In both these forms the rear face of the aligned chambers is inclined away from the case 11 to provide a space, indicated at 38 to facilitate passage of the key holder heads in removing them from or inserting them in the chambers 12.

In Fig. 10, another alternative form is shown in which the rear faces of the chamber partitions and end walls extend flush with the rear surface of plate portion 16 as at 40 and 41 respectively. The chambers 12 in the form of Fig. 10, are of more regular shape and incline slightly upwardly from the rear. The key holder heads thus tend to engage the upper rounded end of the chambers when the key holders are swung from the case in use. The locking cylinder 20 and its associated parts may be identical with those previously described. The form shown in Fig. 10 operates otherwise in the same manner as the forms previously described, but the casting dies or molds required in its construction may be somewhat simplified.

The cellular or chambered form of the support is important. The partition walls not only prevent interference of the several key holders with each other but provide reenforcement to the parts adjacent the slots which are under strain during manipulation of the keys on the holders, thus permitting those parts to be relatively thin even when made of thermo or heat setting plastics, or when die cast from light metals or alloys. The partitions also make it possible to provide a plurality of bearing surfaces for the locking member.

While the key supporting structure so far described provides the mentioned advantages when used with any desired or conventional form of headed key holder, further advantageous results are secured when it is used in combination with the novel key holder one embodiment of which is illustrated in the drawing and best shown in

Figs. 11 and 12. In general the improved key holder comprises a head formed of rigid material, preferably in the shape of a cylinder, to which the ends of a length of flexible material 46 are anchored in close proximity to each other to form an elongated loop 47. The flexibility of the material of which the loop is formed is such that the loop can be twisted about its major axis through an angle of at least 180° relative to the head 14, so that when the head is connected to the support 10 a key carried by the loop may be turned and manipulated in a lock. The ends of the length 46 may be anchored to the head by molding or casting the ends thereof into the material of the head or in any suitable manner

A key may be secured to the holder, when the latter is removed from the key case support, by passing the end of the loop through the opening in the key and then passing the head 14 through the extending end of the loop, but preferably the head 14 is divided into two parts, the ends of the length 46 being anchored one to each part so that the key may be threaded on the loop as shown in Fig. 1. As shown in Figs. 11 and 12 the head 14 is divided lengthwise into separable halves or parts 49 and 50. Each half is provided with a dowel 51 which fits into a corresponding hole 52 in the other half when the halves are joined together. The dowels fit sufficiently tightly in their holes so that some degree of force is necessary to separate or assemble the halves.

The length of the cylinder is preferably only slightly less than the distance between the chamber forming partitions 13 of the support 10, the difference being only enough to permit the cylinder to rotate freely when it is placed in one of the chambers. Partitions 13 thus serve as means to keep the shank portion of the loop 47 centered in its slot 18 as it travels therealong when the lead is rotated in swinging the key and loop inwardly and outwardly of the case. Abrasive contact of the shank portion of the loop with the edges of the slot is thereby prevented or minimized.

The loop may be made from any material having sufficient flexibility, strength and wear resistance for the purpose. A cord of braided or twisted "nylon" or similar plastic filament; piano wire or a fine, braided wire; a length of raw-hide; or a cotton or linen cord impregnated with a flexible plastic may be used. The head 14 may be made of the same materials suggested as suitable for the support 10.

The use of the flexible loop key holder permits the keys to adjust themselves more easily in the key case than do the rigid key holders heretofore used and their use reduces the bulk of the key case as a whole. Furthermore, when the key and holder are temporarily detached from the case, for separate use of the key, the decreased bulk and flexibility of the holder has obvious advantages as when the key and its holder are placed in a pocket or purse.

What I claim is:

1. A key supporting device for key cases which comprises, a key holder having an enlarged head and a key carrying loop of flexible material extending therefrom, said loop being sufficiently flexible to permit a key carried thereby to be rotated at least 180° about the major axis of the loop, a support for said key holder in which said head is rotatably mounted, a slot in the support through which said flexible loop extends and along which the shank of the loop may travel when the head is rotated in its support, means

to maintain the shank of the loop substantially centered in the slot, and means for releasing the head from the support.

2. A key supporting device for key cases which comprises, a plurality of key holders each having an enlarged head and a key carrying loop of flexible material extending therefrom, said loops being sufficiently flexible to permit a key carried thereby to be rotated at least 180° about the major axis of the loop, a support in which said heads are individually mounted for independent rotation, a plurality of slots in the support, one adjacent each head, through which the flexible loop of the adjacent head extends and along which the shank of said loop may travel when its head is rotated in the support, means to maintain the shanks of the loops substantially centered in their respective slots and means for releasing the heads from the support.

3. A key supporting device for key cases which comprises, a plurality of key holders each having a substantially cylindrical head and a key carrying loop of flexible material extending therefrom, said loops being sufficiently flexible to permit a key carried thereby to be rotated at least 180° about the major axis of the loop, a support in which said heads are individually mounted for independent rotation, a plurality of slots in the support, one adjacent each head, through which the flexible loop of the adjacent head extends and along which the shank of said loop may travel when its head is rotated in the support, means engaging the ends of the several cylindrical heads to maintain the shanks of the loops substantially centered in their respective slots and means for releasing the cylindrical heads from the support.

4. A key holder for key cases which comprises a head formed of rigid material, and a length of flexible material having its end portions rigidly connected to said head in close parallel proximity to each other to form an elongated loop, the material of which the loop is formed being sufficiently flexible to permit the loop to be twisted about its major axis through an angle of at least 180° relative to the head.

5. A key holder for key cases which comprises a head formed of rigid material, said head being divided into two parts separable from each other, means normally holding said parts in joined relation, and a length of flexible material having its end portions rigidly connected in parallel relation one to each of said parts, the points of anchorage being closely adjacent, when the said parts are in joined relation, to form said length of material into an elongated loop, the material of the loop being sufficiently flexible to permit the loop to be twisted about its major axis through an angle 180° relative to the head.

6. A key holder for key cases which comprises a generally cylindrical head formed of rigid material, said head being divided longitudinally into two parts separable from each other, means normally holding said parts in joined relation, and a length of flexible material having its ends anchored one to each of said parts, the points of anchorage being closely adjacent, when the said parts are in joined relation, to form the said length of material into an elongated loop, the material of the loop being sufficiently flexible to permit the loop to be twisted about its major axis through an angle of 180° relative to the head.

7. A key supporting device for key cases which comprises, a plurality of key holders each having an enlarged head and a key carrying loop of flexible material extending therefrom, said loops being sufficiently flexible to permit a key carried thereby to be rotated at least 180° about the major axis of the loop, a support to which said heads are individually connected for independent movement relative to each other, and means for releasing the heads from the support.

GEORGE R. HAWES.