(12) INTERNATIONAL APPLICATION PUBLISHED UNDER THE PATENT COOPERATION TREATY (PCT)

(19) World Intellectual Property Organization
International Bureau

(43) International Publication Date
11 December 2014 (11.12.2014)

WIPO | PCT

(10) International Publication Number
WO 2014/197118 Al

(51) International Patent Classification:
F16L 37/28 (2006.01) *F16K 1/42* (2006.01)

(21) International Application Number:
PCT/US2014/033392

(22) International Filing Date:
8 April 2014 (08.04.2014)

(25) Filing Language: English

(26) Publication Language: English

(30) Priority Data:
61/832,492 7 June 2013 (07.06.2013) US

(71) Applicant: **PREVCO SUBSEA, LLC** [US/US]; 9521 N. Technology Drive, Suite CI, Fountain Hills, Arizona 85268 (US).

(72) Inventors: **BERTOLDI, John;** 16837 Lunar Lane, Fountain Hills, Arizona 85268 (US). **SCHIMEK, III, Joseph;** 241 Matties Way, Destin, Florida 32541 (US). **HEAD, John;** P.O. Box 20018, Fountain Hills, Arizona 85269 (US).

(74) Agent: **CARROLL, Wayne D.;** 39506 N. Daisy Mountain Dr., Suite 122-501, Phoenix, Arizona 85086 (US).

(81) Designated States *(unless otherwise indicated, for every kind of national protection available):* AE, AG, AL, AM, AO, AT, AU, AZ, BA, BB, BG, BH, BN, BR, BW, BY, BZ, CA, CH, CL, CN, CO, CR, CU, CZ, DE, DK, DM, DO, DZ, EC, EE, EG, ES, FI, GB, GD, GE, GH, GM, GT, HN, HR, HU, ID, IL, IN, IR, IS, JP, KE, KG, KN, KP, KR, KZ, LA, LC, LK, LR, LS, LT, LU, LY, MA, MD, ME, MG, MK, MN, MW, MX, MY, MZ, NA, NG, NI, NO, NZ, OM, PA, PE, PG, PH, PL, PT, QA, RO, RS, RU, RW, SA, SC, SD, SE, SG, SK, SL, SM, ST, SV, SY, TH, TJ, TM, TN, TR, TT, TZ, UA, UG, US, UZ, VC, VN, ZA, ZM, ZW.

(84) Designated States *(unless otherwise indicated, for every kind of regional protection available):* ARIPO (BW, GH, GM, KE, LR, LS, MW, MZ, NA, RW, SD, SL, SZ, TZ, UG, ZM, ZW), Eurasian (AM, AZ, BY, KG, KZ, RU, TJ, TM), European (AL, AT, BE, BG, CH, CY, CZ, DE, DK, EE, ES, FI, FR, GB, GR, HR, HU, IE, IS, IT, LT, LU, LV, MC, MK, MT, NL, NO, PL, PT, RO, RS, SE, SI, SK, SM,

[Continued on nextpage]

(54) Title: HIGH RELIABILITY PRESSURE RELIEF VALVE

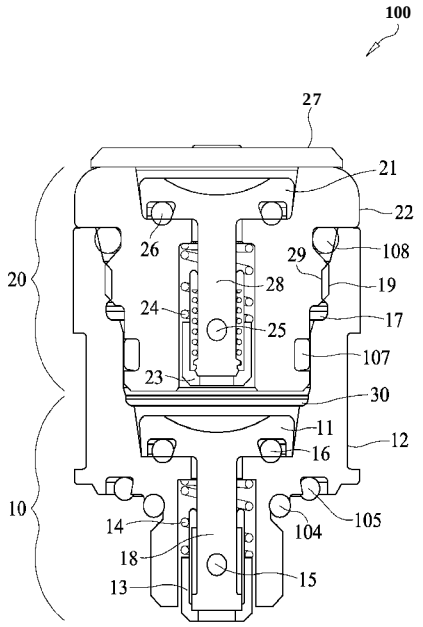

FIG. 4

(57) Abstract: A pressure relief valve is disclosed with a first stage valve that is in series with a second stage valve, with an enclosed cavity between the first stage valve and the second stage valve. The first stage valve relieves pressure from an enclosure into the enclosed cavity between the stages, when the pressure is above a cracking pressure of the first stage valve. The second stage relieves pressure from the enclosed cavity when the pressure is above the cracking pressure of the second stage valve.

WO 2014/197118 A1

TR), OAPI (BF, BJ, CF, CG, CI, CM, GA, GN, GQ, GW, KM, ML, MR, NE, SN, TD, TG).

Published:

— *with international search report (Art. 21(3))*

— *before the expiration of the time limit for amending the claims and to be republished in the event of receipt of amendments (Rule 48.2(h))*

High Reliability Pressure Relief Valve

CROSS REFERENCE TO RELATED APPLICATIONS

This application claims priority to a provisional application Ser. No. 61/832,492 Filed 07-JUNE-201 3 which is a pending application, the disclosure of which is incorporated herein by reference in its entirety including specification, claims, and drawings.

BACKGROUND

1. Technical Field

[00 1] This disclosure relates to pressure relief valves.

2. Background Art

[002] In the subsea industry pressure relief valves with relatively low cracking pressures are often used as a safety device to prevent the buildup of inside pressure within a subsea electronics housing. Subsea housings are hydrostatic pressure vessels designed for external pressure and are typically not capable of withstanding even modest relative internal pressure without failure.

[00 3] Significant Internal pressures can develop as the result of hydraulic leaks, battery off-gassing and or slow sea water leaks that cannot relieve internal pressure quickly enough during recovery to the surface.

[004] Unfortunately pressure relief valves have a reputation for poor reliability in the subsea environment. Corrosion and fouling of the moving parts by suspended particulate matter can sometimes lead to failure by preventing the valve from reseating sufficiently to establish a reliable seal. While the use of redundant

corrosion resistant materials and seals improve reliability of subsea pressure relief valves these enhancements do not address the fundamental problem of the mechanical parts within the valve; each being single point of failure.

BRIEF SUMMARY

[00 5] The embodiments of the pressure relief valves disclosed relate to pressure relief valves for relieving pressure inside a chamber, including a chamber used in the deep sea or other high pressure environments with improved reliability over existing pressure relief valve designs. In an example embodiment, the relief valve includes a first stage with a first valve having a first cracking pressure value, and a second stage with a second valve, having a second cracking pressure value. An enclosed cavity is between the first stage and the second stage, so that the first valve relieves pressure above the first cracking pressure value from an enclosed housing into the enclosed cavity, and the second stage valve relieves pressure above the second cracking pressure value from the enclosed cavity into an outside environment.

[006] The first valve may include a first body and a first poppet, and the second valve may include a second body and a second poppet. The first body may have an opening configured to receive the second body, with the second body occupying at least a portion of the opening. At least one seal may be placed between the first body and the second body. The enclosed cavity may be formed with a sealed space between the first body and second body.

[00 7] The first valve may also include a first threaded stem connected to the first poppet and a first spring configured to keep the first valve in a closed position until the first spring is compressed. A first adjustment nut may be used to adjust the

load on the first spring, with the first adjustment nut positioned on the first threaded stem to set the first cracking pressure value.

[008] The first adjustment nut may be set so that the first cracking pressure value is higher than the second cracking pressure value. Alternatively, the first cracking pressure value may be approximately the same as the second cracking pressure value. In another embodiment, the first adjustment nut may be set so that the first cracking pressure value is lower than the second cracking pressure value.

[009] The first adjustment nut may be set so the first cracking pressure is approximately within a first range. The second valve may include a second spring configured to keep the second valve in a closed position until the second spring is compressed, and a second adjustment nut to adjust the load on the second spring. The second adjustment nut may be set so the second cracking pressure is approximately within a second range.

[00 10] A cap may be placed next to the second valve to prevent particles from entering the second valve. The cap may be attached to the second body in a manner so that the cap will be removed if a high rate of fluid passes through the second valve.

[00 11] A high flow indicator may be attached to the second stage. The high flow indicator may be configured to indicate when a high flow of fluid has passed through the second valve.

[00 12] The first valve may include a first threaded valve stem including a first thread lock device. The first adjustment nut may be placed on the first threaded valve stem so that it is in contact with the first thread lock device to prevent the first adjustment nut from moving due to vibration.

[00 13] In another example embodiment, an enclosed housing may have an exterior and an interior, where the enclosed housing is configured to protect the interior from pressurized fluids on the exterior of the enclosed housing. The enclosed housing may also include a pressure relief port that allows fluid to pass from the interior of the enclosed housing to the exterior of the enclosed housing. The enclosed housing may include a pressure relief valve having a total cracking pressure value. The pressure relief valve may be fixed in the pressure relief port that is configured to allow fluid to pass in one direction from the interior of the enclosed housing to the exterior of the enclosed housing when fluid pressure on the interior of the enclosed housing is greater than the sum of fluid pressure on the exterior of the housing and the total cracking pressure value. The pressure relief valve may include a first stage valve, and a second stage valve, and an enclosed cavity between the first stage valve and the second stage valve.

[00 14] The first stage valve may have a first cracking pressure value, and the second stage valve may have a second cracking pressure value that is lower than the first cracking pressure value. The first stage valve may be configured to allow fluid to pass in one direction from the interior of the housing into the enclosed cavity. The second stage valve may be configured to allow fluid to pass in one direction from the enclosed cavity to the exterior of the housing.

[00 15] The enclosed housing may be configured to withstand fluid pressure, with a maximum fluid pressure up to the design operating pressure.

[00 16] An example method of producing a high reliability pressure relief valve may include the steps of: assembling a first stage with a first pressure relief valve for relieving fluid pressure from an enclosed housing above a first cracking pressure

value; assembling a second stage with a second pressure relief valve to relieve pressure above a second cracking pressure value; and assembling the first stage with the second stage in series, with an enclosed cavity between the first stage and the second stage, where the first stage relieves pressure above the first cracking pressure value from the enclosed housing into the enclosed cavity, and where the second stage relieves pressure above the second cracking pressure value from the enclosed cavity into an outside environment outside the enclosed housing.

[00 17] The first cracking pressure value may be a higher pressure than the second cracking pressure value.

[00 18] The example method may include the steps of: adjusting the first stage to set the first cracking pressure value; and adjusting the second stage to set the second cracking pressure value.

[00 19] As will be made clear, the disclosed embodiments of the pressure relief valve provide important advantages in providing a highly reliable pressure relief system for enclosed housings in a high pressure environment.

BRIEF DESCRIPTION OF THE DRAWINGS

Fig. 1 is a perspective view of an embodiment of pressure relief valve.

Fig. 2 is a cut away view of the first stage of an example pressure relief valve.

Fig. 3 is cut away view of the second stage of an example pressure relief valve.

Fig. 4 is a cut away view of an embodiment of the pressure relief valve with the first stage of Fig. 2 assembled with the second stage of Fig. 3.

Fig. 5 is a cut away view of an example enclosed housing.

Fig. 6 is a flow chart of an example method of making a pressure relief valve.

DETAILED DESCRIPTION

[002 0] In one embodiment of the invention, a pressure relief valve addresses the problem of failure of moving parts by housing two serially redundant pressure relief valves in a single corrosion resistant housing. An example pressure relief valve 100 is shown in Fig. 1, with a first housing 12, and a second housing 22, and a cap 27. The cap 27 prevents dust and particles from interfering with the operation of the pressure relief valve 100. The cap 27 in the example embodiment has an opening that allows fluid exiting the second valve 20 to pass through the cap 27.

[002 1] In one embodiment a high flow indicator may be placed on the outside of the pressure relief valve, so that an inspection from the outside of the pressure relief valve will indicate that a high rate of flow has passed through the valve at some point. In some cases components such as electronics fail and produce a high volume of gas, or a large amount of heat that can increase the pressure inside a housing. Once the gas has exited through the relief valve, there may not be any indication that the component has failed as the relief valve will return to the closed position. For example, once cell in a multi-cell battery may fail, or one component may fail, with the system still operating. An indicator may be placed on the exterior of the pressure relief valve to indicate if high flow has occurred.

[002 2] The cap 27, for example, may serve as an indicator of a problem or failure. When normal amounts of pressure are relieved through the pressure relief valve 100, the example cap 27 will not be moved or affected. In the event that there is a large amount of pressure that is relieved through the pressure relief valve 100, for example if an electronic component inside a housing with the pressure relief valve 100 had a failure that caused a sudden large amount of pressure inside the

housing, then pressure will be released quickly and the cap 27 may be moved, or even removed by the action of the valve opening further than in normal operation, or by the action of the fluid passing quickly through the cap 27. In this way, inspection of the outside of the housing, by looking to see if the cap 27 has been moved or removed, may indicate whether there has been a failure of components inside the housing.

[002 3] Fig. 2 is a cut away view through the center of the example pressure relief valve 100 of Fig. 1, showing a portion of the valve contained in the first housing 12. In this example embodiment, the first housing 12 includes a first stage valve 10, and an opening 17 with a threaded joint 19. The first stage valve 10 in this embodiment includes a spring loaded valve with a first poppet 11 that includes a first valve seal 16. The example first poppet 11 is connected to a first threaded stem 18, and first adjustment nut 13, attached to the first threaded stem 18. The first threaded nut 13, in this embodiment is used to adjust the load on a first spring 14. The example first stage valve 10 will have a cracking pressure that depends on the load on the first spring 14.

[002 4] To maintain a consistent cracking pressure, the first adjustable nut 13 needs to stay in the position where it is placed after it is adjusted. A first thread lock device 15 is shown. By way of example, the first thread lock device 15 may be a nylon plug that is placed within a hole in the first threaded stem 18. The nylon plug will contact the threads of the first adjustment nut 13 and cause a resistance to movement of the first adjustment nut 13. In this way the adjustment to the first cracking pressure is likely to remain in the same place, even if the pressure relief valve is used in an environment with high levels of vibration or shock.

[0025] Fig. 2 also shows in dotted lines a portion of an example housing 40 with a pressure relief port 41. The example embodiment in Fig. 2 shows the first body 12 of the pressure relief valve inserted into the pressure relief port 41 of the enclosed housing 40. Two seals 104 and 105 are shown which seal the pressure relief port 41 from the outside environment.

[0026] Fig. 3 shows an example second stage 20 of the pressure relief valve of Fig. 1. The example second stage valve 20 includes a second poppet 21, connected to a second threaded stem 28. In this example embodiment, the second stage 20 is similar to the first stage 10 shown in Fig. 2, with the same operation of a second adjustment nut 23, and a second spring 24. A second valve seal 26 is also part of the example valve shown in Fig. 3, and prevents exterior fluid from entering the valve. The example second stage valve 20 also includes a second thread lock device 25, which may be a nylon plug and operate in the same manner as the first thread lock device 15.

[0027] The second body 22 of the example second stage valve 20 is designed to be inserted into the opening 17 of the first body 12 shown in Fig. 2. To ensure a proper seal to the exterior environment, multiple redundant seals, 107 and 108 are used in this example. The example second body 22 also includes threads 29 to connect with the threaded joint 19 of the first body 12.

[0028] Fig. 4 shows an example arrangement with the first body 12 of Fig. 2 assembled with the second body 22 of Fig. 3 to form a valve with two separate valve assemblies; a first stage valve 10 and a second stage valve 20. In the example embodiment, these assemblies are screwed together at the threaded joint 19. This joint is sealed by at least two and in this case three redundant o-rings 107 and 108 which

seal the interior cavity between the first and second stage valves as well as protect the threaded joint from the high pressure environment, such as sea water. In this example, each valve consists of a body 12 and 22, a poppet 11 and 21 (with locking feature 15 and 25), a spring 14 and 24 and an adjustable nut 13 and 23. All parts in the foregoing example which are exposed to sea water may be Titanium, coated to reduce galvanic corrosion.

[0029] With the first stage 10 and second stage 20 combined in the example of Fig. 4, an enclosed cavity 30 is formed between the first valve and the second valve. This allows fluid with a differential pressure above the cracking pressure of the first valve 10 to pass through the first valve 10 into the enclosed cavity 30. When fluid, moves through the first valve 10 into the cavity 30, this will increase the pressure of fluid inside the enclosed cavity 30, and then cause the pressure inside the enclosed cavity 30 to exceed the cracking pressure of the second valve 20. Fluid will then flow through the second valve 20 and into the high pressure environment, or the environment outside the valve 100.

[0030] Fig. 5 shows an example enclosed housing 40 with a pressure relief port 41. A pressure relief valve 100 is shown with a first valve 10, a second valve 20 and an enclosed cavity 30 between the first valve 10 and the second valve 20. The pressure relief valve is also shown with a high flow indicator cap 27, that indicates when a high flow has occurred through the pressure relief valve 100. In this example the high flow indicator cap 27 moves or comes off when a high flow of fluid passes through the valve. The enclosed housing 40 has an exterior 42 and an interior 43. Equipment such as electronic sensors and batteries may be place inside the enclosed housing 40. The enclosed housing 40 may be placed in a high pressure environment, such as a deep

sea environment. As the enclosed housing 40 is placed into the high pressure environment, outside pressure 220 acts on the exterior of the housing. Inside pressure 210 is likely to be lower than the outside pressure 220 in this environment. The inside pressure may increase, however, due to an imperfect seal, or operation of the equipment inside the enclosed housing 40. When the enclosed housing is removed from the high pressure environment, the inside pressure 210 may exceed the outside pressure 220. A high inside pressure, relative to the outside pressure 220 may cause failure of the enclosed housing 40, or may present a safety hazard when the enclosed housing is opened to service the electronics or replace batteries. Each housing or device will have a range of acceptable pressures for both outside the housing or device, and inside the housing or device, which will be the design operating pressure.

[0031] To prevent the safety hazard or failure of the enclosed housing 40, a pressure relief valve 100 can be used to relieve inside pressure 210 well before the failure of the enclosed housing 40 is likely to occur. Example housings are designed to withstand outside pressures 220 in a high pressure environment, up to the design operating pressure of the housing.

[0032] In an example embodiment, the pressure relief valve 100 has a design operating pressure 220 of 8780 PSI outside pressure (or 6000 meter depth in the ocean) and relieve any inside pressure differential greater than 15 PSI. The cracking pressure (15 PSI max) is the sum of the first and second stage cracking pressures. The cracking pressure of each valve may be factory set by adjusting the respective adjustment nuts 13 and 23. Both of these nuts are locked to their respective poppets by a nylon upset nylon rod 15 and 25. This feature protects the factory setting from the effects of shock and vibration. The poppets may be tapered as illustrated in

the example drawings, so as to provide an increasing cross-section for gas flow as they continue to open. The tapered poppets decrease the pressure drop across the valves and improve flow rate capability.

[00 3 3] An example high reliability pressure relief valve is installed onto a subsea housing into a modified SAE J 1926 port with a through hole into the interior cavity of the subsea housing. This connection is redundantly sealed by o-rings 104 and 105. In service, if the inside pressure differential between 2 1 0 and 30 builds up and exceeds the cracking pressure of the first stage valve 10 the force developed from the pressure differential across the poppet exceeds the preset spring force which normally holds the poppet closed and sealed via seal 16. This causes the first stage poppet 11 to open and gas to pass through into the inter-valve cavity 30, pressurizing it as well. If the inside pressure 2 1 0 continues to increase or the outside pressure 220 decreases due to changing depth, and the pressure differential across the second stage valve 20 is exceeded in the same manner as the first stage it will open (seal 26) and begin venting interior gas out into the exterior environment 220. The combined cracking pressure of the system is the sum of the cracking pressures of the two individual valves as they are functionally arrange in series.

[00 3 4] As inside pressure 2 1 0 is relieved, the pressure differential across the second stage 20 will fall below its cracking pressure allowing the second stage spring 24 to close the valve. As long as the inside pressure 2 1 0 is not still increasing, the first stage valve pressure differential will then drop to a point where it will also close.

[00 3 5] A failure of either valve to seat properly will not result in a housing failure (leaking) as both must be open to allow water to pass into the inner housing chamber.

[00 3 6] Fig. 6 shows an example method of producing a high reliability pressure relief valve 60. A first stage valve may be assembled 61, and independently a second stage valve may be assembled 63. The first stage valve may be adjusted 62 and the second stage valve may be adjusted 64. As shown in the flow diagram of Fig. 6, the first stage and second stage may be assembled independently and at separate times. The first stage and second stage can then be assembled together 65.

[00 3 7] The first stage valve may have a cracking pressure that is higher than, the same as, or lower than the cracking pressure of the second stage.

[00 3 8] In the embodiments shown and discussed, particular configurations are shown by way of example, and other configurations and devices may be used within the disclosed novel inventive concepts. For example, the shape and configuration of the first body 12 and the second body 22 are shown by way of example. In alternative embodiments, the first body and the second body may be formed together rather than as two separate parts. Similarly, the type and configuration of the valve mechanisms may be any valve mechanism that allows a set cracking pressure and is capable of allowing fluid to flow in one direction, and withstand outside pressure. The drawings also show multiple redundant seals by way of example and not limitation. The invention may be practiced with any number of redundant seals sufficient to prevent fluid from passing from the exterior of the housing 42 into the interior of the housing 43.

[00 3 9] In the example embodiments, springs are discussed and illustrated as coil springs, such as metal corrosion resistant material springs. Other

springs may be used to provide force to keep the valve closed below the desired cracking pressure. A spring is any elastic object used to store mechanical energy.

[0040] The valve and housing discussed above may be used in a high pressure environment, such as in a deep sea environment. The fluid inside the housing may be air, or alternatively, it may be other fluids. The fluid outside the housing may be water, for example seawater, or it may be air or other fluids.

[004 1] The example configuration shown in Figs. 2-4 shows an adjustment nut for adjusting the cracking pressure of the valves. In other embodiments other means may be used to set a cracking pressure, which may be adjustable, or alternatively may be set without adjustment. Further, one or both of the valves may have an adjustment available for the cracking pressure.

[0042] The examples discussed above have described relieving pressure from inside a housing as an example application of the pressure relief valve. This is not by way of limitation as the pressure relief valve 100 may be used in any environment where fluids are to be controlled and allowed to flow in only one direction based on pressure differentials. The valve disclosed may allow fluid into a normally high pressure system when the pressure drops below a set value, such as in a water or gas supply system, and may be used for other applications other than those where pressure is relieved. In this manner an outside, external or exterior environment is describing the environment where fluid flows after the fluid passes through the second stage of the valve, and an inside, internal, or interior environment is describing the environment from which fluid will flow into the valve when the pressure differential allows the valve to open.

[004 3] While the principles of the invention have been made clear in illustrative embodiments, there will be immediately obvious to those skilled in the art many modifications of structure, arrangement, proportions, and methods, the elements, materials, and components used in the practice of the invention, and otherwise, which are particularly adapted to specific environments and operative requirements without departing from those principles. The appended claims are intended to cover and embrace any and all such modifications, within the limits only of the true spirit and scope of the invention.

CLAIMS

What is claimed is:

1. A device comprising:

a first stage with a first valve having a first cracking pressure value;

a second stage with a second valve, having a second cracking pressure value; and

an enclosed cavity between the first stage and the second stage;

wherein the first valve is designed to relieve pressure above the first cracking pressure value from an enclosed housing into the enclosed cavity, and

wherein the second stage valve is designed to relieve pressure above the second cracking pressure value from the enclosed cavity into an outside environment.

2. The device according to claim 1, wherein the first valve includes a first body and a first poppet, and wherein the second valve includes a second body and a second poppet.

3. The device according to claim 2 wherein the first body has an opening configured to receive the second body, with the second body occupying at least a portion of the opening.

4. The device according to claim 3 wherein at least two seals are placed between the first body and the second body, and wherein there is a space between the first body and second body that forms the enclosed cavity.

5. The device according to claim 2, wherein the first valve includes a first threaded stem connected to the first poppet and a first spring configured to keep the first valve in a closed position until the first spring is compressed, and a first adjustment nut to adjust the load on the first spring, and wherein the first adjustment nut is positioned on the first threaded stem to set the first cracking pressure value.

6. The device according to claim 1 wherein the first valve includes a first spring configured to keep the first valve in a closed position until the first spring is compressed, and a first adjustment nut to adjust the load on the first spring, and wherein the first adjustment nut is set so that the first cracking pressure value is higher than the second cracking pressure value.

7. The device according to claim 1 further comprising a cap placed next to the second valve to prevent particles from entering the second valve.

8. The device according to claim 2 further comprising a cap placed next to the second valve to prevent particles from entering the second valve, wherein the cap is attached to the second body in a manner so that the cap will be removed if a high rate of fluid passes through the second valve.

9. The device according to claim 1 wherein the first valve includes a first spring configured to keep the first valve in a closed position until the first spring is compressed, and a first adjustment nut to adjust the load on the first spring, and wherein the first adjustment nut is set so the first cracking pressure is approximately within a first range,

and wherein the second valve includes a second spring configured to keep the second valve in a closed position until the second spring is compressed, and a second adjustment nut to adjust the load on the second spring, and wherein the second adjustment nut is set so the second cracking pressure is approximately within a second range.

10. The device according to claim 9 wherein the first valve includes a first threaded valve stem, and wherein the first threaded valve stem includes a first thread lock device, and wherein the first adjustment nut is placed on the first threaded valve stem so that it is in contact with the first thread lock device to prevent the first adjustment nut from moving due to vibration.

11. The device according to claim 1 further comprising a high flow indicator attached to the second stage, wherein the high flow indicator is configured to indicate when a high flow of fluid has passed through the second valve.

12. A device comprising:

An enclosed housing with an exterior and an interior, wherein the enclosed housing is configured to protect the interior from pressurized fluids on the exterior of the enclosed housing,

a pressure relief port that allows fluid to pass from the interior of the enclosed housing to the exterior of the enclosed housing,

a pressure relief valve having a total cracking pressure value, wherein the pressure relief valve is fixed in the pressure relief port that is configured to allow fluid to

pass in one direction from the interior of the enclosed housing to the exterior of the enclosed housing when fluid pressure on the interior of the enclosed housing is greater than the sum of fluid pressure on the exterior of the housing and the total cracking pressure value;

wherein the pressure relief valve includes a first stage valve, and a second stage valve, and an enclosed cavity between the first stage valve and the second stage valve.

13. The device according to claim 12, wherein the first stage valve has a first cracking pressure value, and the second stage valve has a second cracking pressure value that is lower than the first cracking pressure value.

14. The device according to claim 12 wherein the first stage valve is configured to allow fluid to pass in one direction from the interior of the housing into the enclosed cavity, and wherein the second stage valve is configured to allow fluid to pass in one direction from the enclosed cavity to the exterior of the housing.

15. The device according to claim 12, wherein the enclosed housing is configured to withstand fluid pressure up to a design operating pressure.

16. The device according to claim 12, further comprising a high flow indicator attached to the second stage valve, wherein the high flow indicator is configured to indicate when a high flow of fluid has passed through the second stage valve.

17. A method of producing a high reliability pressure relief valve comprising the steps of:

assembling a first stage with a first pressure relief valve for relieving fluid pressure from an enclosed housing above a first cracking pressure value;

assembling a second stage with a second pressure relief valve to relieve pressure above a second cracking pressure value;

assembling the first stage with the second stage in series, with an enclosed cavity between the first stage and the second stage, where the first stage relieves pressure above the first cracking pressure value from the enclosed housing into the enclosed cavity, and where the second stage relieves pressure above the second cracking pressure value from the enclosed cavity into an outside environment outside the enclosed housing.

18. The method according to claim 17, wherein the first cracking pressure value is a higher pressure than the second cracking pressure value.

19. The method according to claim 17, further comprising the step of: adjusting the first stage to set the first cracking pressure value.

20. The method to claim 19 further comprising the step of: adjusting the second stage to set the second cracking pressure value.

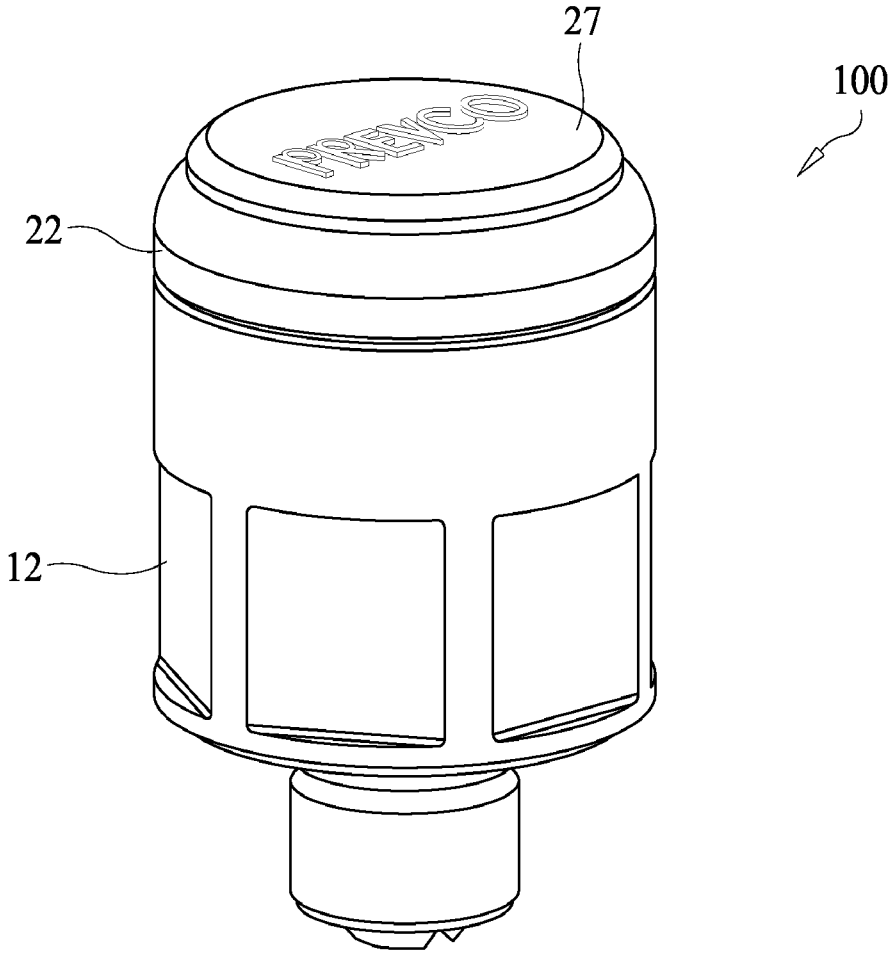

FIG. 1

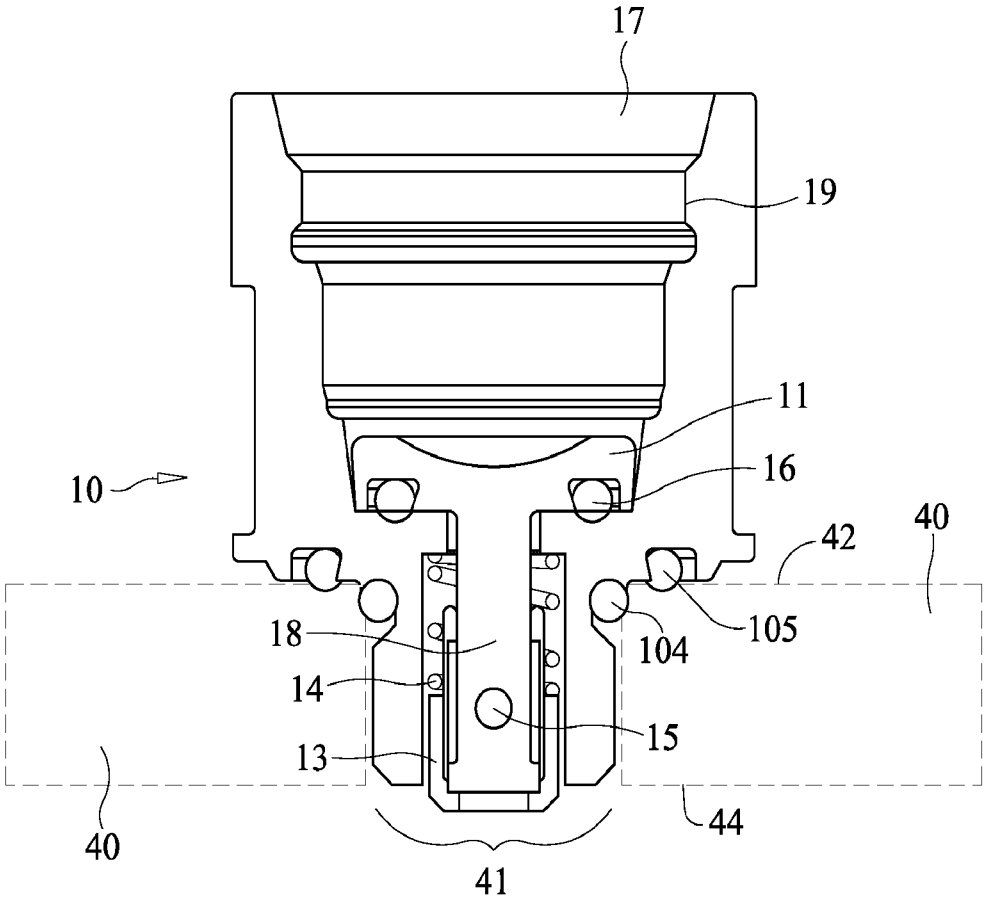
17
19
11
16
10
42
40
18
104
105
14
15
13
40
44
41

FIG. 2

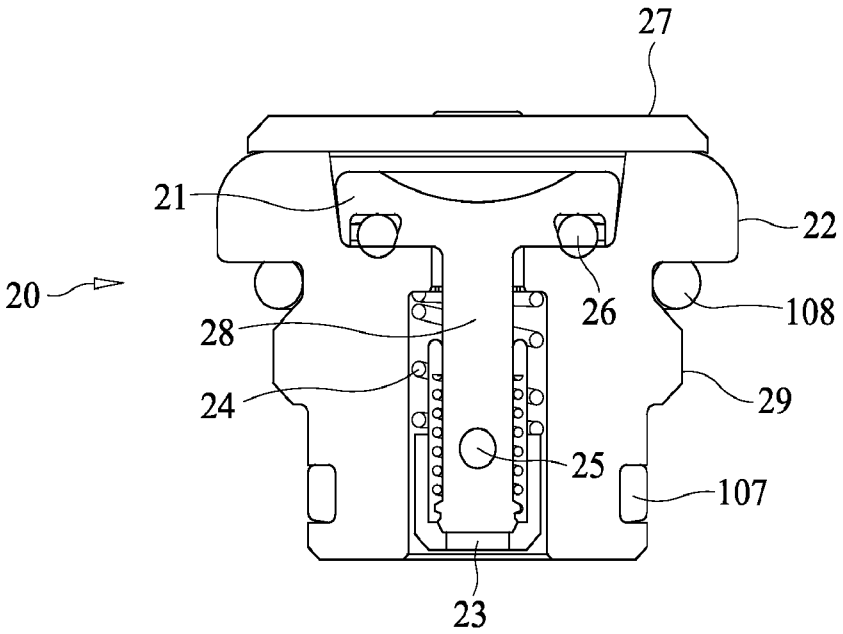
27
21
22
20
26
108
28
24
29
25
107
23

FIG. 3

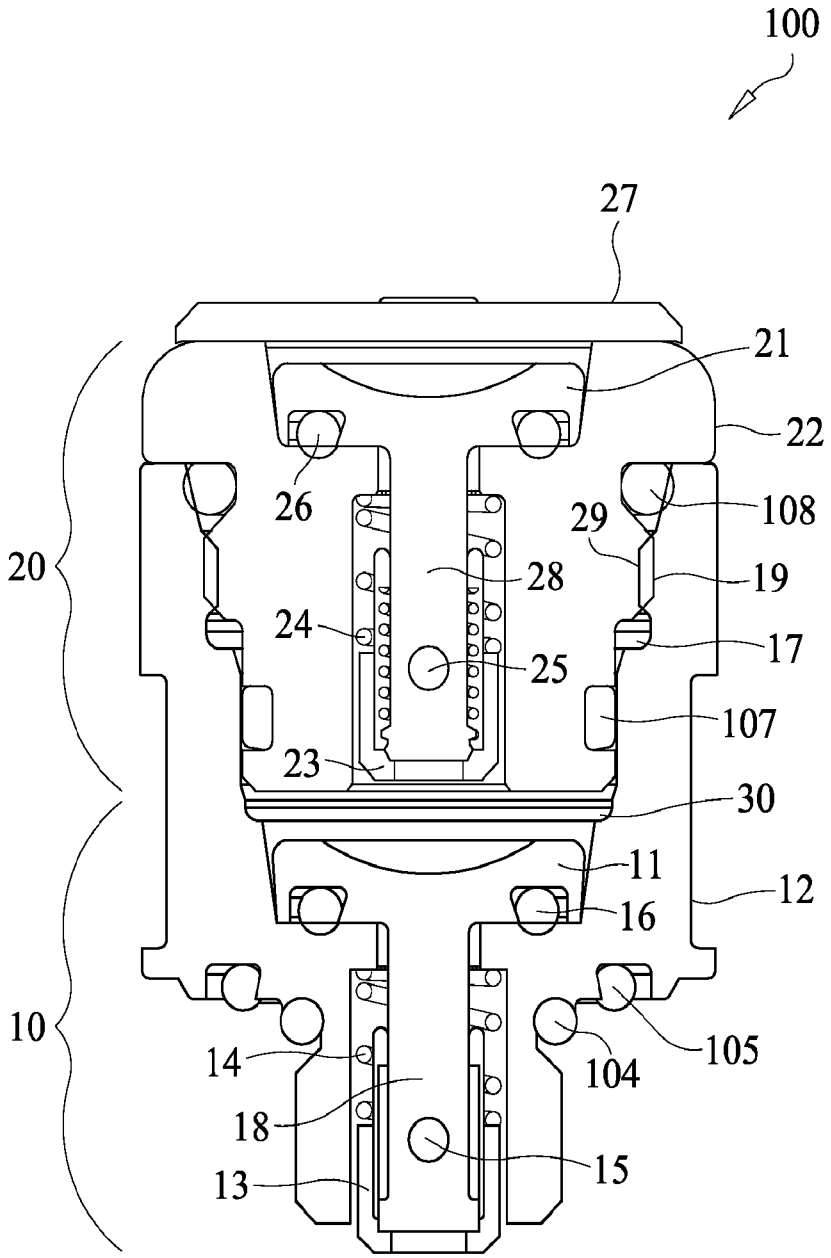
100
27
21
22
26
108
29
20
28
19
24
17
25
107
23
30
11
12
16
10
105
14
104
18
15
13

FIG. 4

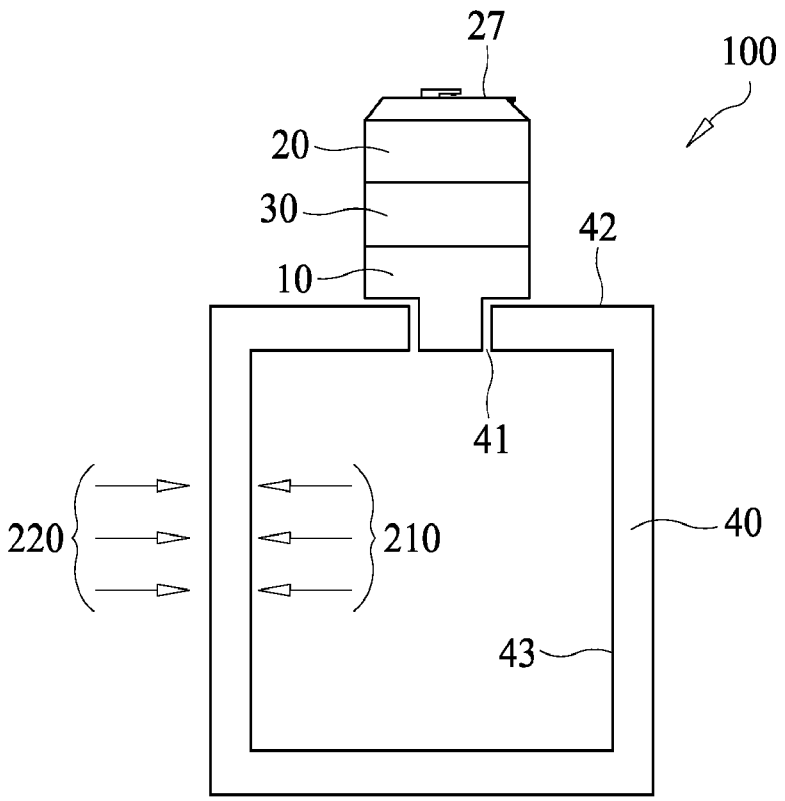

FIG. 5

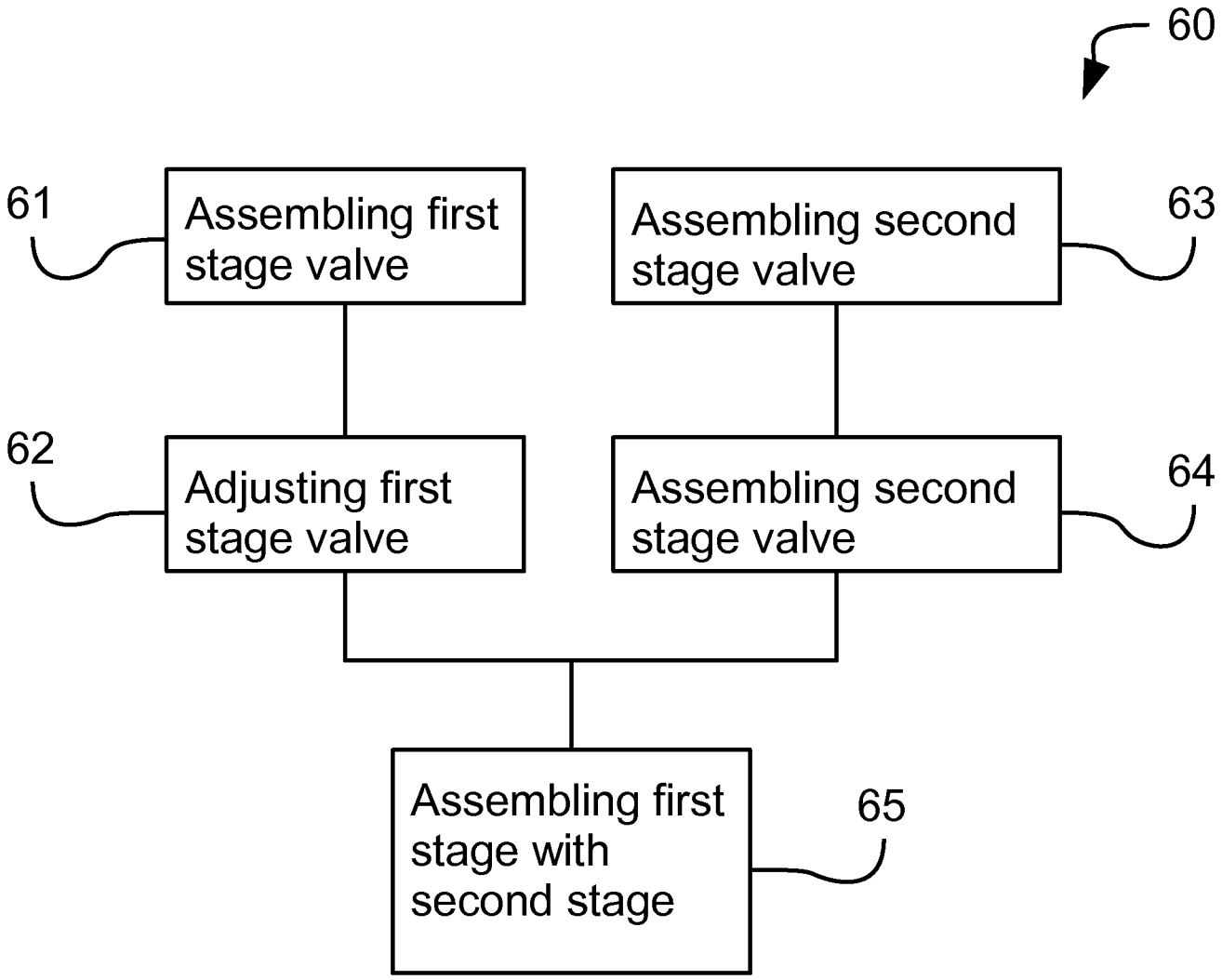
60
61
Assembling first stage valve
Assembling second stage valve
63
62
Adjusting first stage valve
Assembling second stage valve
64
Assembling first stage with second stage
65

FIG. 6

INTERNATIONAL SEARCH REPORT

International application No.
PCT/US 14/33392

A. CLASSIFICATION OF SUBJECT MATTER

IPC(8) - F16L 37/28; F16K 1/42 (2014.01)
USPC - 251/149.9, 359, 900

According to International Patent Classification (IPC) or to both national classification and IPC

B. FIELDS SEARCHED

Minimum documentation searched (classification system followed by classification symbols)

IPC(8) Classification(s): F16L 37/28; F16K 1/42 (2014.01)
USPC Classification(s): 251/149.9, 359, 900; CPC Classification(s): F16L 37/23; F16K 1/42; 11/0712

Documentation searched other than minimum documentation to the extent that such documents are included in the fields searched

Electronic data base consulted during the international search (name of data base and, where practicable, search terms used)

MicroPatent (US-G, US-A, EP-A, EP-B, WO, JP-bib, DE-C.B, DE-A, DE-T, DE-U, GB-A, FR-A); IP.com; Google/Google Scholar; DialogPRO; Searched Terms Used: pressure, valve, relief, spring, o-ring, seal, washer, nut, adjust, cap, subsea, sea, ocean, bottom, upper, stage, poppet, mushroom, cracking, thread, stem, hydrostatic, compress, head

C. DOCUMENTS CONSIDERED TO BE RELEVANT

Category*	Citation of document, with indication, where appropriate, of the relevant passages	Relevant to claim No.
X	US 2,420,370 A (HAMILTON) May 13, 1947; main figure; column 3, lines 30-40, 60-70	1, 2, 5-7, 9, 12-15, 17-20
---		---
Y		11, 16
Y	US 5,664,601 A (CHEN) September 9, 1997; figure 1; column 2, lines 20-30	11, 16
A	US 4,953,588 A (SANDS) September 4, 1990; figure 2; column 3; lines 20^*0	1-20
A	US 2010/0043901 A1 (RICHARDSON JS et al.) February 25, 2010; figure 1; paragrpah [0019]	1-20
A	US 6,993,904 B2 (HAZZARD FR et al.) February 7, 2006; figure 2; column 3, lines 50-65	1-20
A	US 5,950,653 A (FOLSOM WD) September 14, 1999; figure 1; column 3, lines 20-40	1-20
A	US 4,392,507 A (HARRIS RS) July 12, 1983; entire document	1-20

☒ Further documents are listed in the continuation of Box C. ☐

* Special categories of cited documents:

"A" document defining the general state of the art which is not considered to be of particular relevance

"E" earlier application or patent but published on or after the international filing date

"L" document which may throw doubts on priority claim(s) or which is cited to establish the publication date of another citation or other special reason (as specified)

"O" document referring to an oral disclosure, use, exhibition or other means

"P" document published prior to the international filing date but later than the priority date claimed

"T" later document published after the international filing date orpriority date and not in conflict with the application but cited to understand the principle or theory underlying the invention

"X" document of particular relevance; the claimed invention cannot be considered novel or cannot be considered to involve an inventive step when the document is taken alone

"Y" document of particular relevance; the claimed invention cannot be considered to involve an inventive step when the document is combined with one or more other such documents, such combination being obvious to a person skilled in the art

"&" document member of the same patent family

Date of the actual completion of the international search	Date of mailing of the international search report
16 October 2014 (16.10.2014)	07 NOV 2014
Name and mailing address of the ISA/US	**Authorized officer:**
Mail Stop PCT, Attn: ISA/US, Commissioner for Patents P.O. Box 1450, Alexandria, Virginia 22313-1450 Facsimile No. 571-273-3201	Shane Thomas PCT Helpdesk: 571-272-4300 PCT OSP: 571-272-7774

INTERNATIONAL SEARCH REPORT

International application No.
PCT/US 14/33392

Box No. 1I Observations where certain claims were found unsearchable (Continuation of item 2 of first sheet)

This international search report has not been established in respect of certain claims under Article 17(2)(a) for the following reasons:

1. ☐ Claims Nos.:
because they relate to subject matter not required to be searched by this Authority, namely:

2. ☐ Claims Nos.:
because they relate to parts of the international application that do not comply with the prescribed requirements to such an extent that no meaningful international search can be carried out, specifically:

3. -D Claims Nos.:
because they are dependent claims and are not drafted in accordance with the second and third sentences of Rule 6.4(a).

Box No. Ill Observations where unity of invention is lacking (Continuation of item 3 of first sheet)

This International Searching Authority found multiple inventions in this international application, as follows:
-*"-Please See Supplemental Page-*" -

1. ☒ As all required additional search fees were timely paid by the applicant, this international search report covers all searchable claims.

2. ☐ As all searchable claims could be searched without effort justifying additional fees, this Authority did not invite payment of additional fees.

3. ☐ As only some of the required additional search fees were timely paid by the applicant, this international search report covers only those claims for which fees were paid, specifically claims Nos.:

4. ☐ No required additional search fees were timely paid by the applicant. .Consequently, this international search report is restricted to the invention first mentioned in the claims; it is covered by claims Nos.:

Remark on Protest

☐ The additional search fees were accompanied by the applicant's protest and, where applicable, the payment of a protest fee.

☐ The additional search fees were accompanied by the applicant's protest but the applicable protest fee was not paid within the time limit specified in the invitation.

☐ No protest accompanied the payment of additional search fees.

-'"-Continued from Box No. Ill: Observations where unity of invention is lacking-**-

This application contains the following inventions or groups of inventions which are not so linked as to form a single general inventive concept under PCT Rule 13.1. In order for all inventions to be examined, the appropriate additional examination fees must be paid.

Group I: claims 1-1 1, 17-20 are directed toward a device that operates with a first cracking pressure value and a second cracking pressure value.

Group II: claims 12-16 are directed toward a device with a pressure relief port.

The inventions listed as Groups I-ll do not relate to a single general inventive concept under PCT Rule 13.1 because, under PCT Rule 13.2, they lack the same or corresponding special technical features for the following reasons.

The special technical features of Group I include a first valve having a first cracking pressure value; a second valve, having a second cracking pressure value; wherein the first valve is designed to relieve pressure above the first cracking pressure value from an enclosed housing into the enclosed cavity, and wherein the second stage valve is designed to relieve pressure above the second cracking pressure value from the enclosed cavity into an outside environment (which is not present in Group II).

The special technical features of Group II include wherein the enclosed housing is configured to protect the interior from pressurized fluids on the exterior of the enclosed housing, a pressure relief port that allows fluid to pass from the interior of the enclosed housing to the exterior of the enclosed housing, a pressure relief valve having a total cracking pressure value, wherein the pressure relief valve is fixed in the pressure relief port that is configured to allow fluid to pass in one direction from the interior of the enclosed housing to the exterior of the enclosed housing when fluid pressure on the interior of the enclosed housing is greater than the sum of fiuid pressure on the exterior of the housing and the total cracking pressure value (which is not present in Group I).

The common technical features of Groups I-ll include a first stage with a first valve; a second stage with a second valve, and an enclosed cavity between the first stage and the second stage.

These common technical features are disclosed by US 4,392,507 A (HARRIS): a first stage with a first valve (ball 20 closing against seat 12; figure 1); a second stage with a second valve (ball 22 closing against seat 14); and an enclosed cavity between the first stage and the second stage (housing 10 is shown with a fuel passageway (enclosed cavity) where spring 24 is disposed between balls 20, 22; figure 1).

Because the common technical features are disclosed by Harris, the inventions are not so linked as to form a single general inventive concept. Therefore, Groups I-ll lack unity.