United States Patent [19]

Vaughan

[11] **3,771,274**

[45] **Nov. 13, 1973**

[54] **EXPANDABLE RETRACTABLE STRUCTURE**

[75] Inventor: **Desmond H. Vaughan,** San Diego, Calif.

[73] Assignee: **General Dynamics Corporation,** San Diego, Calif.

[22] Filed: **May 30, 1972**

[21] Appl. No.: **257,904**

[52] **U.S. Cl.** **52/646**
[51] **Int. Cl.** **E04h 12/18**
[58] **Field of Search** ..... 52/108, 109, 645, 52/646, 81, 80, 648, 632; 135/3 C, 4 C, 4 R

[56] **References Cited**

UNITED STATES PATENTS

3,530,469	9/1970	Dailey	343/915
3,486,279	12/1969	Webb	52/646

Primary Examiner—John E. Murtagh
Attorney—John R. Duncan et al.

[57] **ABSTRACT**

An expandable-retractable structure which in its simplest form comprises: a first set of three rigid links connected together by a first primary pivot at one end, a second set of three rigid links connected together by a second primary pivot at one end and pivotally joined to the first set of links by means of three secondary pivots each connecting corresponding links of said two sets, and a set of three bracing cables connecting the three secondary pivots to complete a double tetragonal structure. The structure is usable as a single module or in combination with a plurality of similar modules which, when combined with connecting cables, may form flat, tapered, or curved structures such as bridges, towers, outriggers, and scaffolds. An actuation system is provided comprising an extension cable connecting the primary pivots which when subjected to tension urges said first and second primary pivots toward one another, subjecting the bracing cables to tension and thereby stabilizing the structure, and a retraction means comprising cables connecting the three secondary pivots which when subjected to tension urge the secondary pivots toward one another and the primary pivots away from one another to return the structure to its original retracted form.

9 Claims, 17 Drawing Figures

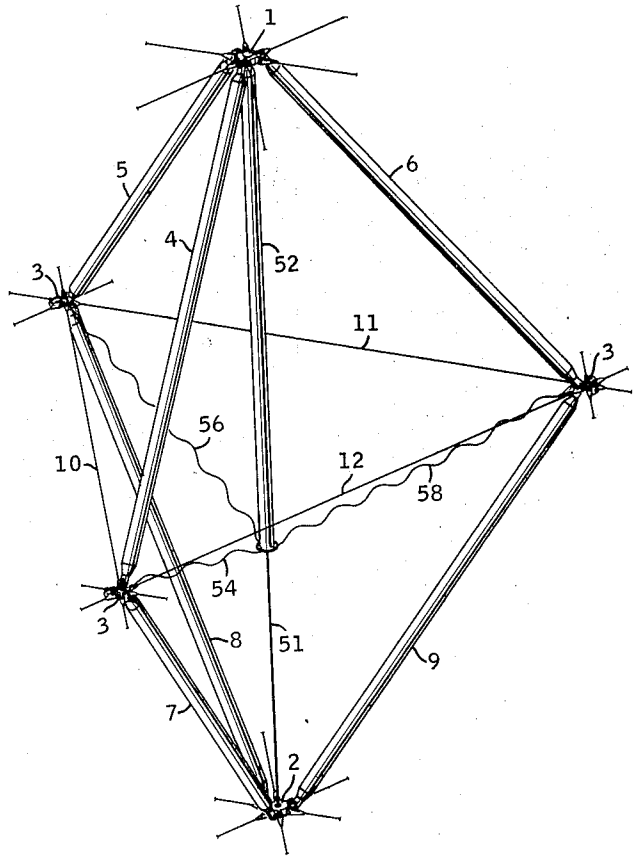

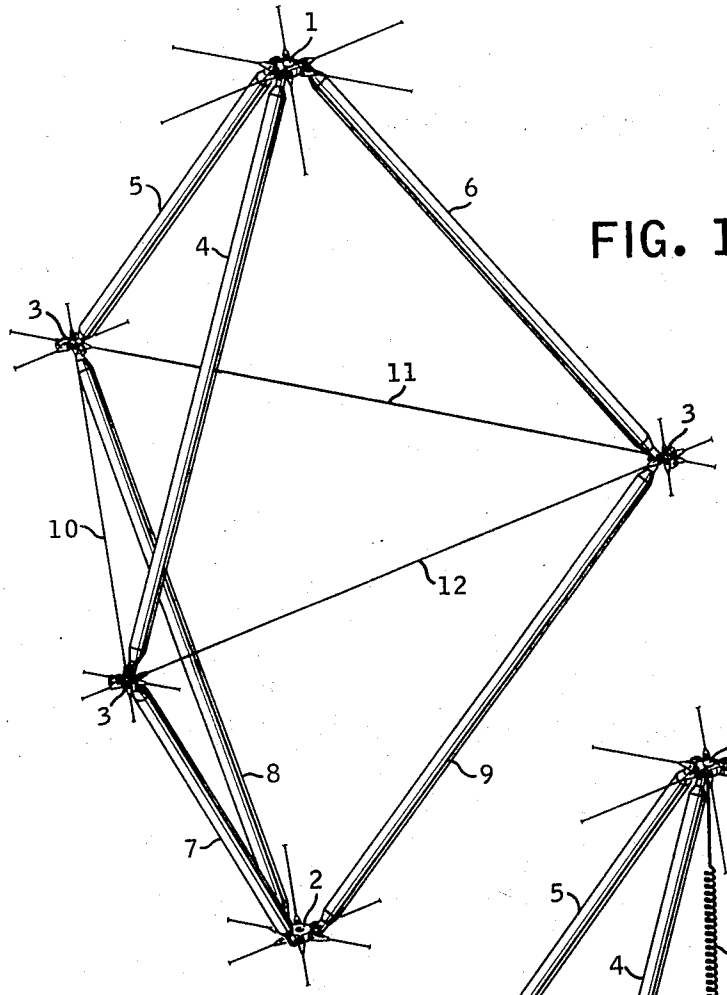

FIG. 1

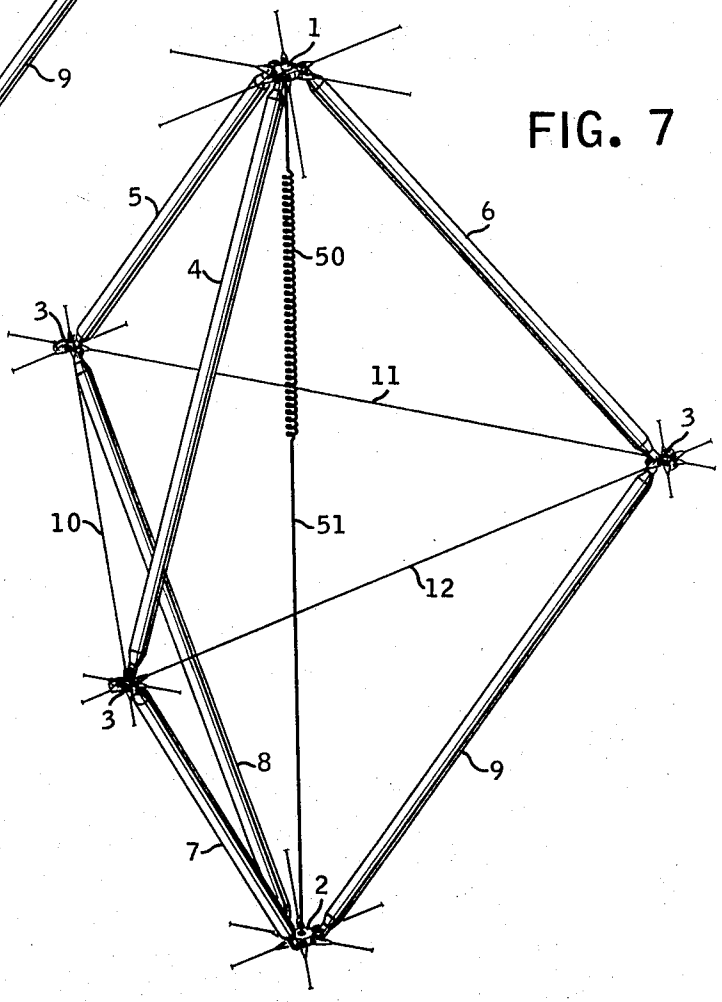

FIG. 7

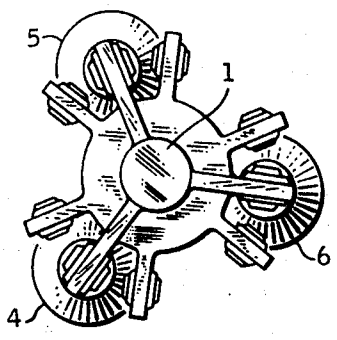

FIG. 2

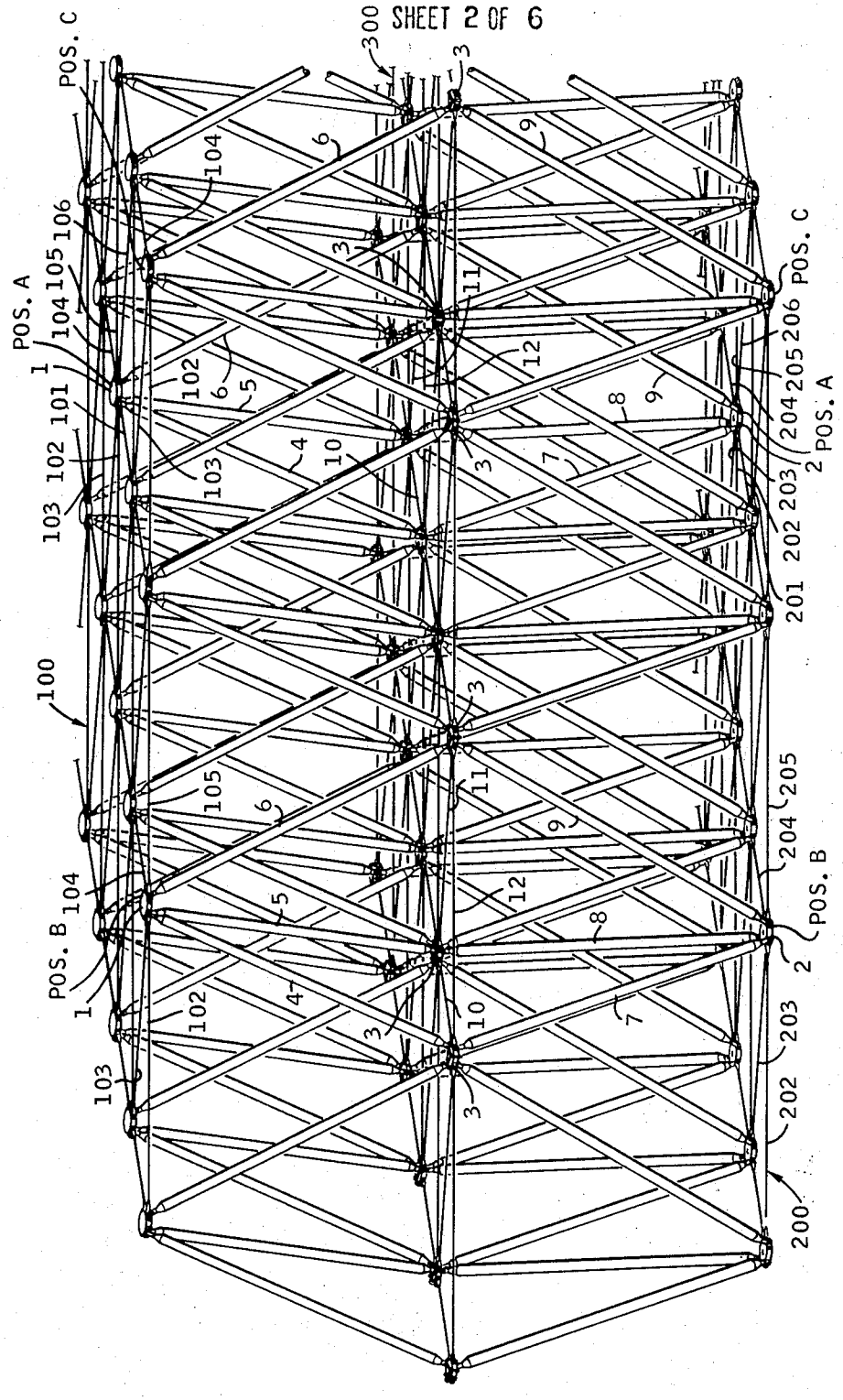
300
POS. C
POS. A
POS. B
100
200
201
202
203
204
205
206
101
102
103
104
105
106
1
2
3
4
5
6
7
8
9
10
11
12

FIG. 3

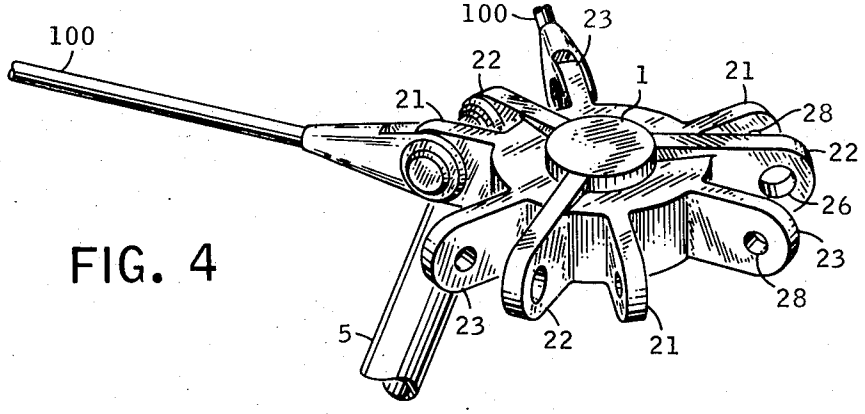

FIG. 4

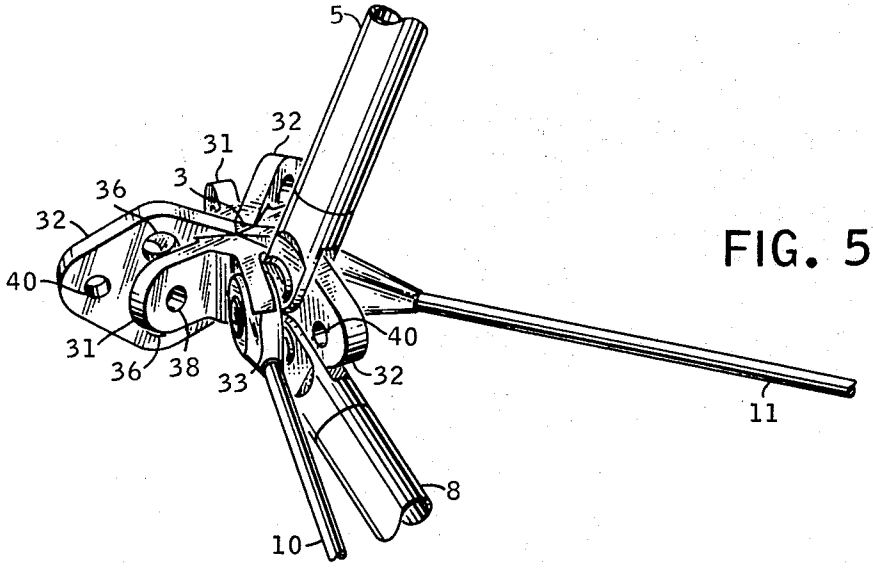

FIG. 5

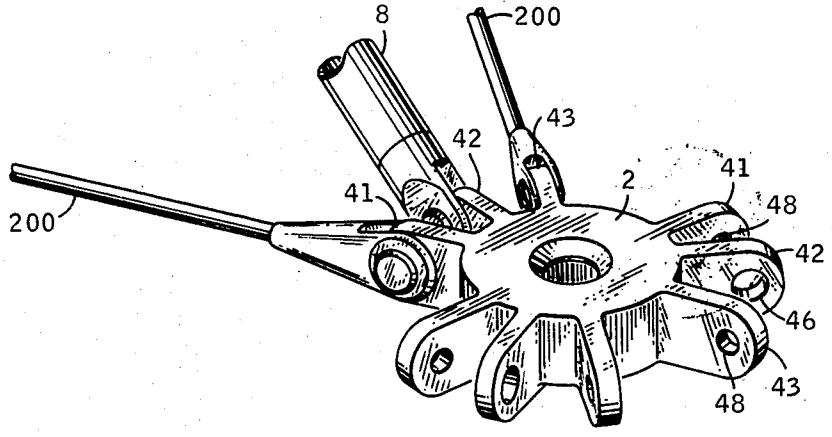

FIG. 6

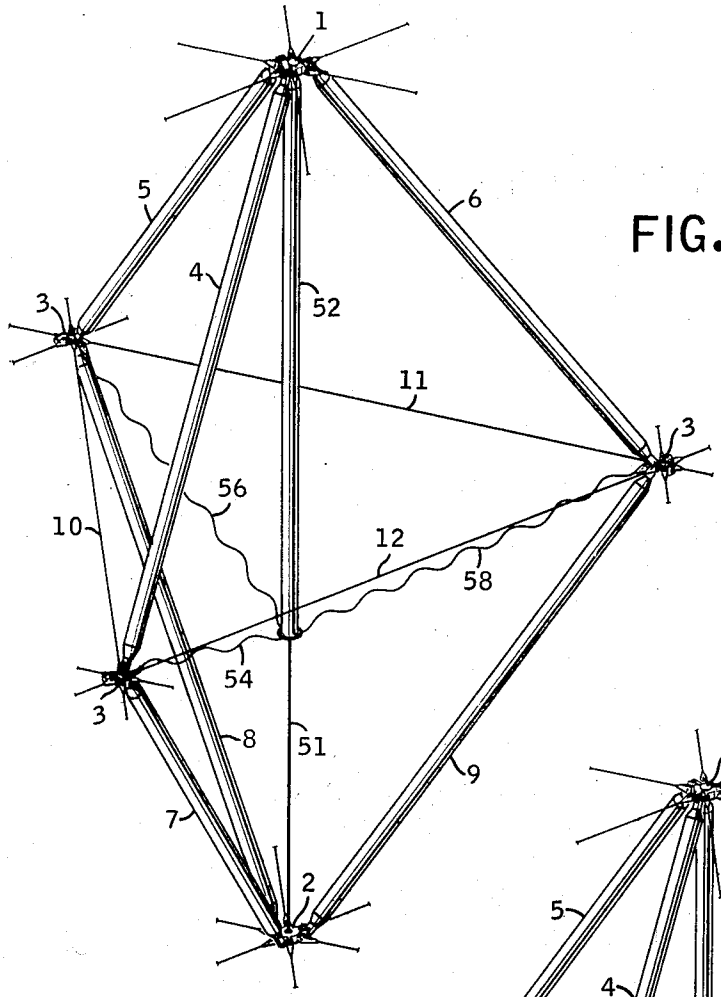

FIG. 8

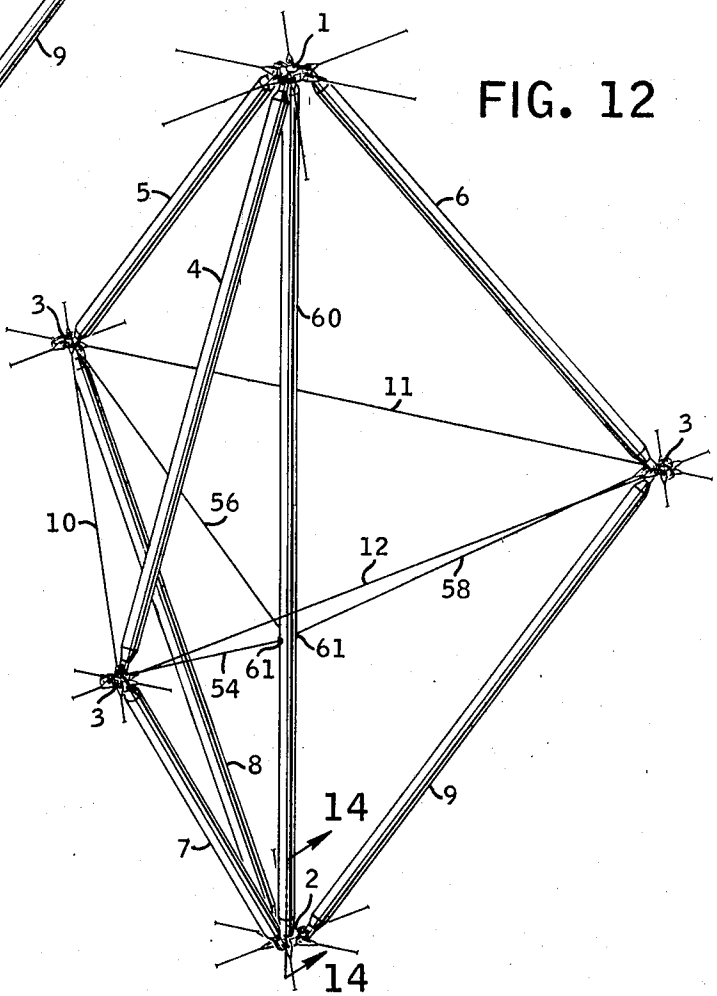

FIG. 12

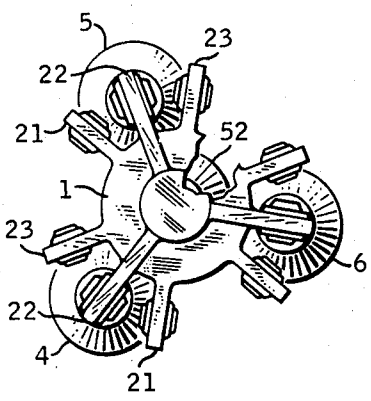

FIG. 10

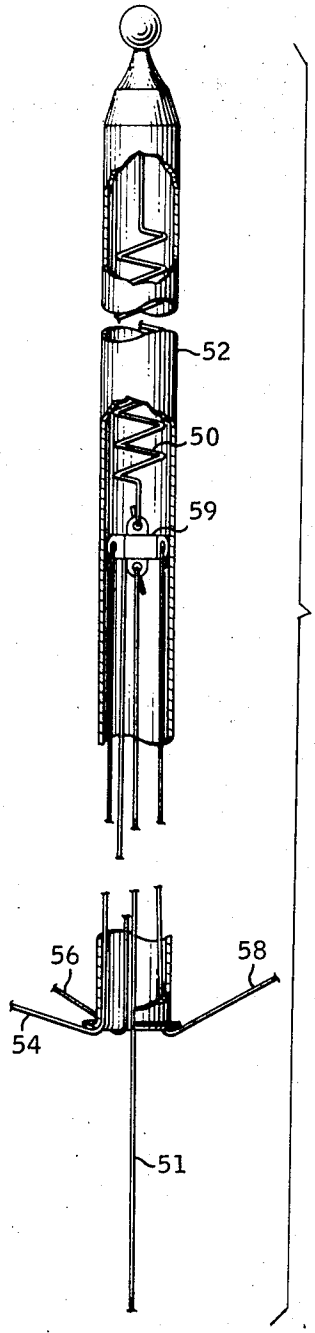

FIG. 9

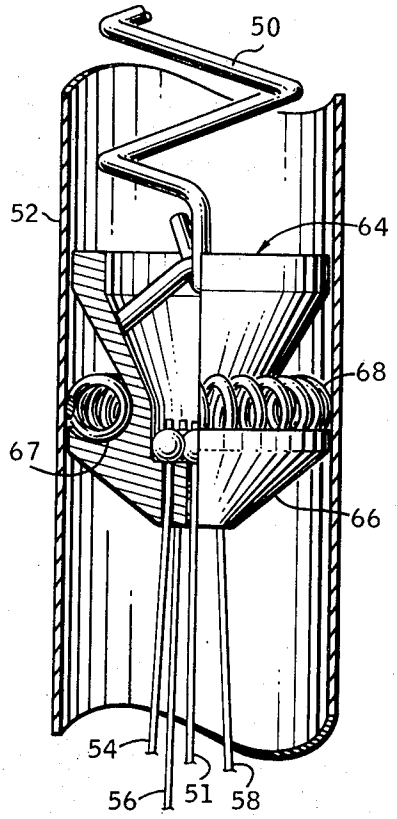

FIG. 11

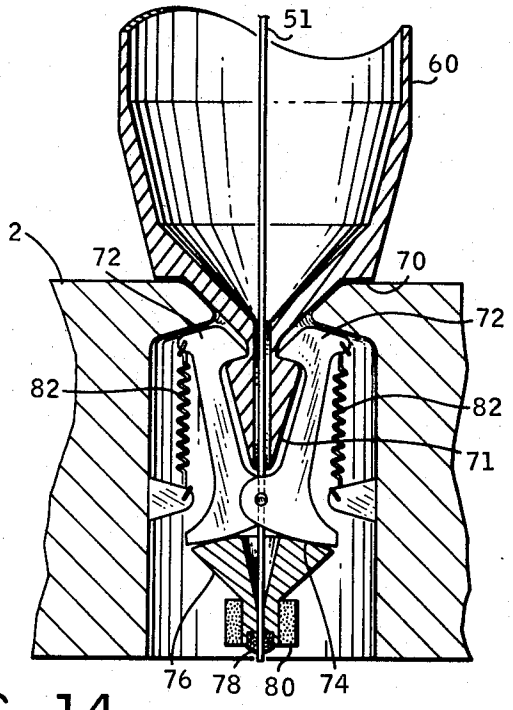

FIG. 14

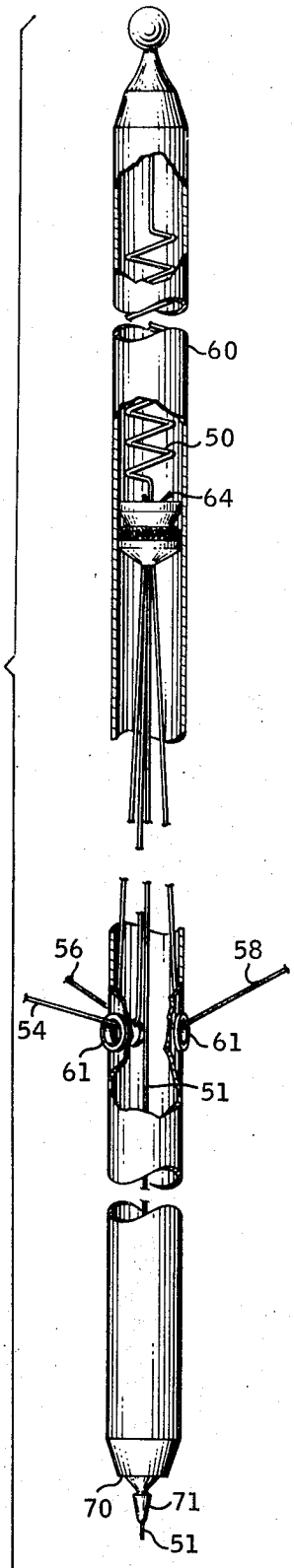

FIG. 13

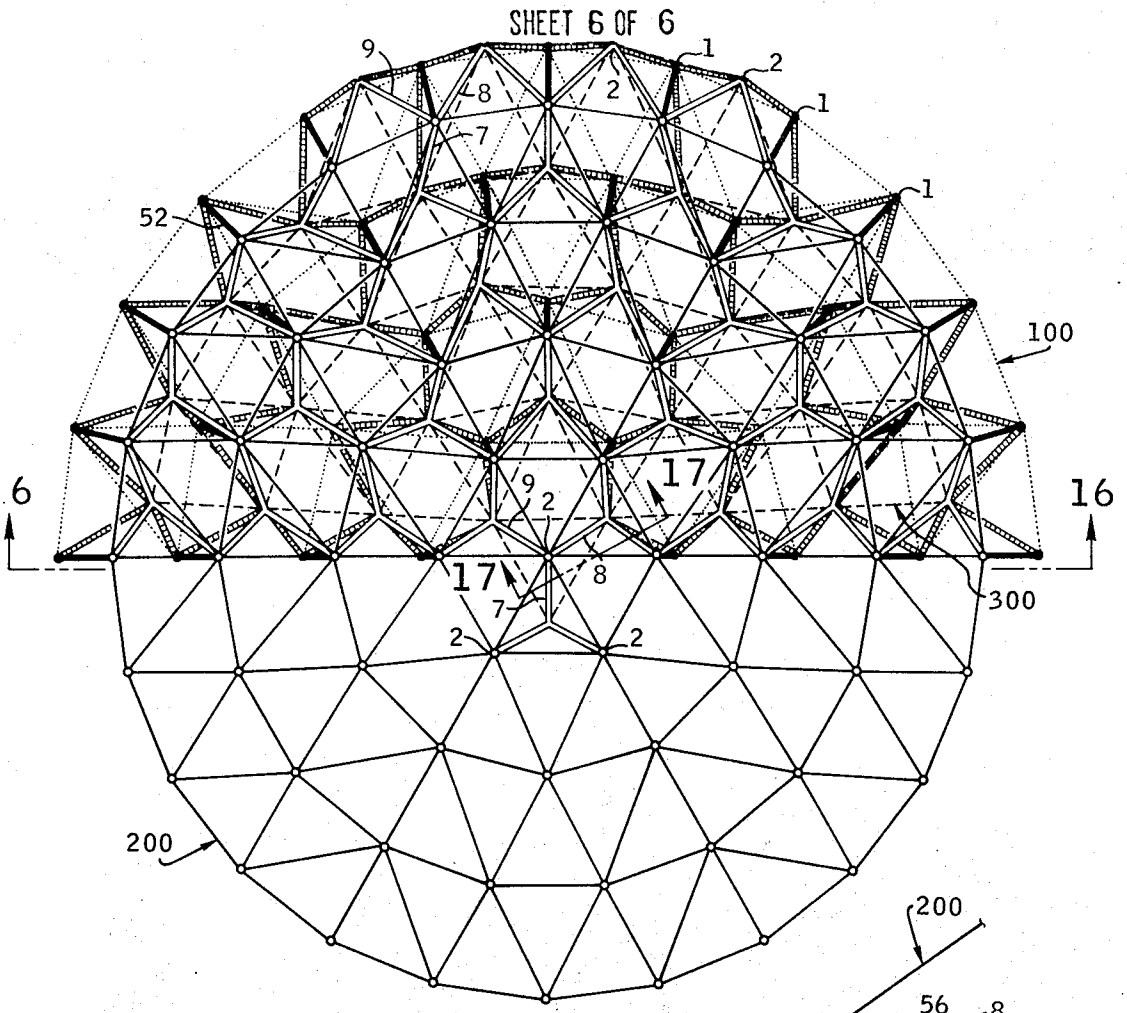

FIG. 15

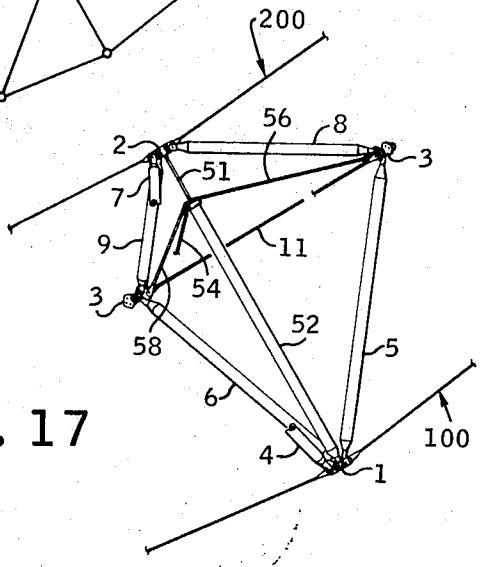

FIG. 17

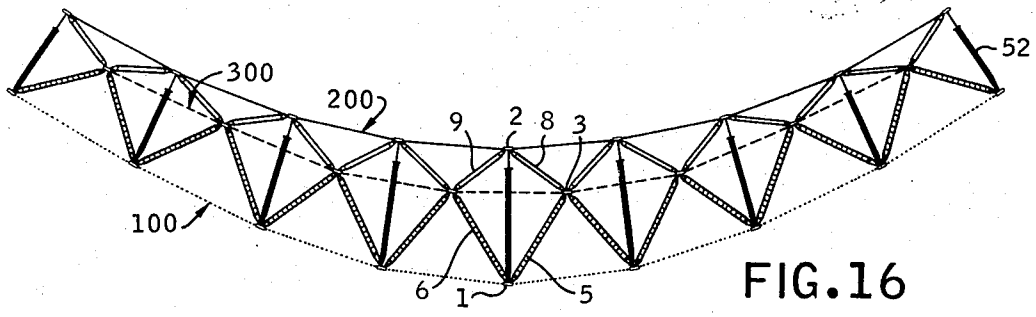

FIG. 16

EXPANDABLE RETRACTABLE STRUCTURE

BACKGROUND OF THE INVENTION

The invention relates to a structural system which may be employed in a wide variety of structures, including but not necessarily limited to bridges, towers, outriggers, booms, scaffolds and structural beams, wherever a quickly erectable structure is required. The invention further relates to a structural actuation system which will automatically expand or retract the structure.

A need has long existed for support structures having a high degree of portability in terms of compactness and light weight. When civil disaster strikes, it is usually required to quickly erect structures, such as communication towers or temporary bridges as examples, which possess the characteristic of portability. The structure must be capable of being moved into an area and set up for operation as quickly as possible. Further, it must be capable of being quickly collapsed or compressed into a compact package for rapid movement into other areas as directed by the flow or character of the disaster.

Heretofore, such features have been difficult to achieve, and structures were erected by assembling the structure in-place utilizing elements having quick attachment features or by assemblying prefabricated structural modules, which often required that a temporary falsework be first erected to support the workers and the partially completed primary structure. Modular-type construction, hinged rigid panels, and prefabricated standard structural elements all have the disadvantage of being bulky and cumbersome since, for reasons of interchangeability, the elements are sized to carry the peak load that may occur anywhere in the structure, but only occurs in a minority of the actual assembled structure. Secondly, most such structures require, to varying degrees, that assembly must be completed by workers at the site.

SUMMARY OF THE INVENTION

It is therefore an object of this invention to provide an improved expandable-retractable structure which overcomes the above mentioned difficulties.

Another object of the invention is to provide a fully fabricated expandable-retractable load supporting truss structure that is foldable into a compact unit for storage or portage purposes.

Another object of the invention is the provision of a light weight structure which is capable of being erected in a short time with a minimum of manpower, erection tools, or other facilities and structures.

Another object of the invention is the provision of a fully fabricated modular expandable structure which is easily portable and which when erected provides a strong and sturdy load carrying structure.

Another object of the invention is to erect a structure without the need of additional accessories and materials which after accomplishing the required purpose may be easily retracted into a compact portable package for subsequent use in the erection of another structure.

A further object of this invention is the provision of an actuation system for a truss structure which is capable of fully erecting the structure remotely on command without the use of hand tools or the utilization of manpower.

Another object of the invention is the provision of an actuation system for a portable truss structure which is capable of remotely retracting the structure into a compact portable package on command without the use of hand tools or the utilization of manpower.

Another object of the invention is the provision of a structure which may be expanded from a compact package into a straight structure, or if desired it may be configured to expand into a curved structure having single or compound curvature.

Another object of the invention is to provide an actuation system for expanding or retracting the structure whereby the elements of the actuation system comprise a portion of the load carrying structure when it is expanded.

The above objects and others are accomplished by the present invention utilizing a novel combination of flexible and rigid link structural elements interconnected to provide a compactly stored package which will expand into a rigid, light weight, load supporting structure. The structure comprises a plurality of modules wherein an individual module comprises two tripods, each rigid link of the first tripod being pivotally connected to a corresponding link of the second tripod to form three secondary pivots, and three flexible links or cables connecting the three secondary pivots one to the other and thereby limiting the expansion of the two tripods to form a double tetragonal structure. Contiguous modules are pivotally connected to one another at their respective secondary pivots and by cables at their respective primary pivots, said cables becoming taut when the structure is in the fully expanded position. The shape of the structure when expanded is dependent upon the individual lengths of the link elements, and since the entire structure is preassembled, there is no danger of assembling an incorrect length element in the structure at the erection site, as is possible with unassembled erectable structural elements currently in use.

BRIEF DESCRIPTION OF THE DRAWINGS

The advantages of the present invention reside in the construction and cooperation of elements as hereinafter described, reference being made to the accompnaying drawings forming a part of this disclosure wherein:

FIG. 1 shows a basic embodiment of the structural module, comprising two tripods pivotally joined together at each end of each rigid link.

FIG. 2 is a top view of the module in the retracted position.

FIG. 3 shows an integrated structural arrangement comprising a plurality of structural modules placed side by side.

FIG. 4 is an enlarged view of the upper primary pivot.

FIG. 5 is an enlarged view of a secondary pivot.

FIG. 6 is an enlarged view of the lower primary pivot.

FIG. 7 shows an embodiment which includes an actuator means located within the structural module of FIG. 1 for expanding the structure.

FIG. 8 shows an embodiment which includes a retracting means in the module of FIG. 7.

FIG. 9 is an enlarged partially sectioned view of the actuator tube of FIG. 8.

FIG. 10 is a top view of the module of FIG. 8 in the retracted position.

FIG. 11 is an enlarged cross-section of the actuator tube of FIG. 9 showing an embodiment which includes a non-reversing slider located therein.

FIG. 12 shows the module of FIG. 8, wherein the actuator tube is lengthened in such a manner that the tube may be utilized as one of the structural elements.

FIG. 13 is an enlarged partially-sectioned view of the actuator tube of FIG. 12.

FIG. 14 is an enlarged cross-section of the actuator tube latch taken on line 14—14 in FIG. 12.

FIG. 15 is a diagrammatic plan view of a double curvature structure comprising a plurality of modules having various length flexible links.

FIG. 16 is a diagrammatic cross-section of the curved structure taken on line 16—16 in FIG. 15.

FIG. 17 is a cross-section view of the curved structure taken on line 17—17 in FIG. 15 showing one individual structural module.

DETAILED DESCRIPTION OF THE INVENTION

Referring now to the drawings in detail, FIG. 1 is a view of the expanded structural module in its simplest form. The module when expanded may be described as two tripods, one comprising a first set of rigid links 4, 5 and 6, and the second comprising a second set of rigid links 7, 8 and 9. Links 4, 5, and 6 are pivotally joined together at a first primary pivot 1, and links 7, 8, and 9 are pivotally joined together at a second primary pivot 2. Each of the rigid links of the first tripod are joined to a corresponding rigid link of the second tripod, so that link 4 is pivotally joined to link 7 at a secondary pivot 3, and link 5 is joined to link 8 at another secondary pivot 3, and links 6 and 9 are pivotally joined at another secondary pivot 3. The rigid links 4, 5, 6, 7, 8, and 9 may be square, rectangular, channel, or round in cross-section, and may be constructed from any suitable material such as plastic or metal. It has been found advantageous to construct these members of aluminum or stainless steel alloy round tubing. Three bracing flexible links, 10, 11, and 12 are connected to the three secondary pivots such that bracing link 10 is connected from rigid links 4 and 7 to rigid links 5 and 8, bracing link 11 connects rigid links 5 and 8 to rigid links 6 and 9, and bracing link 12 connects rigid links 6 and 9 to rigid links 4 and 7. The flexible links 10, 11 and 12 may be constructed from any suitable material such as straps, single or multiple strand rope, chain, or cable of any suitable material such as plastic or metal. It has been found advantageous to construct these members of aluminum or stainless steel alloy cable to which terminal fittings may be joined by swaging, and for convenience these flexible links will hereinafter be simply referred to as cables. From the preceding it will be seen that the module shown in FIG. 1, with primary pivots 1 and 2 constrained or loaded toward each other, is a stable shape with bracing cables 10, 11, and 12 assuming tension and thereby maintaining the module shape.

When primary pivots 1 and 2 are moved apart, the bracing cables 10, 11 and 12 relax and the three secondary pivots 3 move together until the rigid links, 4 thru 9, are parallel to one another. This geometric arrangement thus possesses the ability to move either to an expanded position as illustrated in FIG. 1 or to a slim retracted position, which when viewed from above, as shown in FIG. 2, displaces an approximately equilateral triangular volume, which is naturally adaptable to hexagonal, rectangular, or triangular shaped storage packages when a plurality of the retracted modules are packaged together.

FIG. 3 illustrates a plurality of deployed structural modules, of the type illustrated in FIG. 1, placed side by side in a common plane and constrained in the open or expanded configuration. The primary pivots 1 and 2 are each spanned by an assembly of cables 100 and 200, respectively, and contiguous modules are pivotally joined one to another at their respective secondary pivots 3, with bracing cables 10, 11, and 12 of each module forming a third assembly of cables 300 thus forming a large integrated structure possessing the same expandable and retractable capabilities as the basic structural module shown in FIG. 1. When the modules have been expanded until their respective bracing cables 10, 11, and 12 have become taut and primary pivot cable assemblies 100 and 200 have become taut, the resulting expanded structure is of a fully triangulated stable geometry having all the useful rigid structure characteristics associated therewith, and capable of use as a structural beam in bridges or towers, as examples. Three modules are particularly called out in FIG. 3 and are identified by the location of their respective primary pivots, 1 and 2, as position A, position B, and position C. It will be noted that at position A a total of six cables, 101 thru 106, of top cable assembly 100 are connected to primary pivot 1, and six lower assembly cables, 201 thru 206, are connected to primary pivot 2. In the embodiment shown in FIG. 3, six top and six bottom cables are the maximum number connected to any individual primary pivot 1 or 2.

The module located at position B is along the edge of the structure where the upper primary pivot 1 is connected by four upper cables, 102 thru 105, and the lower primary pivot 2 is connected also by four lower cables, 202 thru 205, to the contiguous modules. Further, it should be noted that two of the three secondary pivots 3 of the position B module which are located along the edge of the structure are each pivotally attached to four rigid links, and the third pivot 3 is attached to six rigid links.

The module located at position C forms a corner of the structure where three upper cables, 102 thru 104, and three lower cables, 202 thru 204, connect the primary pivots 1 and 2 to the contiguous modules. Additionally, it will be noted that each of the three secondary pivots 3 of this corner module connect a different number of rigid links together. The secondary pivot 3 located in the corner connects two links, the pivot 3 located on the edge connects four links together and the third pivot 3 located inside the structure connects six rigid links together.

Referring to FIGS. 4, 5, and 6, which are enlarged views showing details of an upper primary pivot 1, a secondary pivot 3, and a lower primary pivot 2, respectively, it will be noted that certain structural members shown in FIG. 3 have been eliminated to more clearly show the details of the individual pivots. All three pivots, 1, 2, and 3 comprise a plurality of tongues circumferentially located in three groups of three tongues each, wherein the center tongue of each group is adapted to pivotally attach to a rigid link, and the tongues located to either side are each adapted for attachment of a cable. Specifically, in FIG. 4, the upper primary pivot 1 comprises three tongues 21, 22 and 23 grouped together with the center tongue 22 provided with a hole 26, adapted to pivotally attach rigid link 5

thereto, and tongues **21** and **23** are each provided with a hole **28** adapted to attach upper cables **100**, thereto. In a similar manner two additional groups of tongues **21, 22,** and **23** are located around the circumference of pivot **1** for attachment of rigid links **4** and **6**, and other upper cables **100**. Any suitable means for attaching rigid links and cables may be utilized such as clevis pins, bolts, or rivets.

The secondary pivot **3** of FIG. **5** is provided with three tongues **31, 32,** and **33** grouped together with the center tongue **32** provided with two holes **36** for attachment of upper link **5** and lower link **8** thereto. Tongues **31** and **33** are each provided with a hole **38** for attachment of bracing cables **10** and **11** thereto. In a similar manner two other groups of tongues **31, 32,** and **33** are located on the secondary pivot **3** for attachment of upper and lower rigid links **4, 7** and **6, 9** of adjacent modules. It will be noted that the center tongues **32** each contain a third hole **40**, which is not utilized in the structure illustrated in FIG. **3**. The function of the third hole **40** will be later described herein.

The lower primary pivot **2**, of FIG. **6** is likewise provided with three groups of tongues each group containing three tongues **41, 42,** and **43**, and again the center tongue **42** is adapted to pivotally attach rigid links **7, 8,** and **9** thereto, while each of the other tongues **41** and **43** are provided for attachment of lower cables **200**, thereto.

From the foregoing description it will have been observed that primary pivots **1** and **2** serve as pivoting means for each of their respective three rigid links, totalling the six rigid links, **4** thru **9**, of an individual module, whereas each secondary pivot **3** serves as the pivoting means for only two rigid links of any one individual module, but may provide this pivoting means for up to three separate modules simultaneously.

FIG. **7** shows an embodiment which includes an expanding actuator located within the basic structural module, wherein the actuator comprises tension actuator spring **50** connected at one end to the first primary pivot **1** and connected at the other end to an actuator cable **51**. Actuator cable **51** is connected to the second primary pivot **2**, thereby providing a tension tie between primary pivots **1** and **2** and biasing these primary pivots toward each other to cause expansion of the module into a stable structural form. Maintenance of the stable structural form is dependent on either sustained tension in the extension cable **51** or external compression loads at pivots **1** and **2** producing a net tension in bracing cables **10, 11** and **12** under all loading conditions of the expanded structure. It should be understood that the actuator spring **50** may span the entire distance between the two primary pivots **1** and **2** thereby eliminating the actuator cable **51**, or conversely the actuator cable may be constructed of an elastic material, such as bungee or shock cord, for example, and span the entire distance between the primary pivots **1** and **2** for biasing the primary pivots toward one another.

FIGS. **8** and **9** show an embodiment which includes a retracting actuator in the module of FIG. **7**, wherein the actuator comprises an actuator tube **52** attached to pivot **1**, and retracting cables **54, 56,** and **58** each attached to actuator spring **50** by means of a cable connector **59** and running down tube **52** to the lower end of tube **52** and then to each of the three secondary pivots **3** where connection is made to tongue **32** (FIG. **5**) by means of a clevis pin, or equivalent, utilizing the mounting hole **40** (FIG. **5**) located in tongue **32**. It will be noted that the actuator tube **52** is approximately the same length as the first set of rigid links **4, 5,** and **6** so that in the retracted position the three secondary pivots **3** are in close proximity to the lower end of the actuator tube **52**, thereby affording good mechanical advantage to the retracting cables **54, 56,** and **58** as they draw the three secondary pivots **3** together. To retract the module from the expanded position, actuator cable **51** is disconnected either from primary pivot **2** or from actuator spring **50**, the preferred being to disconnect from pivot **2** so that the actuator cable **51** is drawn into actuator tube **52** by the actuator spring **50** for storage. Any suitable cable disconnect may be used such as for example the embodiment shown in FIG. **14** which will be later described herein. At the same time that extension cable **51** is disconnected, the three retracting cables **54, 56** and **58** are being drawn up into the actuator tube **52** by actuator spring **50**, causing the three secondary pivots **3** to move together and primary pivot **2**, now disconnected from cable **51**, to freely move downward and farther away from primary pivot **1**, and the geometry of the structure returns to its original retracted position. Thus it can be seen that the initial upward travel of spring **50** moves primary pivot **2** upward, by means of cable **51**, until all slack is removed from bracing cables **10, 11,** and **12** whereupon the module is in the stable expanded position, and when actuator cable **51** is subsequently disconnected from primary pivot **2**, the second portion of upward travel of the spring **50** will cause retraction, as previously described. A plurality of such actuator systems operated simultaneously, one in each of the structural modules, causes general deployment and general retraction of the total structural assembly.

FIG. **10** is a top view of the structural module of FIG. **8** which has been returned to the retracted position wherein the primary pivot **1** is partially broken away to reveal actuator tube **52**.

Referring now to FIG. **11** and again to FIGS. **8** and **9**, there is shown an actuator embodiment which includes a non-reversing slider assembly **64** slidably fitted within actuator tube **52**. Like the cable connector **59** (FIG. **9**), the non-reversing slider assembly **64** is a means for attaching together the actuator spring **50**, the actuator cable **51**, and the three retracting cables **54, 56,** and **58**, however it is additionally a means for preventing extension of actuator spring **50**. Slider assembly **64** comprises a body **66** and a coil spring **68**. Slider body **66** includes a top portion which is an inverted conical section joining a cylindrical section to form an annular trough **67**. Fitted within this trough **67** is the coil spring **68**. Upward motion of slider body **66** drives the coil spring **68** down into the trough **67** and away from the inner wall surface of actuator tube **52**. Downward motion of the slider body **66** causes the coil spring **68** to rise and jam between the tube **52** inner surface and the conical surface of body **66** to prevent the downward movement of the slider. It will be remembered from previous description that the module was dependent on either tension in cable **51** or external compression loads at primary pivots **1** and **2** to produce tension in the three bracing cables **10, 11,** and **12**, and that the tension in cable **51** was provided by the preload of actuator spring **50**. If the actuator spring **50** is forced to extend due to the influence of a superior ex-

ternal load, and the bracing cables **10, 11,** and **12** go slack, the module will lose its shape stability. The non-reversing slider **64** will prevent this loss of shape stability by preventing any forced extension of actuator spring **50,** and is used for those conditions where external loads are expected to exceed the pretension of cable **51** provided by the preload of spring **50** and for other purposes which will hereinafter be described. It should be clear from the foregoing that the non-reversing means, comprising slider **64** and actuator tube **52,** may also be utilized in the module embodiment shown in FIG. **7** to provide greater tension capability for actuator cable **51** in those structural applications where the retraction capabilities of the embodiment shown in FIG. **8** are not required.

As previously described, stability of the module is provided by tension in the bracing cables **10, 11,** and **12.** In the deployed or extended position the retracting cables **54, 56,** and **58** are slightly slack, as shown in FIG. **8.** The retracting cables become taut only during the retraction cycle. If the retracting cables are sized in length so that they become taut as the structure attains the fully extended position and non-reversing slider **64** is disposed within actuator tube **52,** the structure is then in a state of static equilibrium with the tension loads in actuator cable **51** and retraction cables **54, 56,** and **58** reacted by axial compression in the six rigid link members **4, 5, 6, 7, 8,** and **9.** The bracing cables **10, 11,** and **12** are therefore redundant in such an embodiment and may be eliminated from the structure.

Referring now to the embodiment illustrated in FIGS. **12** and **13,** it will be observed that here the actuator tube **60** is of greater length than the actuator tube **52** of FIG. **8** and extends the entire distance from pivot **1** to pivot **2** when the module is in its expanded position. Three holes **61** through the wall of actuator tube **60,** located in alignment with the three secondary pivots **3** in their retracted positions, are utilized as fair-leads to permit retracting cables **54, 56,** and **58** to connect spring **50** to the three secondary pivots **3.** Expansion of the module is completed when the upward movement of pivot **2** is stopped by contact with the lower end of tube **60.** With the actuator tube **60** in abutting contact with pivot **2,** the tube **60** becomes a compression load carrying element of the structure, and cable **51** within tube **60** carries tension loads up the tube to non-reversing slider **64** wherein the tension load is transferred to actuator tube **60.** A more direct method of transferring tension loads into tube **60** is to provide a tension latch at pivot **2.** Then the actuator tube **60** becomes an integral element in the rigid triangulation of the elemental structural module, avoiding dependence on tension cable **51,** which eliminates need for non-reversing slider **64,** or dependence on bracing cables **10, 11,** and **12** or retraction cables **54, 56,** and **58** for structural integrity.

FIG. **14** is taken at line **14—14** in FIG. **12** and shows a portion of actuator tube **60** and primary pivot **2.** Tube **60** contains a flat surface **70** for abutting contact with primary pivot **2,** thereby facilitating the transfer of compression loads to the primary pivot. Also shown is an embodiment of primary pivot **2** which includes a latch means for a direct transfer of tension loads between the actuator tube **60** and the primary pivot **2.** The actuator tube terminates in a probe **71** which is shaped to engage a plurality of latch pawls **72.** In the embodiment shown the latch pawls **72** each have a cam surface **74** on the bottom portion which rides on a mating cam surface of latch ferrule **76** in such a manner that tension in cable **51** causes the pawls to swing toward one another into the latched position. A cable release embodiment is shown which is adapted for remote actuation, as for example by an electrical signal. Any suitable cable release may be employed, and where the deployed structure is accessible a manual release is preferred. The cable release shown here comprises a latch ferrule **76** fastened to actuator cable **51** by means of a solder ball **78** and a pyro heating unit **80** surrounding the latch ferrule **76.** To release cable **51** and retract the structure, an electrical or mechanical impulse is impressed on the heating unit **80** which initiates the burning of the unit, producing sufficient heat to melt the solder ball **78.** Upon melting of the solder, cable **51** is drawn up into tube **60** by actuator spring **50,** and latch ferrule **76** falls free. Without the force of the latch ferrule acting on the latch pawls **72,** the unlatching springs **82** are the dominant force, an the latch pawls move outward to the unlatched position. The structure thereupon is retracted by cables **54, 56,** and **58** (FIG. **12**) as previously described.

From the foregoing description it may be clearly seen that the disclosed double tetragonal structure may be employed in a variety of configurations that permit a high degree of selectivity in utilizing the configuration which is most efficient for the intended purpose. Where no automatic expansion or retraction is required, the structure may comprise a plurality of modules of the type shown in FIG. **1.** Where only automatic expansion of the structure is required, a plurality of modules of the type shown in FIG. **7** may be utilized, whereas if automatic expansion and retraction are necessary, a plurality of modules of the type shown in FIGS. **8** or **12** may be used.

Referring now to FIGS. **15** and **16,** which are diagrammatic top and side views of a large paraboloidal structural embodiment comprised of 61 individual modules, one of which is shown in detail in FIG. **17,** we see an example of a curved structure utilizing modules of the type previously shown in FIG. **8.** Such a structural embodiment utilizes modules having different length rigid links of the first and second tripods, and different cable lengths in cable assemblies **100** and **200** to form a curved surface, whereas it will be remembered the structure of FIG. **3** was comprised of equal length cables and rigid links which produced modules having symmetry. In order to more clearly illustrate the structural embodiment of FIGS. **15** and **16** the links have been diagrammatically illustrated, wherein the first set of rigid links **4, 5,** and **6** are shaded, the actuator tube **52** is black, cables **101** thru **106** of cable assembly **100** are dotted lines, bracing cables **10, 11,** and **12** which form cable assembly **300** are dash lines, primary pivot **1** is a black circle, and primary pivot **2** is a white circle. Retracting cables **54, 56,** and **58** are not diagrammatically shown in FIGS. **15** and **16** for clarity.

The structure of FIGS. **15, 16,** and **17** is expandable and retractable by means of the expansion and retraction capability of each individual module in the manner previously described herein. Contiguous modules are connected one to another in the same pattern sequence as the structural embodiment shown in FIG. **3,** such that the bracing cables **10, 11,** and **12** of cable assembly **300** define a pattern of triangles in the plan view wherein every other triangle defines the common base

of the said first tripod (links **4, 5,** and **6**) and second tripod (links **7, 8** and **9**) of an individual module. Another manner of visualizing this arrangement, in relation to FIGS. **3** and **15,** is to observe that every other triangle formed by bracing cables **10, 11,** and **12** of cable assembly **300** contains a primary pivot **1** and **2** located approximately centered in the plan view of the triangle, one above and one below, whereas every alternate triangle of cable assembly **300** is not the base of any module tripod and does not therefore have a primary pivot **1** and **2** above or below it.

It is understood that the foregoing disclosure of my invention is to be considered as merely illustrative and that many other arrangements may be devised to tailor the structure to desired requirements, and that the specification and drawings disclosed herein are not to be taken as a limitation, the spirit and scope of the invention being limited only by the claims.

I claim:

1. A modular structure capable of being expanded and retracted wherein an individual module comprises:
- a first set of three rigid links pivotally joined together at one end to form a first primary pivot;
- a second set of three rigid links pivotally joined together at one end to form a second primary pivot;
- the free end of each link of said first set of rigid links pivotally joined to the free end of a corresponding rigid link of said second set of rigid links to form three secondary pivots;
- a tubular actuator having its first end pivotally attached to said first primary pivot and extending toward said second primary pivot; and
- means located within said tubular actuator for irreversibly biasing said first and second primary pivots toward each other.

2. The structure of claim **1** further comprising a plurality of retracting cables operatively connecting said secondary pivots to said irreversible biasing means to urge said secondary pivots toward each other.

3. The structure of claim **2** wherein the second end of said tubular actuator is adapted to structurally bear upon said second primary pivot when said modular structure is expanded.

4. A modular structure capable of being expanded and retracted wherein an individual module comprises:
- a first set of three rigid links pivotally joined together at one end to form a first primary pivot;
- a second set of three rigid links pivotally joined together at one end to form a second primary pivot;
- the free end of each link of said first set of rigid links pivotally joined to the free end of a corresponding rigid link of said second set of rigid links to form three secondary pivots;
- a tubular actuator having a first end connected to said first primary pivot and a second end adapted to structurally bear upon said second primary pivot when said modular structure is expanded;
- a tension spring having a first end connected to said first primary pivot and located within said tubular actuator;
- an extension cable connecting the second end of said tension spring to said second primary pivot to bias said first and second primary pivots toward each other;
- a latch for structurally securing said tubular actuator to said second primary pivot;
- means for disengaging said latch and disconnecting said tension spring from said second primary pivot; and
- a plurality of retraction cables operatively connecting said secondary pivots to said tension spring for biasing said secondary pivots toward each other during a portion of the travel of said tension spring.

5. A structural module, capable of being expanded and retracted, comprising:
- a first set of three rigid links pivotally joined together at one end to form a first primary pivot;
- a second set of three rigid links pivotally joined together at one end to form a second primary pivot;
- the free end of each link of said first set of rigid links pivotally joined to the free end of a corresponding rigid link of said second set of rigid links to form three secondary pivots;
- three flexible links, each joining together two of said secondary pivots to complete a double tetragonal structure;
- a tension spring having a first end connected to said first primary pivot;
- an extension cable connected to a second end of said spring and to said second primary pivot;
- a plurality of retraction cables operatively connecting said secondary pivots to a second end of said tension spring for biasing said secondary pivots toward each other during a portion of the travel of said tension spring;
- a tubular actuator pivotally attached at the first end to said first primary pivot and extending toward said second primary pivot, said tubular actuator containing at least a portion of said tension spring and adapted to guide said retraction cables from within to outside of said tubular actuator; and
- means for disconnecting said tension spring from said second primary pivot.

6. The module of claim **5** wherein the second end of said tubular actuator is adapted to structurally bear upon said second primary pivot when said module is expanded.

7. The module of claim **6** further comprising a latch disposed within said second primary pivot to structurally secure said tubular actuator to said second primary pivot.

8. The module of claim **5** further comprising irreversibility means slidably located within said tubular actuator and operatively connected to said tension spring to permit said spring to travel in only one direction.

9. The module of claim **8** wherein the second end of said tubular actuator is adapted to structurally bear upon said second primary pivot when said module is expanded.

* * * * *