Nov. 18, 1941. S. ZONIS 2,263,533

ROTARY TAKE-UP FOR SEWING MACHINES

Filed Jan. 30, 1940

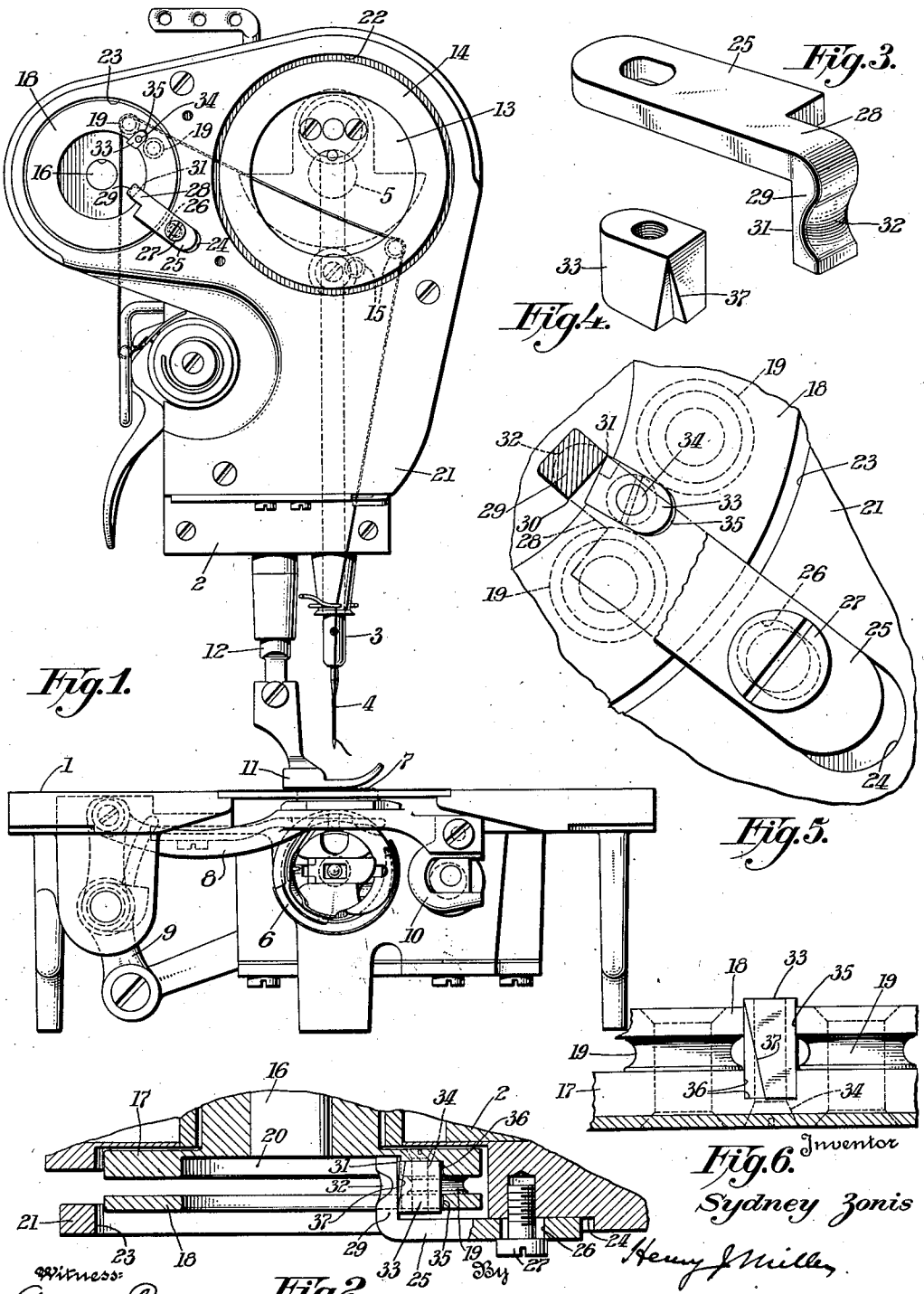

Inventor
Sydney Zonis

Witness:
Godfrey Peeina

By Henry J Miller
Attorney

Patented Nov. 18, 1941

2,263,533

UNITED STATES PATENT OFFICE

2,263,533

ROTARY TAKE-UP FOR SEWING MACHINES

Sydney Zonis, Stratford, Conn., assignor to The Singer Manufacturing Company, Elizabeth, N. J., a corporation of New Jersey

Application January 30, 1940, Serial No. 316,295

11 Claims. (Cl. 112—248)

This invention relates to improvements in rotary thread take-up mechanisms for sewing machines and more particularly in devices associated with rotary thread take-ups for preventing abnormal winding of thread about the thread-engaging element or elements of the take-up in the event of thread breakage.

The present invention is in the nature of an improvement in the thread-breaking device for rotary take-ups, disclosed and claimed in my prior U. S. patent application Serial No. 168,553, filed Oct. 12, 1937, and has for its object to provide means insuring positive severing of thread abnormally wound about a rotary take-up element, and at an early stage in the winding of the thread about said take-up element.

The invention consists in the thread-severing device for rotary take-ups, hereinafter described in connection with the accompanying drawing which illustrates a preferred embodiment of the invention, and in which:

Fig. 1 is a front end elevation of a sewing machine containing the improved thread-severing device. Fig. 2 represents an enlarged horizontal section of the rear take-up mechanism, the section being taken through the axis of rotation of the take-up element and in substantially a position of the movable thread-severing member in the horizontal plane containing said axis. Fig. 3 represents an enlarged perspective view of the stationary thread-severing member employed. Fig. 4 represents an enlarged perspective view of the rotating thread-severing member. Fig. 5 represents an enlarged fragmentary view in front elevation, and partly in section, of the thread-severing members and of the take-up mechanism. Fig. 6 represents an enlarged fragmentary elevation of the take-up thread-engaging elements and of the movable thread-severing member as viewed from the rotation-axis side of said elements and member.

The sewing machine illustrated in the accompanying drawing has a frame including a work-supporting bed-plate 1 and a bracket-arm head 2. Journaled for vertical reciprocation in the bracket-arm head 2 is a needle-bar 3, carrying at its lower end a needle 4, said needle-bar being reciprocated by any usual or suitable actuating connections with a horizontally disposed main actuating shaft 5.

Cooperating with the needle 4, in the formation of lock-stitches, is a loop-taker 6 of the horizontal-axis rotary-hook type and, as usual, performing a plurality of rotations for each reciprocation of the needle 4.

The work is advanced past the stitch-forming mechanism by a feed-dog 7 of the drop-feed type, the feed-dog 7 being carried by a feed-bar 8 pivotally connected, at its rearward end, to a feed-rocker 9 actuated in any suitable manner to impart work-advancing and return movements to the feed-dog 7. At its forward end, the feed-bar 8 carries a depending fork 10 embracing a suitable eccentric or a crank from which the feed-dog 7 derives rising and falling movements. Opposed to the feed-dog 7 is a presser-foot 11 secured to the lower end of the usual spring-depressed presser-bar 12 which is vertically movable in the bracket-arm head 2.

As in the rotary take-up construction of my prior patent application Serial No. 168,553 hereinbefore referred to, the main-shaft 5 at the bracket-arm head end thereof carries an inner take-up disk 13. The outer take-up disk of said prior construction has been cut away centrally to provide in the present machine a thread-confining ring 14 which is spaced from and secured to the inner disk 13 by a pair of radially equidistant thread-engaging studs or elements 15. Being carried by the main-shaft 5, the take-up elements 15 perform one rotation for each complete reciprocation of the needle 4 and in a counterclockwise direction when viewed as in Fig. 1 of the drawing.

The rear or supplemental take-up is carried by a rotary shaft 16 disposed in parallelism with the main-shaft 5 and actuated as described in said prior patent application Serial No. 168,553, or in any other suitable or preferred manner, to perform two rotations for each rotation of and in the same direction as the main-shaft 5. Carried by the take-up shaft 16 for rotation therewith is a flange or disk 17 disposed in substantially the same vertical plane as the front take-up disk 13.

A flat outer thread-confining ring 18 is secured in spaced relation to the supplemental take-up disk 17, for rotation therewith, by a pair of adjacent and radially equidistant thread-engaging studs or elements 19 which are preferably peripherally grooved as illustrated in the drawing and the opposite ends of which are riveted or otherwise suitably secured to the disk 17 and the ring 18. The face of the disk 17 opposed to the ring 18 is preferably provided with an annular recess 20. It will be understood, from the foregoing description, that the thread-engaging elements 19 perform two rotations for each rotation of the thread-engaging elements 15, the latter being structurally similar

to the elements 19 and supporting the ring 14 in the same manner.

Secured to the front end of the bracket-arm head 2 is a face-plate 21 having annular openings 22 and 23 therein to provide clearance for the rings 14 and 18, said face-plate thereby serving as a guard for the take-up mechanism. An additional guard or coverplate (not illustrated in the drawing) for the take-up mechanism is also preferably employed.

Adjacent the supplemental take-up device, the face-plate 21 is provided with a recess 24 in which is seated the shank of a stationary thread-severing member 25 confined by the parallel side walls of the recess 24 against lateral movement. The shank of said thread-severing member 25 is, however, provided with an elongated slot 26 entered by a screw 27 threaded into the face-plate 21, whereby the thread-severing member may be adjusted lengthwise of the shank 25 thereof. The recess 24 extends lengthwise in a direction such that its longitudinal center line is substantially radial to the axis of rotation of the take-up elements 19 and, consequently, the direction of adjustment of the thread-severing member 25 is likewise radial to said axis.

The shank of the thread-severing member 25 extends across the outer face of the take-up ring 18 in spaced relation thereto and in a plane parallel to a plane containing the orbit of rotation of the take-up elements 19. Adjacent the inner edge of the ring 18, the shank of the thread-severing member 25 is partly cut away to provide a shank-extension 28 of reduced width, said shank-extension 28 being bent inwardly at right angles to the shank to provide a ledger-blade 29 terminating within and in close proximity to the inner wall of the take-up recess 20. The ledger-blade 29 therefore extends lengthwise in a direction normal to a plane containing the orbit of rotation of the take-up elements 19. In addition, the ledger-blade 29 is canted widthwise by slightly bending the shank-extension 28 edgewise, as illustrated more particularly in Fig. 5 of the drawing, whereby the face of said ledger-blade proximate to the orbit of rotation of the thread-engaging elements 19 is inclined toward said orbit in a direction so that the edge 30 of said ledger-blade first approached by the take-up elements 19 is spaced farther from said orbit than is the opposite edge 31 of said ledger-blade.

The side face of the ledger-blade 29 remote from the orbit of movement of the elements 19 is cut away to provide a rounded recess 32 which is engaged by the needle-thread during a part of the stitch-forming cycle, whereby the thread is normally prevented from passing across the opposite face of the ledger-blade.

Cooperating with the ledger-blade 29 in severing thread when wound abnormally about the take-up elements 19, as may occur in thread breakage, is a movable or rotating thread-severing member 33 disposed between the take-up elements 19 for rotation therewith. To this end, the thread-severing member 33 is fixedly but detachably secured by a screw 34 in a slot 35 formed in the ring 18 and against a shouldered seat 36 provided in the take-up disk 17. The face of the thread-severing member 33 opposed to the ledger-blade 29 is normal to the plane of the orbit of rotation of the take-up elements 19, and said face of the member 33 is slightly inclined oppositely to that of the opposing face of the ledger-blade 29.

The inner leading edge of the thread-severing member 33 is lengthwise cut away triangularly, as illustrated in Fig. 4 of the drawing, thereby to provide a cutting-edge 37 inclined to the orbital plane of rotation of the take-up elements 19 and adapted lengthwise to progressively engage the ledger-blade 29 along substantially the edge 31 of the latter, the described canting of the ledger-blade 29 and inclination of the opposed face of the severing member 33 insuring that the cutting-edge 37 will not strike the edge 30 of said ledger-blade.

As the thread-severing member 33 is disposed between the two take-up elements 19, it is self-evident that when starting to wind about said elements the thread must pass across the cutting-edge 37 of said member 33, which cutting-edge spans the space between the disk 17 and ring 18. Consequently, in the first revolution of said take-up elements 19 after the thread extends across said cutting-edge 37, the thread will be carried between said cutting-edge 37 and the edge 31 of the ledger-blade, and will thus be severed in the plane of rotation of the thread-engaging member 33.

In order to overcome inaccuracies in manufacture and to provide positive thread-severing coaction between the thread-severing members 33 and 29, the ledger-blade member 29 is, preferably, relatively softer than the movable severing member 33, whereby the cutting-edge 37 of the latter can cut an edge in the ledger-blade and thereby insure that the entire length of the cutting-edge 37 engages the ledger-blade 29.

Having thus set forth the nature of the invention what I claim herein is:

1. A sewing machine having, in combination, a rotary thread take-up element, a stationary thread-severing member disposed within and in proximity to the orbit of rotation of said take-up element, and a movable thread-severing member supported for rotation with said take-up element and provided with a cutting edge for thread-severing coaction with said stationary severing member.

2. A sewing machine having, in combination, a rotary thread take-up element, a stationary thread-severing member disposed in proximity to the orbit of rotation of said take-up element, and a movable thread-severing member separate from and supported for rotation with said take-up element, one of said severing members having a cutting edge disposed at an inclination to the orbital plane of rotation of said take-up element and with respect to the other severing member for coaction therewith progressively lengthwise of said cutting edge.

3. A sewing machine having, in combination, a plurality of radially equidistant thread take-up elements rotatable about a common axis, a stationary thread-severing member disposed in proximity to the orbit of rotation of said elements, and a movable thread-severing member supported between said take-up elements for rotation therewith and having a cutting edge for coaction with said stationary member in severing thread wound about said elements.

4. A sewing machine having, in combination, a plurality of radially equidistant thread take-up elements rotatable about a common axis, a stationary thread-severing member disposed within and in proximity to the orbit of rotation of said elements, and a movable thread-severing member supported between said take-up elements for rotation therewith and for thread-

severing coaction with said stationary member.

5. A sewing machine having, in combination, a plurality of thread take-up elements rotatable about a common axis, a stationary thread-severing member, a movable thread-severing member supported between said take-up elements for rotation therewith and for coaction with said stationary member in severing thread wound about said elements, one of said thread-severing members having a cutting edge disposed for coaction with the other thread-severing member in the plane of rotation of said take-up elements

6. A sewing machine having, in combination, a rotary thread take-up element, a stationary thread-severing member disposed within and in proximity to the orbit of rotation of said take-up element, and a movable thread-severing member supported for rotation with said take-up element, said movable thread-severing member having a cutting edge disposed for coaction with the stationary thread-severing member in the plane of rotation of said take-up element.

7. A sewing machine having, in combination, a rotary thread take-up element, a stationary thread-severing member disposed in proximity to the orbit of rotation of said take-up element, and a movable thread-severing member supported for rotation with said take-up element and for thread-severing coaction with said stationary member, said movable thread-severing member having a cutting edge disposed in a plane normal to a plane containing the orbit of rotation of said take-up element.

8. A sewing machine having, in combination, a rotary take-up disk, a thread-confining ring spaced from and rotating with said disk, a thread take-up element disposed between said disk and ring for rotation therewith, a stationary thread-severing member disposed in proximity to the orbit of rotation of said take-up element and extending through said ring into proximity to said disk, and a movable thread-severing member supported for rotation with said take-up element and for coaction with said stationary member in severing thread between said members.

9. A sewing machine having, in combination, a pair of rotary thread take-up elements having an orbital path of movement, a stationary thread-severing member disposed in proximity to the orbit of rotation of said take-up elements and intersecting a plane containing said orbit, a movable thread-severing member supported between said take-up elements for rotation therewith and for coaction with said stationary member in severing thread therebetween, and means providing for relative adjustment of said members toward and from each other.

10. A sewing machine having, in combination, a rotary thread take-up element having an orbital path of movement, a stationary thread-severing member disposed in proximity to the orbit of rotation of said take-up element and intersecting a plane containing said orbit, means providing for adjustment of said stationary member radially of said orbit, and a movable thread-severing member coacting with said stationary member in severing thread therebetween, said movable severing member being disposed adjacent to and supported for rotation with said take-up element.

11. A severing machine having, in combination, a thread take-up element rotatable in an orbital path about a fixed axis, a stationary thread-severing member disposed within and in proximity to said orbital path, a movable thread-severing member supported adjacent to said take-up element for rotation therewith and having a cutting edge for coaction with said stationary thread-severing member in severing thread therebetween, said thread-severing members being so disposed relatively that the edge of the stationary member first approached by said movable thread-severing member is spaced from the path of movement of said cutting edge.

SYDNEY ZONIS.