Jan. 13, 1959 L. R. THORPE 2,868,371

DISPLAY PACKAGE

Filed July 12, 1957

FIG. 1.

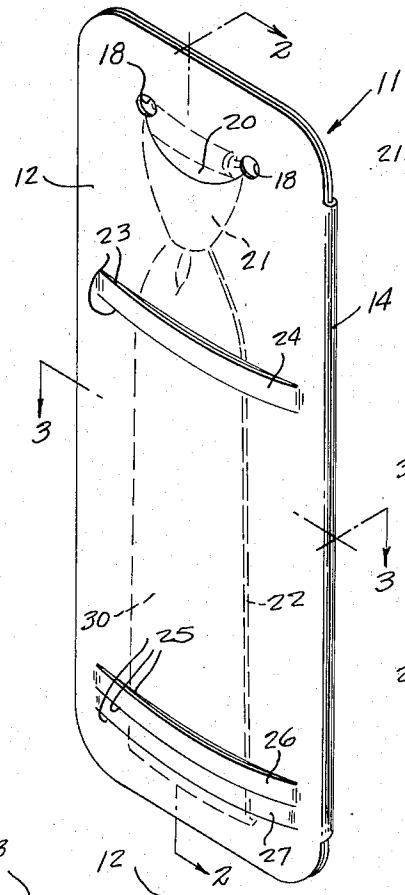

FIG. 2.

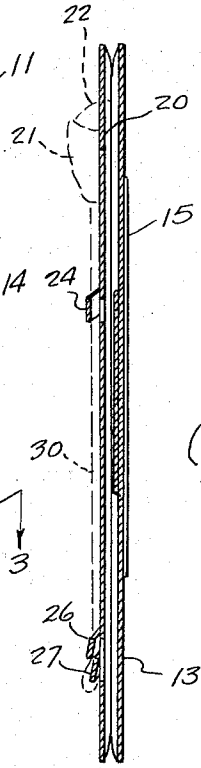

FIG. 3.

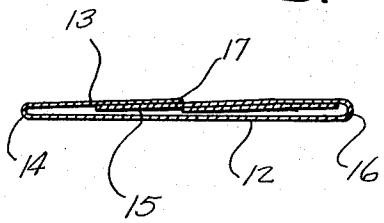

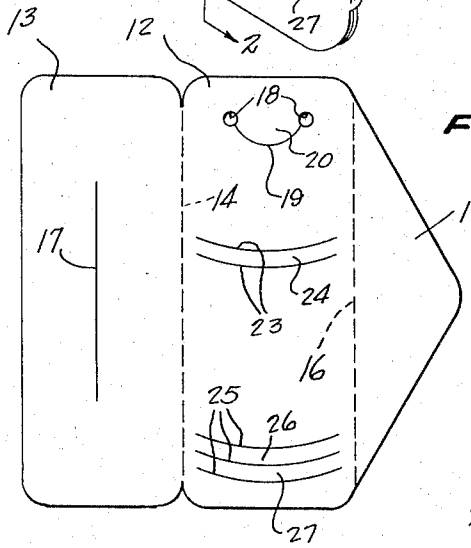

FIG. 4.

INVENTOR.
LAWRENCE R. THORPE,
BY
McMorrow, Berman + Davidson
ATTORNEYS.

United States Patent Office 2,868,371
Patented Jan. 13, 1959

2,868,371

DISPLAY PACKAGE

Lawrence R. Thorpe, Columbus, Ohio

Application July 12, 1957, Serial No. 671,503

3 Claims. (Cl. 206—79)

This invention relates to a display package and is used primarily as a merchandising display holder for a ready-tied necktie and other apparel.

A main object of the invention is to provide a novel and improved display package for a ready-knotted necktie, said package being simple in construction, being attractive in appearance, and serving as a means for displaying a necktie substantially in the same condition as when worn by the user.

A further object of the invention is to provide an improved merchandising display holder for a ready-knotted necktie, said holder involving inexpensive material, being compact in size, and serving to display a necktie in a most favorable manner while at the same time being easy to open so that the user may readily remove the necktie and wear same.

Further objects and advantages of the invention will become apparent from the following description and claims, and from the accompanying drawing, wherein:

Figure 1 is a perspective view of an improved merchandising display holder for a necktie constructed in accordance with the present invention.

Figure 2 is a vertical cross-sectional view taken substantially on the line 2—2 of Figure 1.

Figure 3 is a horizontal cross-sectional view taken substantially on the line 3—3 of Figure 1.

Figure 4 is an elevational view, to a reduced scale, showing the necktie holder of Figure 1 in open position.

Referring to the drawings, a necktie holder is designated generally at **11** and comprises a body of flat, flexible sheet material, said body comprising a generally rectangular front leaf **12** and a generally rectangular rear leaf **13** attached to the front leaf **12** at a fold line **14**. Designated at **15** is a generally triangular flap member formed on the edge of front leaf **12** opposite the fold line **14**, and being foldable with respect to front leaf **12** on a fold line **16**, as shown in Figure 4. The fold lines **14** and **16** thus coincide with the left and right longitudinal edges of the front leaf **12**, as viewed in Figure 4.

The rear leaf **13** is formed at its intermediate portion with a vertical slit **17** adapted to receive the apex portion of the triangular member **15** when the rear leaf **13** is folded against the front leaf **12**, in the manner illustrated in Figure 3, whereby to secure the respective rectangular leaves **12** and **13** adjacent to each other.

The front leaf **12** is formed at its upper portion with a pair of circular apertures **18**, **18** which are connected together by a downwardly convex arcuate slit **19**, defining a depending tongue **20** shaped to engage under the knot portion **21** of a ready-knotted necktie **22**, shown in dotted view in Figure 1. Front leaf **12** is formed at its intermediate portion with a pair of parallel, upwardly concave arcuate slits **23**, **23**, defining a retaining band **24** extending transversely across the front leaf **12**. The front leaf **12** is formed at its lower portion with a plurality of similar arcuate slits, shown at **25**, for example, three arcuate slits arranged parallel to each other and equally

spaced, as shown in Figure 4, defining a pair of arcuate retaining bands **26** and **27**.

In using the device, the ready-knotted necktie **22** is placed against the front leaf **12** with the tongue **20** engaged under the knot portion **21** of the tie and with the drape portion of the tie, shown at **30** in dotted view in Figure 1, engaged between the respective retaining bands **24**, **26** and the front leaf **12**. The lower portion of the drape section **30** of the necktie is engaged around the lower retaining band **27** and is passed rearwardly therebeneath and folded upwardly into the space between the front leaf **12** and the rear leaf **13**, as shown in Figure 2. The neck band portion of the tie is also received between the front leaf **12** and the rear leaf **13**, the ends thereof passing through the apertures **18**, **18**, and the body portion of the neck band being folded between the leaves **12** and **13** in the manner shown in dotted view in Figure 2, so as to be housed between said leaves.

As will be apparent from Figure 1, the necktie is thus supported in the display holder in an attractive position and provides substantially the same appearance as when it is worn. To remove the necktie from the holder, the user merely unfolds the leaves, after first disengaging flap **15** from slit **17**, whereby the drape portion **30** of the necktie may be removed from the retaining bands and the knot portion **21** may be disengaged from the tongue **20** and apertures **18**, allowing the neck band portion to be withdrawn from the holder and allowing the tie to be completely removed therefrom. Thereafter, the neck band may be adjusted to the correct size to allow same to be slipped over the user's head, and may be thereafter readjusted to fit the user in the usual manner.

While a specific embodiment of an improved merchandising display holder for a ready-knotted necktie has been disclosed in the foregoing description, it will be understood that various modifications within the spirit of the invention may occur to those skilled in the art. Therefore, it is intended that no limitation be placed on the invention except as defined by the scope of the appended claims.

What is claimed is:

1. In combination, a ready-knotted necktie having a knot portion, neckband portions and a depending drape portion, a body of flat flexible material folded to define a front leaf and a rear leaf, the front leaf being formed at its upper portion with an arcuate slit concaved upwardly to define a depending tongue engaging under the knot portion of said ready-knotted necktie and being formed with apertures at the ends of the slit through which the neck band portions of the necktie adjacent the knot portion pass, said front leaf being further formed with a plurality of vertically spaced parallel pairs of transverse slits through which said drape portion passes, said slits defining horizontal retaining bands adapted to retain the drape portion of the necktie against said front leaf, and a substantially triangular flap on the side edge of said front leaf, said rear leaf being formed with a slit adapted to receive the apex portion of the flap when the rear leaf is folded against the front leaf.

2. In combination, a ready-knotted necktie having a knot portion, neckband portions and a depending drape portion, a body of flat flexible material folded to define a front leaf and a rear leaf, the front leaf being formed at its upper portion with an arcuate slit concaved upwardly to define a depending tongue engaging under the knot portion of said ready-knotted necktie and being formed with apertures at the ends of the slit through which the neck band portions of the necktie adjacent the knot portion pass, said front leaf being further formed with a first pair of spaced parallel transverse slits at its upper portion and a second pair of spaced parallel

transverse slits at its lower portion through which said drape portion passes, said slits defining horizontal retaining bands adapted to retain the drape portion of the necktie against said front leaf, and a substantially triangular flap on the side edge of said front leaf, said rear leaf being formed with a slit adapted to receive the apex portion of the flap when the rear leaf is folded against the front leaf.

3. In combination, a ready-knotted necktie having a knot portion, neckband portions and a depending drape portion, a body of flat flexible material folded to define a front leaf and a rear leaf, the front leaf being formed at its upper portion with an arcuate slit concaved upwardly to define a depending tongue engaging under the knot portion of said ready-knotted necktie and being formed with apertures at the ends of the slit through which the neck band portions of the necktie adjacent the knot portion pass, said front leaf being further formed

with a first pair of spaced parallel transverse slits at its upper portion and a plurality of spaced parallel transverse slits at its lower portion through which said drape portion passes, said slits defining horizontal retaining bands adapted to retain the drape portion of the necktie against said front leaf, and a substantially triangular flap on the side edge of said front leaf, said rear leaf being formed with a vertical slit at its intermediate portion adapted to receive the apex portion of the flap when the rear leaf is folded against the front leaf.

References Cited in the file of this patent

UNITED STATES PATENTS

1,808,303	Freiler	June 2, 1931
2,021,070	Levine	Nov. 12, 1935
2,030,996	Lustig	Feb. 18, 1936
2,191,571	Lirette	Feb. 27, 1940