P. A. MORLEY.

Lantern.

No. 27,924. Patented April 17, 1860.

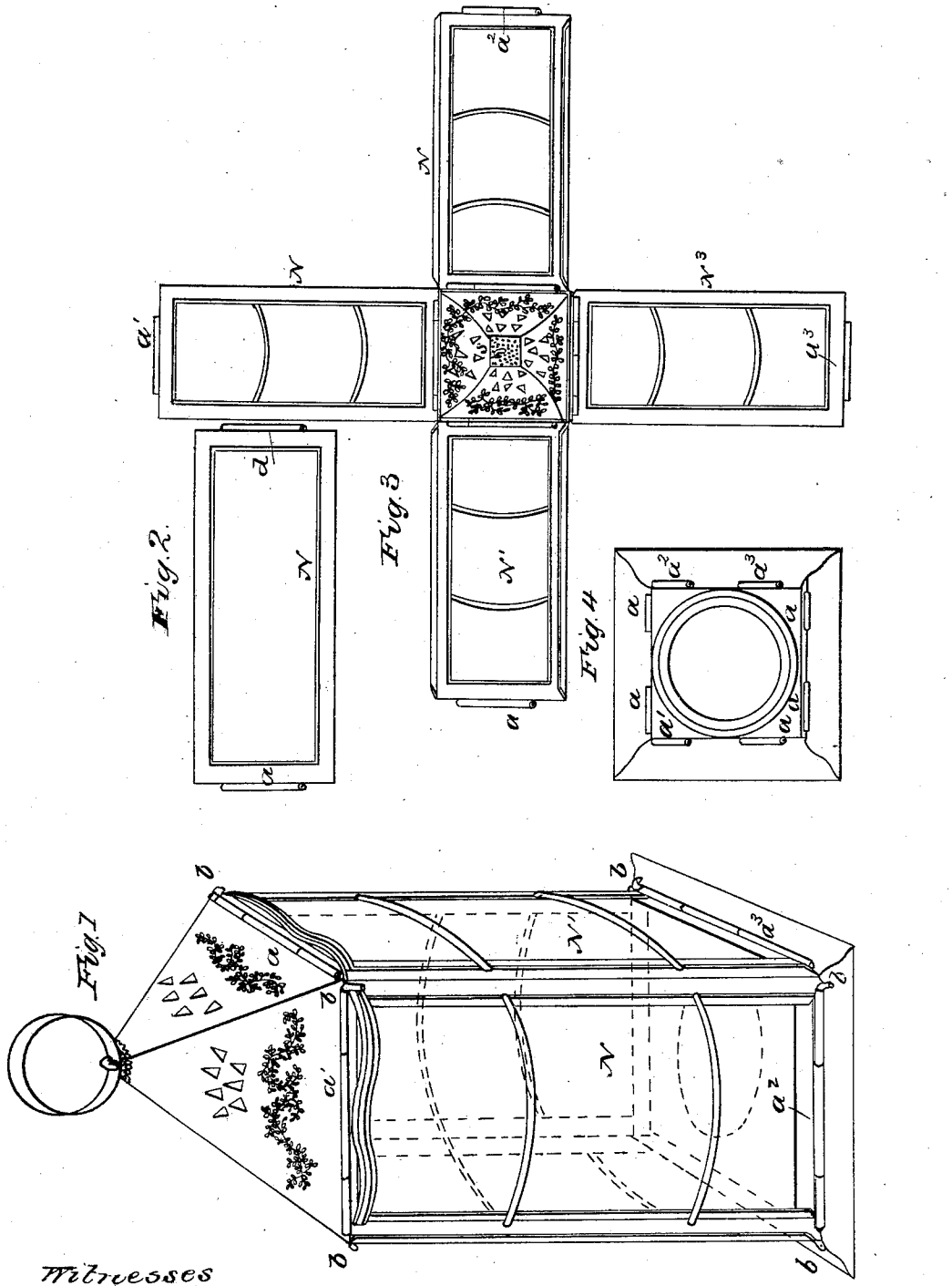

Witnesses
James P. McLean,
Annie S. McLean

Inventor
Philemon A. Morley

N. PETERS, Photo-Lithographer, Washington, D. C.

UNITED STATES PATENT OFFICE.

PHILEMON A. MORLEY, OF BROOKLYN, NEW YORK.

LANTERN.

Specification of Letters Patent No. 27,924, dated April 17, 1860.

To all whom it may concern:

Be it known that I, PHILEMON A. MORLEY, of Brooklyn city, in the county of Kings, in the State of New York, have invented certain new and useful Improvements in the Mode of Constructing Tin and other Metallic Lanterns; and I hereby declare the following to be a full, clear, and exact description thereof, reference being had to the accompanying drawings and to the letters of reference marked thereon, which letters correspond with and form a part of the specification.

To enable the public to fully understand the nature of my aforesaid improvement, and those skilled in the useful arts, to construct and operate the same I will describe it as follows.

Figure 1, represents a lantern drawn in perspective and showing the manner of securing the separate or individual sides or parts to the bottom and top thereof by means of a loop, or loops, (a, a',) and wire rods (b, b,) or any other suitable device so fashioned or formed that the sides of the lantern may be detached from the bottom and top if required by simply drawing the rods (b, b,) out of the loops (a, a'.) Fig. 2, represents one of the sides of the lantern detached in the manner aforesaid from the other parts. Fig. 3, is a perspective plan of the rectangular lantern having the bottom removed in order that the sides may be spread apart, or extended in such a manner that the flat surfaces of the side plates of glass are in a horizontal line, or plane with each other, hence a greater number of lanterns may be packed in any given space by the aforesaid mode of construction than by any other known device. Fig. 4, is a perspective drawing of the bottom of the lantern having loops (a, a', a^2, a^3).

The novelty of the above described invention does not consist in the construction of either of the individual parts of a lantern, neither is it confined to any specific shape thereof, but it may be applied to any lantern that can be formed in sections.

The tops (S,) of lanterns have been made to open and close like the top of a chest by means of stationary hinges, secured to the top of the sides (N, N′, N^2, N^3,), but I form the top of my lantern in one piece, as shown at (S,) and separate the lower sections or sides from each other, and from either the bottom or top, or from both at the same time, by means of an adjustable joint or hinge. This constitutes the novelty of my invention inasmuch as I am enabled to pack a greater number of lanterns for transportation in a small space in a much more secure and permanent manner, than by any other device ever known, therefore I believe it to be a new mode of packing lanterns for shipping purposes.

I do not claim the top (S,) as a whole, or in separate parts, neither do I claim hinging said top to the upper end of the side pieces or frames (N, N′, N^2,) as that is fully set forth and shown in Mr. Spaulding's Patent of September 14th, 1858.

Therefore what I claim as novel and desire to secure by Letters Patent of the United States is—

The arrangement of the sides (N, N′, N^2, N^3,) loops (a, a', a^2, a^3,) and rods (b, b, b, b,) in relation to the top and bottom of a lantern, in the manner and for the purpose specified, and shown in the accompanying drawings.

In testimony whereof I have hereunto subscribed my name in the presence of two witnesses.

PHILEMON A. MORLEY.

Witnesses:
JAMES P. MCLEAN,
ANNE S. MCLEAN.