US006817248B1

(12) **United States Patent**
Hanada

(10) **Patent No.: US 6,817,248 B1**
(45) **Date of Patent: Nov. 16, 2004**

(54) **HUMAN LUMBAR MODEL STRUCTURE CAPABLE OF OBTAINING STABILIZED DESIRED DATA AND METHOD FOR FABRICATING THE SAME**

(76) Inventor: **Keiichi Hanada**, 3-51-2-3-407, Kojima-cho, Chofu-shi, Tokyo (JP)

(*) Notice: Subject to any disclaimer, the term of this patent is extended or adjusted under 35 U.S.C. 154(b) by 2 days.

(21) Appl. No.: **10/445,465**

(22) Filed: **May 27, 2003**

(51) **Int. Cl.**[7] **G01L 7/00**
(52) **U.S. Cl.** **73/714**
(58) **Field of Search** 73/714, 756; 623/17, 623/18, 20; 606/53–71

(56) **References Cited**

U.S. PATENT DOCUMENTS

6,311,562 B1 11/2001 Hanada 73/714

OTHER PUBLICATIONS

K. Hanada, "A New Measurement Method for Quantifying the Ride Comfort", SAE International Conference, Detroit, 2002–01–1236, Mar. 2002 (corresponds to US patent No. 6,311,562).

K. Hanada, "Comparison of Vibrational Ride Discomfort Between Various Cars by New Quantitative Ride Discomfort Meter", SAE Noise & Vibration Conference & Exposition, Travers City, Michigan, 2003–01–1687, May 2003.

Primary Examiner—William Oen
(74) *Attorney, Agent, or Firm*—Collard & Roe, P.C.

(57) **ABSTRACT**

An abdominal/back muscle member **19** tightly surrounds narrowed portions **172** and **182** of an upper and a lower body members **17** and **18** of a lumbar assembly of human lumbar model structure. Shoulders **173** and **183** are formed at the bounds of the narrowed portion **172** and **182** from the remaining upper and lower portions of the upper body member and the lower body member **17** and **18** with a radial height larger than the thickness of the abdominal/back muscle member **19** to form hood-like radial flanges protruding from the outer upper and lower edges of the muscle member. The hood-like radial flanges effectively prevent the upper and lower edges of the muscle **19** from going over the shoulders, even if the maximum vertical loading is applied to the structure. In the human lumbar model structure, a lower element **112** of an upper lumbar member **11** is formed with a penetration path **34**, which axially extends therein and communicates with an inner cavity of an annulus fibrosus member **13** filled with the nucleus pulposus liquid **16** inside. The liquid can overflow the penetration path until the pressure of the nucleus pulposus liquid **16** becomes to an appropriate value.

5 Claims, 5 Drawing Sheets

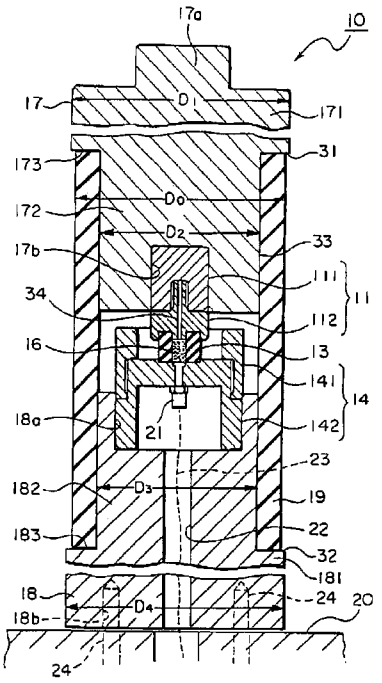

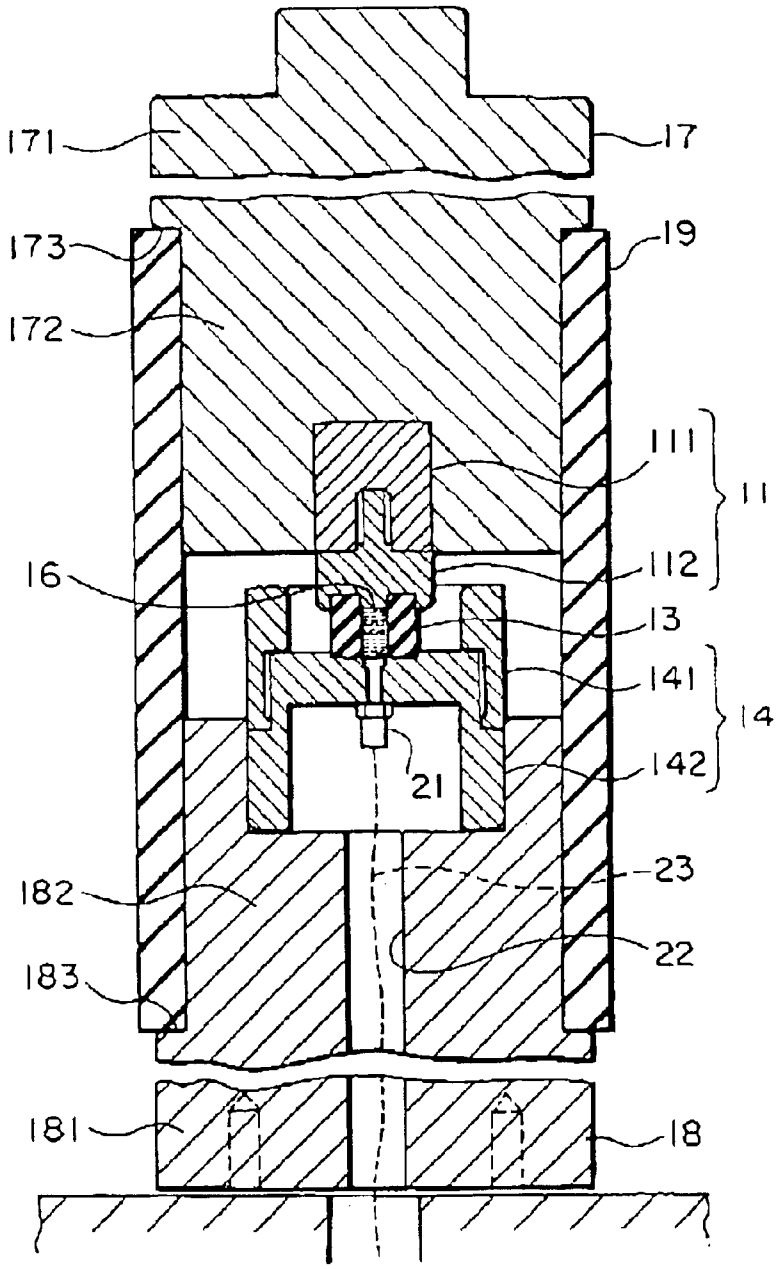
171
17
173
19
172
111
11
112
16
13
141
14
142
21
182
23
22
183
181
18

FIG. 1

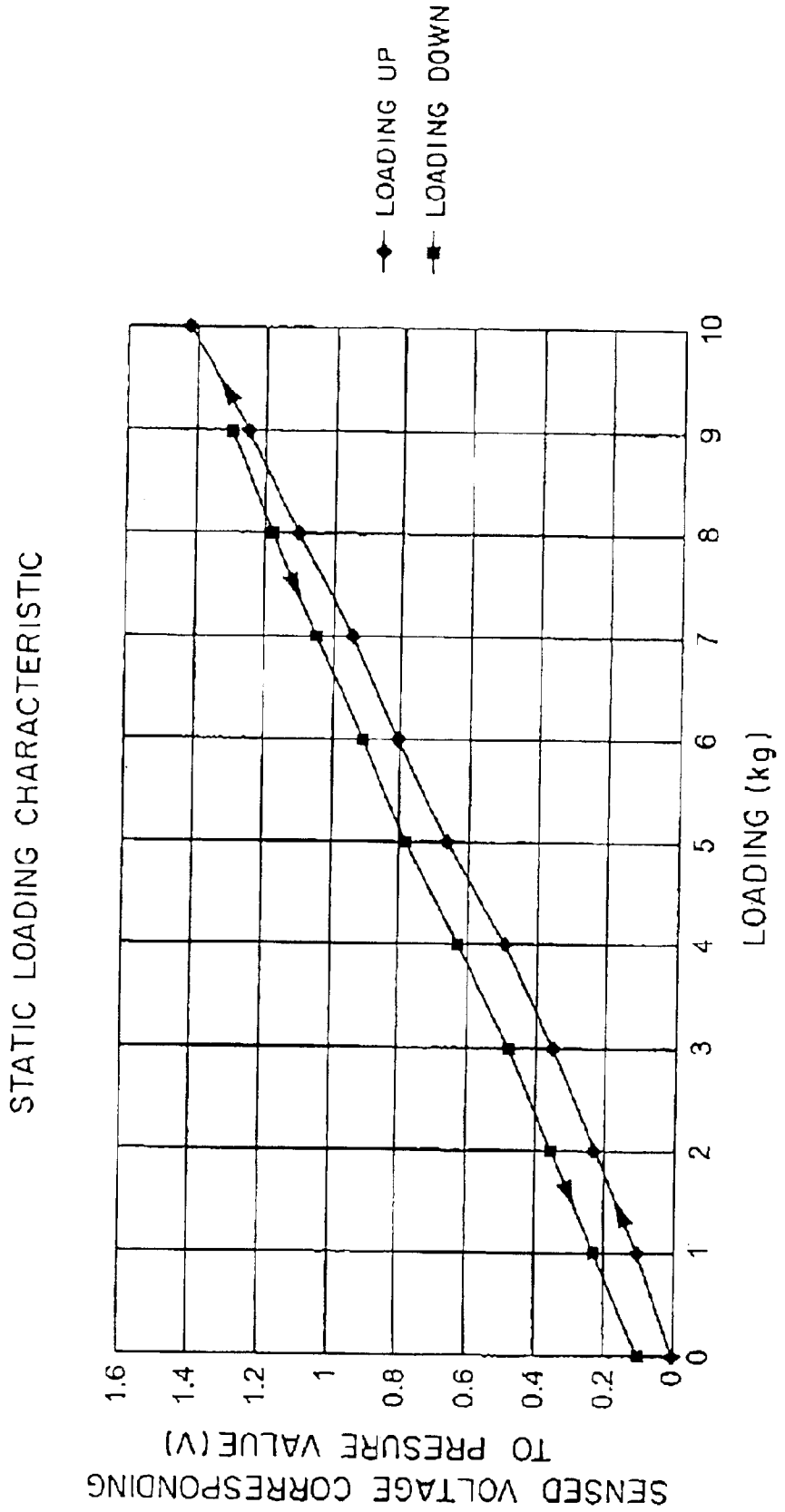
STATIC LOADING CHARACTERISTIC
LOADING UP
LOADING DOWN
SENSED VOLTAGE CORRESPONDING TO PRESSURE VALUE (V)
1.6
1.4
1.2
1
0.8
0.6
0.4
0.2
0
0
1
2
3
4
5
6
7
8
9
10
LOADING (kg)

FIG. 2

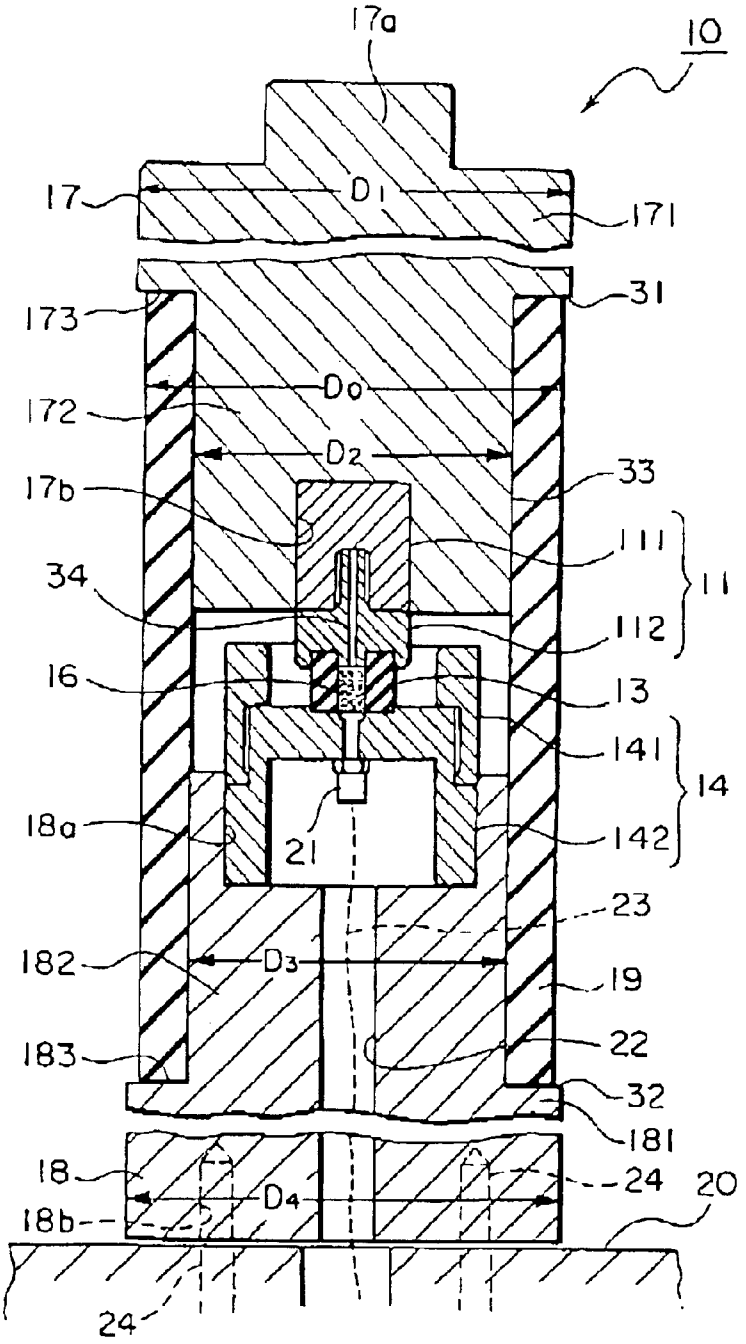
17a
10
17
D1
171
173
31
Do
172
D2
33
17b
111
11
34
112
16
13
141
14
18a
21
142
23
182
D3
19
183
22
32
181
18
24
20
D4
18b
24

FIG. 3

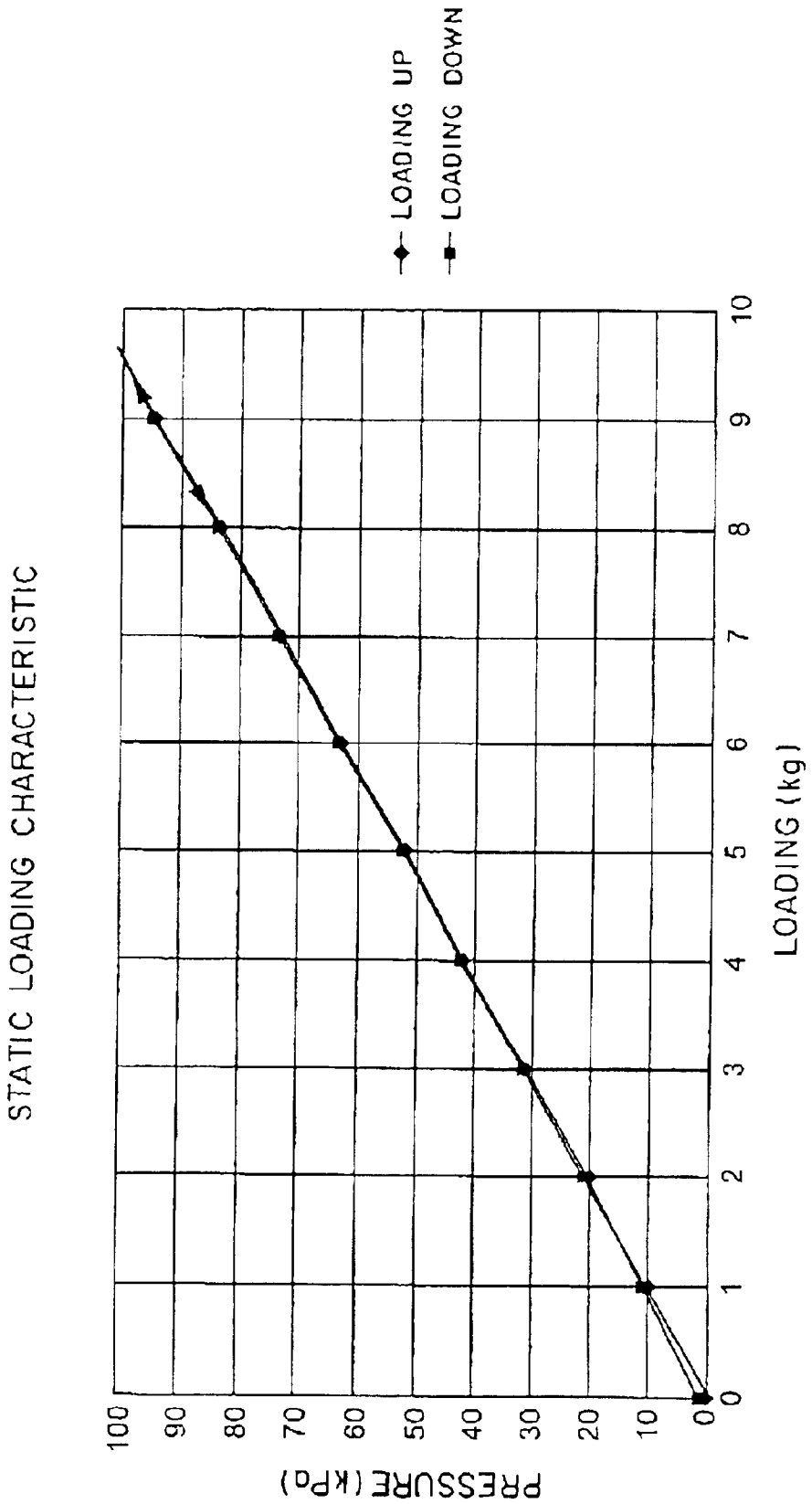
STATIC LOADING CHARACTERISTIC
LOADING UP
LOADING DOWN
PRESSURE (kPa)
100
90
80
70
60
50
40
30
20
10
0
0
1
2
3
4
5
6
7
8
9
10
LOADING (kg)

FIG. 4

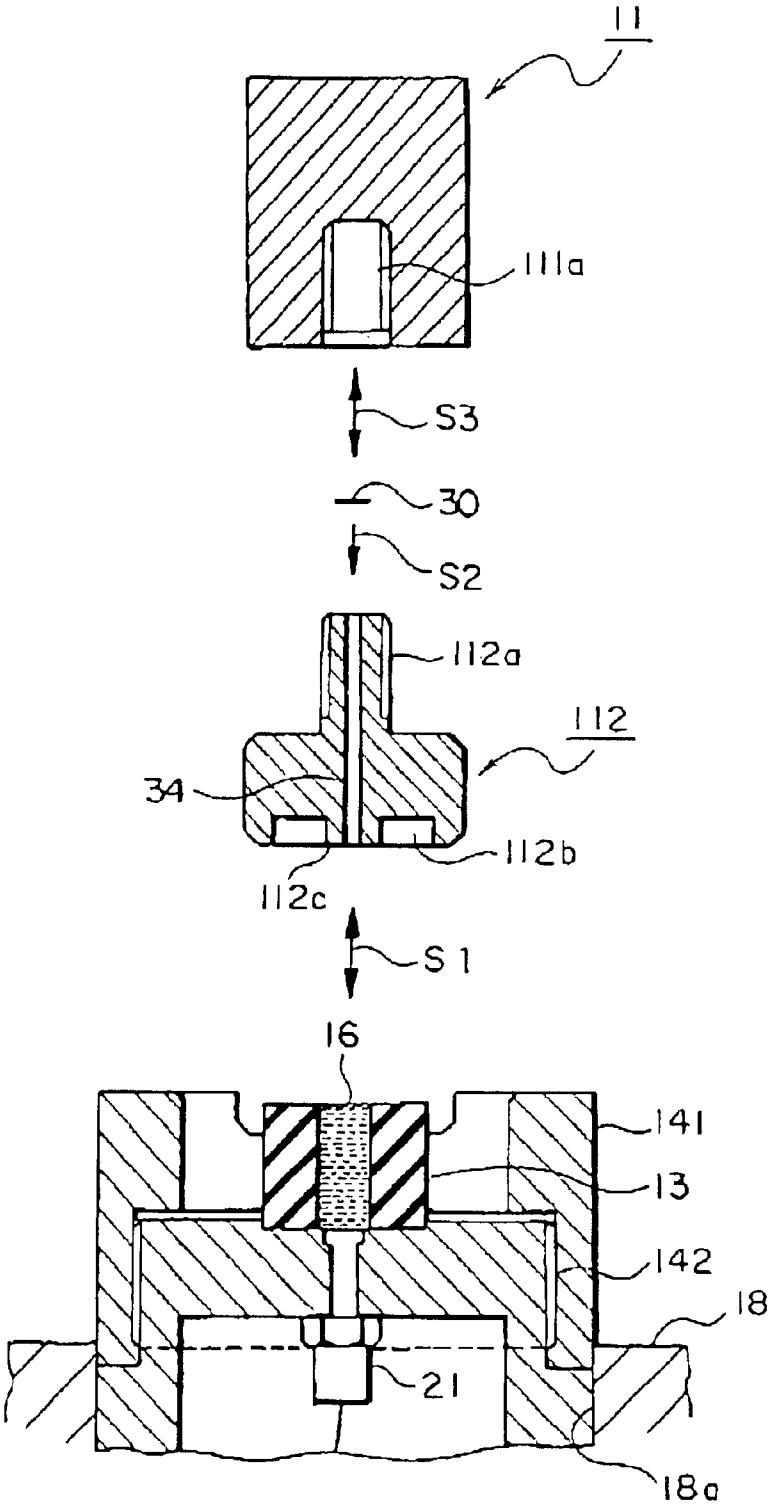

FIG. 5

HUMAN LUMBAR MODEL STRUCTURE CAPABLE OF OBTAINING STABILIZED DESIRED DATA AND METHOD FOR FABRICATING THE SAME

BACKGROUND OF THE INVENTION

This invention relates to a human lumbar model structure for simulating a pressure applied to nucleus pulposus in a human lumbar and a method for fabricating the structure.

In order to estimate and evaluate a ride vibration comfort which would be felt by a human being (an occupant, a driver, a passenger, etc.) on a vehicle such as a motor vehicle, bulldozer, a train, a vessel, and a spacecraft travelling with vibration, variation in speed, and/or change of acceleration, sensory tests have only been used. However, the test results widely fluctuate among individuals. Thus, no basis for objective, persuasive, or quantitative evaluation of vehicles in the ride vibration comfort has been established yet.

Long-distance or long-time drivers often suffer from herniation of a lumbar intervertebral disk. According to one of the most convincing theories accepted by many orthopedists, the occurrence and the aggravation of the above-mentioned hernia are correlated with ride vibration discomfort when travelling in motor vehicles.

The lumbar region of the vertebral column of a human body comprises five vertebrae, that is, 1st lumbar vertebra, 2nd lumbar vertebra, 3rd lumbar vertebra, 4h lumbar vertebra, and 5th lumbar vertebra arranged in the order from upside to down side. There is the lumbar intervertebral disk between each two adjacent lumbar vertebrae. The vertebral column has the nucleus pulposus therein. The herniation readily occurs at the lumbar intervertebral disk between 4th and 5th lumbar vertebrae in comparison with the other lumbar intervertebral disks.

In order to make it possible to objectively and quantitatively evaluate ride vibration comfort which is the cause of suffering from herniation of the lumbar intervertebral disk, U.S. Pat. No. 6,311,562 (B1), which was issued on Nov. 6, 2001 to the same inventor of the present invention, discloses a human lumbar model structure for simulating pressure applied to nucleus pulposus in the lumbar spine of a human body.

The present inventor made a sample of the human lumbar model structure according to the embodiment of FIG. **6** in the US patent and subjected to tests. The sample structure will briefly be described with reference to FIG. **1**.

The sample of the human lumbar model structure shown in FIG. **1** comprises a cylindrical lumbar assembly and an abdominal/back muscle member. The,lumbar assembly comprises an upper body member **17**, an upper lumbar member **11** corresponding to a lumbar vertebra such as the fourth lumbar vertebra, an annulus fibrosus member **13** corresponding to the nucleus puplosus, nucleus pulposus agent or liquid **16** in the annulus fibrosus member **13**, a lower lumbar member **14** corresponding to an adjacent lumbar vertebra such as the fifth lumbar vertebra, and a lower body member **18**. These members are formed in a cylindrical shape, coaxially arranged around a common center axis and are vertically superposed from top to bottom in this order.

The abdominal/back muscle member shown at **19** is made of an elastic material and has a hollow cylindrical shape. The abdominal/back muscle member **19** surrounds and tightens the lumbar assembly over at least a center area of a narrowed portion thereof extending from the midlevel of the upper body member **17** to the midlevel of the lower body member **18**. In detail, the upper body member **17** comprises an upper portion **171** and a narrowed portion **172** as its lower portion with a reduced diameter and has a shoulder **173** on its outer surface at a bound between the narrowed lower portion **172** and the upper portion **171**. Similarly, the lower body member **18** comprises a lower portion **181** and a narrowed portion **182** as its upper portion with a reduced diameter and ahs a shoulder **183** on its outer surface at a bound between narrowed upper portion **182** and the lower portion **181**. When the abdominal/back muscle member **19** is attached to the lumbar assembly, it tightly surrounds the narrowed portions **172** and **182** and has an inner diameter equal to the diameter of the narrowed portions **172** and **182** but has an outer diameter larger than an outer diameter of the upper portion **171** of the upper body member **17** and the lower portion **181** of the lower body member **18**. Thus, the shoulders **173** and **183** serve as stoppers against axial or radial movement of the abdominal/back muscle member **19**.

The upper lumbar member **11** comprises an upper element **111**, which is formed in a circular columnar block and tightly fitted into a bottom surface of the upper body member **17**, and a lower element **112**, which is a circular disk shape and threaded into a bottom surface of the upper element **111**. And the lower lumbar member **14** comprises an upper element **141** in a ring form and a lower element **142** in a cylindrical form with an upper dosed end. The upper element **141** is threaded onto the upper outer surface of the upper lower element **142**. The lower element **142** is tightly fitted into an upper surface of the lower body member **18**, and is provided with a pressure sensor **21** as a pressure transducer therein on a common center axis position. A signal cable **23** from the pressure sensor **21** is lead out through a vertical guide hole **22** formed in the lower body member **18**. The annulus fibrosus member **13** is made of a full hard and elastic material and has a flexible structure with thickish and annular form. The annulus fibrosus member **13** is disposed between the lower element **112** of the upper lumbar member and the lower element **142** of the lower lumbar member and tightly fitted at opposite ends to the both lower elements **112** and **142**. The annulus fibrosus member **13** is disposed in the ring-shape upper element **141** of the lower lumbar member **14**. By this structure, an inner cavity is formed in the annulus fibrosus member **13** and is filled with the nucleus pulposus liquid **16** which is liquid as an artificial nucleus pulposus therein.

A loading member modeling the upper half of a human body is arranged on the top surface of the human lumbar model structure composed by fabricating above-mentioned. The ride vibration comfort or discomfort is evaluated by recording results of detecting instantly and continuously changes of the output voltage of the pressure sensor **21** when the human body fluctuates. For this purpose, the completed human lumbar model structure was subjected to a static loading test in which data are recorded about changes of pressure obtained from the nucleus pulposus member **16** by the increase and the decrease of the vertical loading onto the model structure.

However, as results of the static loading experiment, as shown in FIG. **2**, we have found out a hysteresis phenomenon and non-linearity between pressure values obtained for loading up gradually and for loading down gradually from the value loaded once. This means that pressure fluctuation characteristic measured is not constant but unstable at different tests. Further, the same pressure value cannot be obtained for the re-assembling model after the model struc-

ture was disassembled. This means that the results of the measurements are not constant but unstable at every model structures assembled or reassembled.

Accordingly, we had various experiments so as to search reasons that cause the problems such as the hysteresis phenomenon, non-linearity and unstability. As the result, we found out the followings. When a vertical loading is applied to the human lumbar model structure, the abdominal/back muscle member **19** is distorted so that upper edge and the lower edge of the muscle member **19** go over the shoulders **173** and **183** to move onto the upper portion **171** of the upper body member **17** and the lower potion **181** of the lower body member **18**. The edge going-over phenomenon is one of reasons causing the problems, the present inventor considered. There is difference in contact forces with the upper body member **17** and the lower body member **18** and also in the internal stresses between portions of the muscle member **19** remaining on the upper and lower portions **171** and **181** of the upper and the lower body members **17** and **18** and edge portions going over the shoulders **173** and **183** onto the narrowed portions **172** and **182**. The internal stress difference or internal stress distribution affects restoration of the muscle member **19** when the muscle member **19** is relaxed from the loading. Accordingly, there appears the hysteresis between increase and decrease of the loading. Further, an amount of the edge going-over irregularly varies dependent on increase of the loading. Accordingly, the hysteresis is not constant over a range of loading varied. Accordingly, the restoration is not linear over the range of loading varied. Further, the amount of the edge going-over changes in tests repeated. Accordingly, the static lading characteristic is not constant in tests repeated. This means that the test results using the model structure are unstable.

In the fabrication processes of the model structure, the annulus fibrosus member **13** is put on the lower element **142** and in the upper ring element **141** of the lower lumbar member **14**. The nucleus pulposus liquid **16** such as grease is filled in the inner cavity of the annulus fibrosus member **13**, and then the lower element **112** of the upper lumbar member **11** is fit and tightened onto an upper portion of the annulus fibrosus member **13**. In this fabricating process, no reappearance is not insured in the pressure of the nucleus pulposus liquid **16** filled in the inner cavity of the annulus fibrosus member **13**. Further, any gas and/or liquid may possibly mixed in the nucleus pulposus liquid **16**. These cause unstability that measurement values of the pressure variation change in every model structures assembled or reassembled, the present inventor considers.

SUMMARY OF THE INVENTION

It is therefore an object of the present invention to provide a human lumbar model structure which can obtain a stable pressure variation characteristic in a static loading test and stably measuring pressure changes applied to the nucleus pulposus agent of an artificial nucleus pulposus.

It is another object to provide a method for fabricating the human lumbar model structure.

According to this invention, a human lumbar model structure for simulating pressure applied to nucleus pulposus in the lumbar spine of a human body is obtained. The structure comprises a cylindrical lumbar assembly having an upper body member, an upper lumbar member, an annulus fibrosus member, a lower lumbar member, and a lower body member, which are coaxially arranged around a common center axis and which are superposed vertically from top to bottom in this order. The upper body member comprises a first upper portion having a first diameter and a first lower portion having a second diameter smaller than the first diameter to form a first shoulder portion around the bound between the first upper portion and the first lower portion. The lower body member comprises a second upper portion having a third diameter and a second lower portion having a fourth diameter larger than the third diameter to form a second shoulder portion around the bound between the second upper portion and the second lower portion. The annulus fibrosus member comprises a thick cylindrical ring made of a hard elastic material and having upper and lower parts fitted into the upper and lower lumbar members, respectively. The fibrosus member has an inner cavity filled with a liquid the nucleus pulposus. An abdominal/back muscle member tightly surrounds the lumbar assembly and is made of an elastic material in a hollow cylindrical shape. The abdominal/back muscle member has an upper and lower cylindrical portion fitted onto the first lower portion of the upper body member and the second upper portion of the lower body member, respectively, so that the abdominal/back muscle surrounds and tightens the lumbar assembly over a center area extending from the first shoulder portion of the upper body member to the second shoulder portion of the lower body member, the abdominal/back muscle member having an outer diameter smaller than the first diameter and the fourth diameter when no vertical loading is applied to the lumbar model structure. A pressure sensor as a pressure transducer is provided to be arranged along a center axis of the lower lumber member in direct contact with the liquid as the nucleus pulposus for detecting the variation of the pressure of the liquid in the fibrous member.

According to the human lumbar model structure, the first and second shoulder portions form the hood-like radial flanges radially outwardly protruding over the outer edges of the abdominal/back muscle member to prevent the upper and lower edges of the abdominal/back muscle member from going over the first and second shoulders to move onto the upper portion of the upper body member and the lower portion of the lower body member.

Accordingly, the human lumbar model structure of this invention can provides stabilized static loading characteristic with linearity and no hysteresis.

According to another aspect of this invention, the human lumbar model structure has a penetration path in the lower element of the upper lumbar member, the penetration path upwardly extends from the inner cavity of the annulus fibrosus member in the axial direction to open in a top surface of the lower element of the upper lumbar member. In the fabrication of the human lumbar model structure, the nucleus pulposus liquid in the cavity can overflow the upper opening of the penetration path and can reach a stable condition having a predetermined pressure value. Accordingly, the human lumbar model structure can provide test data stabilized.

The human lumbar model structure according to this invention can be fabricated by the following method, which comprises steps of:

tightly fitting the lower lumbar member with the pressure sensor into an upper surface of the second upper portion of the lower body member;

tightly fitting the annulus fibrosus member to the lower lumbar member;

filling the liquid as the nucleus pulposus into the inner cavity thereof;

tightly fitting the lower element of the upper lumbar member to the upper portion of the annulus fibrosus member;

making the liquid overflow from an upper opening of the penetration path of the lower element;

tightly fitting the upper element of the upper lumbar member to the lower element of the upper lumbar member;

tightly fitting the lower portion of the abdominal/back muscle member onto the second upper portion of the lower body member; and

tightly fitting the upper body member to the upper element of the upper lumbar member, while the first lower portion of the upper body member being fitted into the upper portion of the abdominal/back muscle member.

BRIEF DESCRIPTION OF THE DRAWINGS

FIG. **1** shows a vertical sectional view of a human lumbar model structure known in the prior art;

FIG. **2** shows an experimental test result of static loading characteristic obtained from the human lumbar model structure illustrated in FIG. **1**;

FIG. **3** shows a vertical sectional view of a human lumbar model structure according to an embodiment of this invention;

FIG. **4** shows an experimental test result of a static loading characteristic obtained from the human lumbar model structure illustrated in FIG. **3**; and

FIG. **5** shows a perspective view of a main portion in the human lumbar model structure of FIG. **3**, being in an assembled state for explaining fabricating steps of the structure.

DESCRIPTION OF PREFERRED EMBODIMENT

Referring to FIG. **3**, the human lumbar model structure **10** shown therein is one according to an embodiment of this invention and similar to the human lumbar model structure known in the prior art shown in FIG. **1**, except for the differences described below. In FIG. **3**. similar parts are represented by the same reference numerals in FIG. **1** and description thereto are omitted for the purpose of simplification of the description.

With respect to a difference from the prior art structure shown in FIG. **1**, the outer diameter Do of the abdominal/back muscle member **19** is relatively smaller than any one of the outer diameter D1 of the upper portion **171** of the upper body member **17** and the outer diameter D4 of the lower portion **181** of the lower body member **18**. It is needless to say that the outer diameters D2 and D3 of the narrowed lower and upper portions **172** and **182** of the upper and lower body members **17** and **18** are smaller than the outer diameters D1, D4 and Do of the upper and lower portions **171** and **181** of the upper and lower body members **17** and **18** and the abdominal/back muscle member **19**. Usually, the diameters D2 and D3 are made equal to one another and also are equal to an inner diameter of the abdominal/back muscle member **19** fitted on the lower and upper portions **172** and **182** of the upper and lower body members **17** and **18**. The diameter D1 of the upper portion **171** of the upper body member **17** also is usually equal to the diameter D4 of the lower portion **181** of the lower body member **18**.

According to the relationship of various sizes or diameters described above, the upper and lower shoulders **173** and **174** have hood-like flanges or shed-roofs **31** and **32** protruding outwardly from the opposite outer edges of the abdominal/back muscle member **19**. The hood-like radial flanges **31** and **32** have a radial space size that is determined by the difference between the diameter D1 (=D4) and Do.

In other words, the cylindrical lumbar assembly is formed with an annular recess portion **33** around the assembly and axially extending between the upper and lower shoulders **173** and **183**. The abdominal/back muscle member **19** is tightly fitted in the annular recess portion **33**. The annular recess portion **33** has a radial depth larger than the radial wall thickness of the abdominal/back muscle member **19**.

Comparing with the shoulders **173** and **183** of small radial heights in the prior art structure in FIG. **1**, the hood-like radial flanges **31** and **32** effectively stop movement of the upper and lower edges of the abdominal/back muscle member **19** going over the shoulders **173** and **183**, even when the vertical loading is applied to the human lumbar model structure. It is not required that the height of the hood-like radial flange **31** and **32** is very large, but it is necessary to have a size sufficient to prevent the edge of the abdominal/back muscle member **19** from going over the shoulder to move onto the upper portion **171** and the lower portion **181** of the upper body member **17** and the lower body member **18**, when the vertical loading is applied to the human lumbar model structure **10**.

Another difference from the prior art structure is that a penetration path **34** is formed in the lower element **112** of the upper lumbar member **11** along the central axis of the lower element **112**.

Next, referring to FIGS. **3** and **5**, description will be made of the penetration path **34**, the annulus fibrosus member **13**, the upper lumbar member **11** and the lower lumbar member **14**.

As illustrated, the upper element **111** of the upper lumbar member **11** has a cylindrical shape and has a threaded hole **111***a* extending from the center of its bottom surface upward in an axial direction. A bottom of the threaded hole **111***a* forms a plane so as to shut up a liquid exit of the penetration path **34** of the, lower element **112**, as will later be described.

The lower element **112** comprises a cylindrical disk portion and a threaded portion **112***a* protruding upward from the center of the top surface of the cylindrical disk portion. The penetration path **34** extends from the bottom surface to the top end of the threaded portion **112***a* along the central axis. The lower element **112** fixes a shutting tape **30** on the top end of the threaded portion **112***a* to thereby close a top opening, as a liquid exit, of the penetration path **34**. The lower element **112** is fixed to the upper element **111** by screwing the threaded portion **112***a* with a narrow gap for a ceiling of the threaded hole **111***a*. The lower element **112** is also provided with an annular groove **112***b* formed in its bottom surface to be coupled with the annulus fibrosus member **13**. The lower element **112** is put on the fibrosus member **13** with an upper end of the fibrosus membe **13** being fitted into the annular groove **112***b*. In the state, a lower opening of the penetration path **34** communicates with the inner cavity of the fibrosus member **13**, so that the nucleus pulposus liquid **16** filled in the inner cavity rises up in the penetration path **34** and may overflow through the top opening as the liquid exit of the penetration path **34**. This is because a central projection **112***c*, which defines an inner wall of the annular groove **112***b*, partially invades into the inner cavity of the fibrosus member **13**.

The arrangement of the annulus fibrosus member **13**, the upper element **141** and the lower element **142** of the lumbar member **14**, and the lower body member **18** illustrated in FIG. **5** is similar to that described above referring to FIG. **1**.

In order to experimentally simulate a human body, A sample of the human lumbar model structure is produced according to this invention. In the sample, the upper and lower elements **111** and **112** of the upper lumbar member **11**, which is corresponding to the fourth lumbar vertebra, have

cylindrical shapes with heights of about 50 mm and 20 mm, and outer diameters of about 33 mm and 32 mm, respectively. The threaded portion **112***a* has a height of about 25 mm. The annular groove **112***b* has a depth of about 4 mm and a width such that the annulus fibrosus member **13** fits therein. The penetration path **34** has a diameter of about 2 mm.

The annulus fibrosus member **13** has an outer diameter of about 24 mm, a thinness of about 15 mm, and a height of about 20 mm. The inner cavity of the annulus fibrosus member **13** has an inner diameter of about 9 mm and is filled with silicone grease as the nucleus pulposus liquid **16**. The upper element **141** of the lower lumbar member **14**, which is corresponding to the fifth lumbar vertebra, has a height or length of about 50 mm and an outer diameter of about 33 mm. The lower element **142** of the lower lumbar member **14** has a height or a length of approximately 49 mm. The lower element **142** comprises an upper part having an outer diameter of about 56 mm and a height or a length of about 22 mm, and a lower part having an outer diameter of about 70 mm and a remaining height or length of about 27 mm.

Now, returning to FIG. **3**, the upper body member **17** has a cylindrical body with an outer diameter (D1) of about 120 mm at the upper portion **171** and a height or length of about 155 mm. The upper body member **17** is provided with a coupling protrusion **17***a* formed on its top surface to be coupled with an upper portion of a loading member, and a coupling hole **17***b* open at its bottom surface to receive the upper element **111** of the upper lumbar member **11**. The coupling hole **17***b* has an inner diameter of about 33 mm and a depth of about 35 mm. Over the height of about 80 mm from the bottom surface, the upper body member **17** has the narrowed lower portion **172** having the smaller outer diameter D2 of about 96 mm. The lower portion **172** receives the upper end portion of the abdominal/back muscle member **19** on its cylindrical outer surface.

The lower body member **18** has a cylindrical body with an outer diameter (D4) of about 120 mm at its lower portion **181** and a height or length of about 180 mm. The lower body member **18** is provided with a coupling hole **18***a* formed in its top surface to receive the lower element **142** of the lower lumbar member **14**, and threaded holes **18***b* open at its bottom surface to be engaged with bolts **24** for securely fastening the lower body member **18** to the base **20**. The coupling hole **18***a* has an inner diameter of about 70 mm and a depth of about 30 mm. Over the height from the top surface to a lower level of 80 mm down, the lower body member **18** has the narrowed upper portion **182** having an outer diameter D3 of about 96 mm. The narrowed lower portion **182** receives the lower end portion of the abdominal/back muscle member **19** on its cylindrical outer surface.

Accordingly, each of shoulders **173** and **183** has a radial height of 12 mm (=(120−96)/2), which is a radial depth of the annular groove **33** and is determined by (D1−D2)/2 or (D4−03)/2.

As described in U.S. Pat. No. 6,311,562 B1, the abdominal/back muscle member **19** can simulate the inclination of the human body following the movement of the base **20** and the recovery into a vertical standing position as an initial position. Therefore, the material, the thickness, the size, and the fixation should be selected taking into account repeatability as a key factor. Specifically, the abdominal/back muscle member **19** is made of an elastic material and adopts "multidirectional" fixation. The "multidirectional" fixation is a fixation such that, when an external force is applied to the base **20** in any direction, if the external force has the same magnitude, the inclination of the upper body member **17** is constant. Therefore, the pressure variation occurring in the liquid as the nucleus pulposus member **16** is also constant.

For example, the abdominal/back muscle member **19** comprises a structure of a silicone rubber cushion and has a thickness of 10 mm. The abdominal/back muscle member **19** has an annular cylindrical shape with the outer diameter Do of about 116 mm, an inner diameter of about 96 mm, and a length of about 210 mm. It is noted here that the abdominal/back muscle member **19** need not have the above-mentioned structure, and the size and material of the abdominal/back muscle member **19** in this invention are not limited to those specified in this paragraph.

Accordingly, the hood-like radial flange **31** has a radial space size of 2 mm (=(120−116)/2), which is determined by (D1−Do)/2 or (D4−Do)/2.

Using the sample of the human lumbar model structure, a loading test was carried out in the similar manner as described in U.S. Pat. No. 6,311,562 B1. The test result is shown in FIG. **4**. As illustrated in FIG. **4**, the pressure variation depending on loading change is constant over a range of loading force between 0–10 kg and a very good linearity. Moreover, it has less hysteresis between elevation and drop of the loading force. Particularly, it was not observed under the loading added and increased that the upper and/or lower edges of the abdominal/back muscle member **19** go over the shoulder **173** and **183** to move onto the upper portion **171** of the upper body member **17** and/or lower portion **181** of the lower body member **18**. This means that the abdominal/back muscle member **19** has an internal stress distribution uniformly. It can be understood that this caused the test results having the good linearity and no hysteresis.

Next, referring to FIGS. **3** and **5**, description will be made of an example of the process for assembling the human lumbar model structure **10** illustrated in FIG. **3** step by step.

The lower element **142**, which is provided with the pressure sensor **21** as a pressure transducer fixed therein and the upper element **141** threaded thereonto, is inserted and fixed into the coupling hole **18***a* of the lower body member **18**, which is secured onto the base **20** by bolts **24**. The cable **23** from the pressure sensor **21** is led out through the vertical guide hole **22** in the lower body member **18** outside the base **20**.

Subsequently, the annulus fibrosus member **13** is put on the upper surface or fitted into a small annulus recess in the upper surface of the lower element **142** of uper lumbar member **14** and fixed in any appropriate manner, for example, by the use of an adhesive. Thereafter, silicone grease as the artificial nucleus pulposus, i.e., the nucleus pulposus liquid **16** is fed from the above into the inner cavity of the annulus fibrosus member **13** in water.

Next, on the annulus fibrosus member **13** filled with silicone grease, the lower element **112** of the upper lumbar member **12** is mounted while the upper end of the annulus fibrosus member **13** is inserted into the annulus groove **112***b* of the lower element **112** (as shown by an arrow S1 illustrated in FIG. **5**). The annulus fibrosus member **13** is fixed to the lower element **112** of the upper lumbar member **11** in any appropriate manner, for example, by the use of an adhesive. When a pressure transducer comprising the pressure sensor **21** is screwed from the bottom of the annulus fibrosus member **13**, the silicone grease of the nucleus pulposus liquid **16** filled in the inner cavity of the annulus fibrosus member **13** rises up through the penetration path **34**

and overflows the top opening of the penetration path **34** at the same time of the pressure rise. Thereafter, the upper element **111** of the upper lumbar element **11** is fitted onto the lower element **112**.

However, air often invades into the nucleus pulposus liquid **16** when the lower element **112** is mounted in air. Any liquid such as water instead of the air may also be mixed in the pulposus liquid **16**. The invaded air may make the pressure of the nucleus pulposus liquid **16** insensitive. After waiting until a pressure of the nucleus pulposus liquid **16** decreases from high pressure to a predetermined value, the silicone grease overflown from the top opening of the penetration path **34** is removed, and the tape **30** is adhered onto the top surface of the threaded portion **112***a* to close the top opening of the penetration path **34** (as shown by an arrow S2 in FIG. **5**).

Then, the upper element **111** is fixedly mounted on the lower element **112** by threading the threaded hole **111***a* onto the threaded portion **112***a* of the lower element **112** of the upper lumbar member **11** (as shown by an arrow S3 in FIG. **5**).

Thereafter, the abdominal/back muscle member **19** (i.e., a silicone rubber ring) is tightly fitted around the narrowed upper portion **182** of the lower body member **18**. Then, the upper element **111** of upper lumbar member **11** is fitted into the coupling hole **17***b* of the upper body member **17**. At the same time, the abdominal/back muscle member **19** is tightly fitted around the narrowed lower portion **172** of the upper body member **17**. In this manner, the human lumbar model structure **10** is completed.

The human body model has been described with the cylindrical shape and specific sizes as a model in correspondence to a human body. However, even if the shape is of other than the cylindrical one or even if the total size is reduced, good measurement data can be obtained by adjusting and selecting appropriately the sizes and materials of the assembled members or elements. And those skilled in the art can readily understand these from the description of this invention.

What is claimed is:

1. A human lumbar model structure for simulating pressure applied to nucleus pulposus in the lumbar spine of a human body, said structure comprising:

a cylindrical lumbar assembly having an upper body member, an upper lumbar member, an annulus fibrosus member, a lower lumbar member, and a lower body member, which are coaxially arranged around a common center axis and which are superposed vertically from top to bottom in this order;

said upper body member comprising a first upper portion having a first diameter and a first lower portion having a second diameter smaller than the first diameter to form a first shoulder portion around the bound between the first upper portion and the first lower portion;

said lower body member comprising a second upper portion having a third diameter and a second lower portion having a fourth diameter larger than the third diameter to form a second shoulder portion around the bound between the second upper portion and the second lower portion;

said annulus fibrosus member comprising a thick cylindrical ring made of a hard elastic material and having upper and lower parts fitted into said upper and lower lumbar members, respectively, said fibrosus member having an inner cavity filled with a liquid as said nucleus pulposus;

an abdominal/back muscle member made of an elastic material in a hollow cylindrical shape, and having an upper and lower cylindrical portion fitted onto said first lower portion of said upper body member and said second upper portion of said lower body member, respectively, so that said abdominal/back muscle surrounds and tightens said lumbar assembly over a center area extending from the first shoulder portion of said upper body member to the second shoulder portion of said lower body member, said abdominal/back muscle member having an outer diameter smaller than said first diameter and the fourth diameter; and

a pressure sensor arranged along a center axis of said lower lumbar member in direct contact with said liquid as the nucleus pulposus for detecting the variation of the pressure of said liquid in said fibrous member.

2. A human lumbar model structure as claimed in claim **1**, wherein said first diameter and said fourth diameter is larger than said outer diameter of said abdominal/back muscle member sufficiently to prevent an upper edge of the upper cylindrical portion and a lower edge of the lower cylindrical portion of said abdominal/back muscle member to go over said first shoulder and said second shoulder when the vertical loading is applied to the human lumbar model structure.

3. A human lumbar model structure as claimed in claim **1**, wherein said upper lumbar member comprises an upper element fitted into a bottom surface of the first lower portion of said upper body member and a lower element fitted into a bottom surface of said upper element, the upper part of said annulus fibrosus member being fitted into a bottom surface of said lower element of said upper lumbar member, said lower element being formed with a vertical penetration path extending therethrough along a central axis connecting with the inner cavity of said fibrosus member filled with said liquid.

4. A fabricating method of the human lumbar model structure claimed in claim **3**, said fabricating method comprising steps of

tightly fitting said lower lumbar member with said pressure sensor into an upper surface of said second upper portion of said lower body member;

tightly fitting said annulus fibrosus member to said lower lumbar member;

filling the liquid as said nucleus pulposus into the inner cavity thereof;

tightly fitting the lower element of said upper lumbar member to the upper portion of said annulus fibrosus member;

making said liquid overflow from an upper opening of the penetration path of said lower element;

tightly fitting the upper element of said upper lumbar member to the lower element of said upper lumbar member,

tightly fitting the lower portion of said abdominal/back muscle member onto the second upper portion of said lower body member; and

tightly fitting said upper body member to the upper element of said upper lumbar member, while the first lower portion of said upper body member being fitted into the upper portion of said abdominal/back muscle member.

5. A fabricating method as claimed in claim **4**, after making said liquid overflow from the upper opening of the penetration path of said lower element and before tightly fitting the upper element to the lower element of said upper lumbar member, further including steps of:

confirming a pressure of said liquid at a predetermined pressure value;

removing an overflowed liquid around the top opening of said lower element of said upper lumbar member; and

closing the top opening with a tape.

* * * * *