March 31, 1970 K. D. SCHMIDT ET AL 3,503,621

FIBER GLASS SKI WITH CHANNEL CONSTRUCTION

Filed May 8, 1968

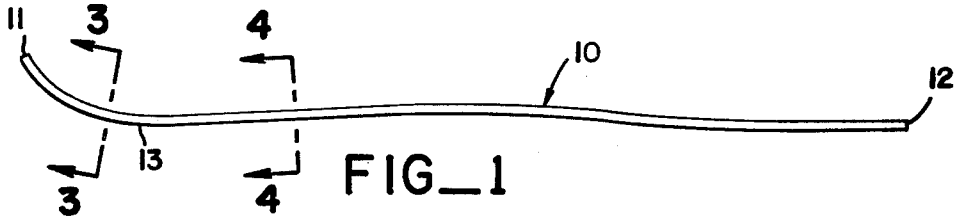

FIG_1

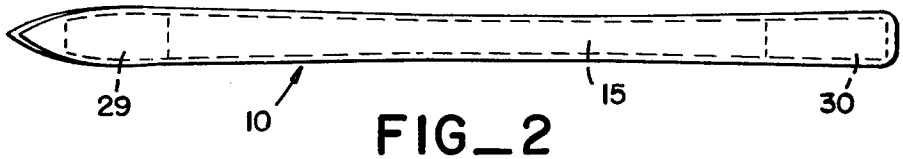

FIG_2

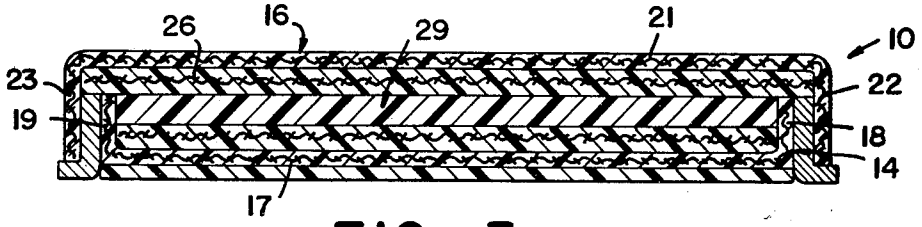

FIG_3

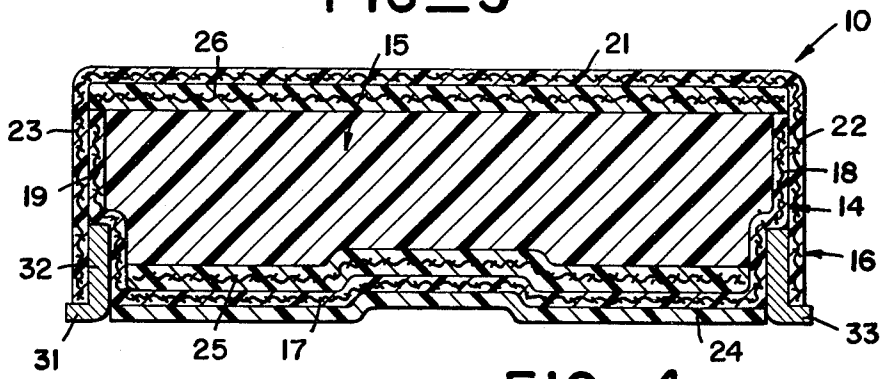

FIG_4

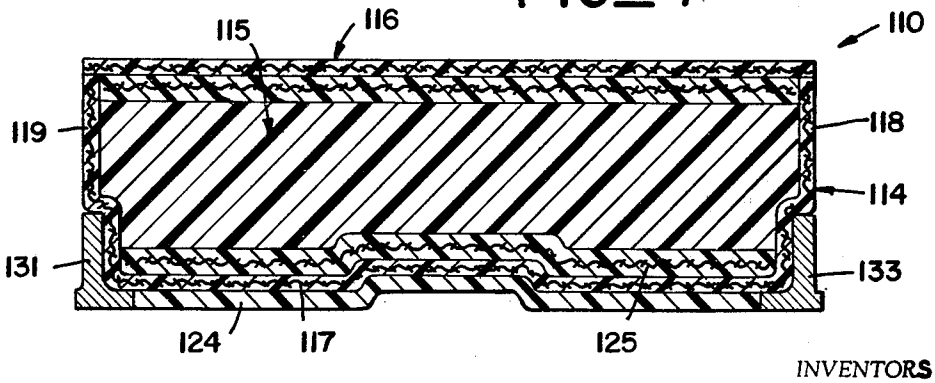

FIG_5

INVENTORS
KLAUS D. SCHMIDT
MERRITT A. ROBINSON

BY Mellin, Moore & Weissenberger
ATTORNEYS

United States Patent Office 3,503,621
Patented Mar. 31, 1970

3,503,621

FIBER GLASS SKI WITH CHANNEL CONSTRUCTION

Klaus D. Schmidt, San Francisco, and Merritt A. Robinson, San Anselmo, Calif., assignors to Kimball-Schmidt, Inc., San Rafael, Calif., a corporation of California

Filed May 8, 1968, Ser. No. 727,569
Int. Cl. A63c 5/12
U.S. Cl. 280—11.13 1 Claim

ABSTRACT OF THE DISCLOSURE

A fiber glass ski having two lengthwise members at least one of which has a molded-in camber and a U-shaped channel construction, the ski being filled with a plastic foam material. When both members are provided with a U-shaped channel construction the members are telescoped together. Steel edges can be inserted along the length of the ski with portions of said edges being disposed between the telescoped side walls of the ski members.

BACKGROUND OF THE INVENTION

At present, fiber glass skis are beginning to come into relatively wide usage. However, to the best of applicants' knowledge all of such skis are made by laminating a core material and upper and lower fiber glass shell members.

One of the most common problems with such skis is that of delamination. During normal use a ski must flex from tip to tail, placing the laminated interfaces of the skis in longitudinal shear. In many instances, the repeated flexing will cause the ski to fail along the planes of lamination.

Additionally, the laminated construction presently used makes it difficult to control the degree of camber which the finished ski is to have. Even though the individual layers of the ski will be formed with a desired amount of camber in each, when all are assembled together the final camber will not always be precisely that which is desired.

Further, all snow skis are provided with steel edge members along the length thereof, such members being generally fastened by screws to the ski. These edges are subjected to high horizontal forces tending to pull them sideways from the ski and edge failures have proven troublesome.

SUMMARY OF THE INVENTION

The above problems of fiber glass skis have been solved by the present invention in several ways.

First of all, instead of utilizing the usual lamination of flat layers of fiber glass and core material, applicants form a lower ski member of a single piece of fiber glass material having a generally U-shaped construction throughout its length, so that the side walls of the lower ski member also form the side walls of the ski. The top of the ski is then enclosed by an upper member which is bonded to the side walls of the lower member, thus forming an elongated box, in which the core material is disposed.

The shear load in the ski is then taken up by the four corner edges of the ski and the extensive contact area between the two laminates, all of which are integral with the lower ski member, thus reducing substantially the failure of the ski from normal flexure during use.

In addition, the fact that the side walls of the ski are integral with the bottom surface enables the camber to be accurately retained after molding, since the side walls will resist the tendency of the bottom surface to flatten out after molding.

The advantages above can be enhanced by molding both the upper and lower members so that they have a lengthwise channel construction. The members are telescoped together and the side walls bonded together along their length. With such construction there is no lengthwise plane of the ski in which flexure-induced shear stresses are imposed upon bonded interfaces alone.

The double channel construction has a further advantage in that it enables steel edge members to be inserted between the telescoped side walls of the ski members. The edge members are thus held from pulling away from the ski by the basic structure of the ski rather than merely by screws or other bonding means.

Other objects and advantages will become apparent in the course of the following detailed description.

BRIEF DESCRIPTION OF THE DRAWINGS

In the drawings, forming a part of this application, and in which like parts are designated by like reference numerals throughout the same,

FIG. 1 is a side elevation of a ski embodying the principles of this invention;

FIG. 2 is a plan view of a ski as shown in FIG. 1;

FIG. 3 is a cross-sectional view of the ski of FIG. 1, taken on line 3—3 thereof;

FIG. 4 is a cross-sectional view of the ski of FIG. 1, taken on line 4—4 thereof;

FIG. 5 is a cross-sectional view, similar to FIG. 4, showing another embodiment of the invention.

DESCRIPTION OF THE PREFERRED EMBODIMENT

Referring now to the drawings, and particularly to FIGS. 1–4 thereof, FIG. 1 illustrates a side view of the ski **10** having a tip or shovel portion **11** and a tail portion **12**. As is conventional, the shovel portion curves upwardly and forwardly from point **13** and the ski is curved upwardly from point **13** to the tail to give the ski its desired and necessary camber.

The body of the ski **10** is comprised primarily of three elements: the lower ski member **14**, the core **15** and upper ski member **16**. As is shown in FIGS. 3 and 4, the lower ski member has a running portion **17**, and upstanding side walls **18** and **19** which run throughout the length of the ski, thus forming a generally U-shaped channel. The upper ski member **16** has an upper portion **21** and downwardly depending side walls **22** and **23**, thus forming a generally inverted U-shaped channel which runs throughout the length of the ski.

The ski is built up as follows. A mold (not shown) having the outside configuration of the lower ski member is utilized, the mold being formed to provide the proper camber for the ski, such camber being predetermined by well-known techniques. A sole piece **24**, of Teflon, polyethylene or similar material is first placed in the bottom of the mold cavity to extend the length thereof. A mat of interwoven glass fibers is then placed in the mold cavity, such mat extending throughout the length of the mold, to form the running portion **17** and side walls **18** and **19** of the lower ski member. A layer of fiber glass rovings **25** is then disposed in the mold cavity with the rovings running from one end to the other of the mold. A thermossetting resin, such as a polyester or an epoxy resin, is applied in a conventional manner to impregnate the fiber glas material in the mold. An inner mold member (not shown) is moved into the mold cavity and heat and pressure is applied, in a conventional manner, to the materials in the mold, with such heat and pressure being applied for a length of time sufficient to set the resin and bond the sole piece **24** to the lower ski member **14**.

The upper ski member **16** is formed in the same manner. A fiber glass mat is placed in the mold cavity of a mold having a cavity shape conforming to the outer shape of the upper ski member and having a camber complementary to that of the lower ski member. The fiber glass mat extends the full length of the mold cavity. Next, a layer of fiber glass rovings **26** is disposed in the cavity with the rovings running the length of the mold. A thermosetting resin is applied to impregnate the fiber glass material and heat and pressure is applied to set the resin.

The channel formed by the lower ski member **14** is then filled with a suitable plastic foam, such as an epoxy or polyurethane foam. Preferably this is sprayed in as a liquid and after a relatively short time it will harden into a solid core of foam material **15**.

The lower ski member **14** thus formed is a one-piece member having the desired channel construction and predetermined camber molded thereinto. The side walls thereof will resist any tendency of the camber to change since they are interal with and perpendicular to the running portion of the ski member.

The foam core **15** may now be routed out to enable the solid plastic fillers **29** and **30** to be inserted in the channel of the lower ski member to achieve the desired thickness at the tip and tail of the ski. Such fillers may be made of ABS, nylon, polypropylene, or the like. Preferably the filler **29** will extend from the tip **11** of the ski to about 10–12 inches thereform, and the filler **30** will extend from the tail **12** of the ski to about 8 inches therefrom. If desired, such filler coud be put into the lower ski member channel before the foam core is put thereinto.

Suitable bonding material, such as an epoxy, is applied to the outer surfaces of the side walls **18** and **19** of the lower ski member **14** and/or to the inner surfaces of the side walls **22** and **23** of the upper ski member **16**, and the upper ski member is telescoped onto the lower ski member, as shown in FIGS. 3 and 4. A hardened edge member **31**, preferably of steel, having an L-shaped configuration, is attached to the ski by inserting the upstanding flange portion **32** between the side walls **19** and **23** of the ski members **14** and **16**. The edge member is bonded to the side walls by the bonding material thereon. Edge member **33** is similarly attached to the other side of the ski.

FIG. 5 illustrates an embodiment of the invention wherein only the lower fiber glass ski member **114** of ski **110** is formed with side walls **118** and **119** integral with the portion **117** to form a U-shaped channel. The lower ski member **114** is formed with a sole piece **124** and layer of fiber glass rovings **125** in the same manner as previously described. Similarly, the plastic foam core **115** is formed in the same manner. The upper fiber glass ski member **116** encloses the channel formed by the lower ski member and is bonded to the tops of the side walls **118** and **119** by a suitable bonding agent. Hardened edge members **131** and **133** are attached to the ski in any conventional manner.

With the foregoing ski construction, it has been found that such construction easily enables the channels to be made as thick or thin as desired, or to vary the thickness

along the length of the channels so as to provide the best flexibility of the ski, without varying the overall exterior dimension of the ski, to enable such skis to be best adapted to the particular use to which they will be put. This advantage is extremely difficult to achieve with any degree of precision in the standard laminated ski construction.

Due to the box construction of the channel-shaped members, the camber of the ski is locked in and is independent of any possible creep of the core material. Also, as previously pointed out, the shear stresses on the ski will be resisted by the integral side walls of the channel-shaped members so that lamination peel is eliminated. Particularly is this true with the double channel construction, since at no longitudinal plane is shear stress resisted solely by interface laminations. Also with the double channel construction the steel edges can be securely locked into place, since they are held against outward movement by the structural side walls **22** and **23** of the upper ski member **16**.

Having thus described our invention, we claim:

1. A ski comprising:

(a) a lower ski member formed of fiber glass material impregnated with a set resin, said lower ski member having a lower running portion and upwardly extending side walls to form a generally U-shaped channel substantially throughout its length, and said lower ski member having a predetermined camber molded thereinto along its length;

(b) an upper ski member formed of fiber glass material impregnated with a set resin, said upper ski member having an upper portion and downwardly extending side walls substantially throughout its length, said upper ski member having its side walls telescoped onto and bonded to the side walls of said lower ski member;

(c) a core of synthetic foam material filling said channel formed by said lower ski member;

(d) solid plastic filler members disposed between the upper portion of said upper ski member and running portion of said lower ski member adjacent the tip and tail of said ski.

References Cited

UNITED STATES PATENTS

2,484,141	10/1949	Alex.
2,613,660	10/1952	Bear.
2,694,580	11/1954	Head.
3,208,761	9/1965	Sullivan et al.

FOREIGN PATENTS

220,991	4/1962	Austria.
1,435,153	3/1966	France.

U.S. Cl. X.R.

161—156, 159, 170

LEO FRIAGLIA, Primary Examiner

MILTON L. SMITH, Assistant Examiner