Nov. 29, 1938. A. Y. DODGE 2,138,143

AIR CONDITIONING SYSTEM

Filed May 3, 1935 3 Sheets-Sheet 1

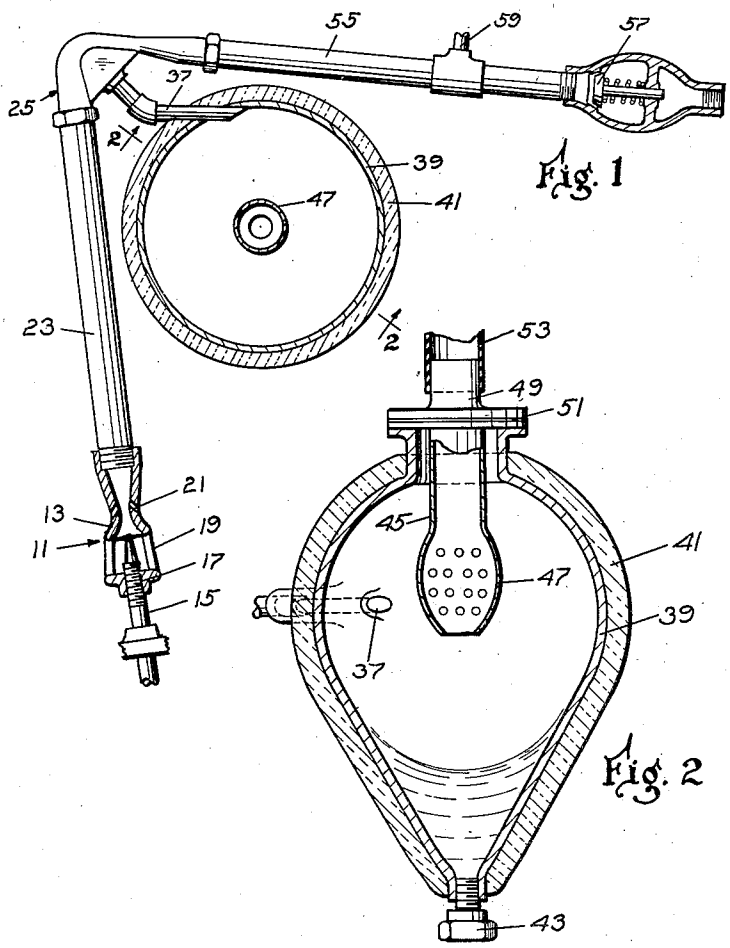


Fig. 1

Fig. 2

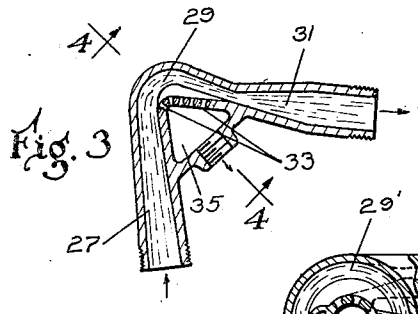


Fig. 3

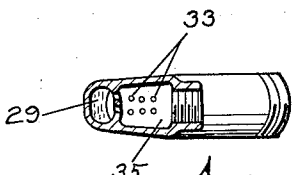


Fig. 4

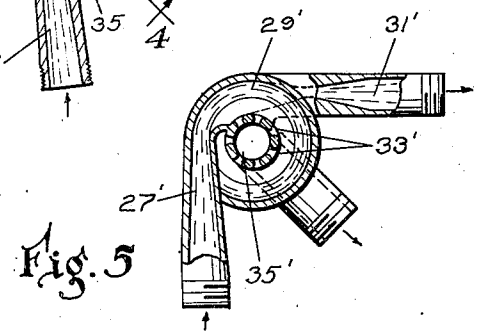


Fig. 5

INVENTOR.
ADIEL Y. DODGE
BY McConkey & Booth
ATTORNEYS.

Nov. 29, 1938. A. Y. DODGE 2,138,143

AIR CONDITIONING SYSTEM

Filed May 3, 1935 3 Sheets-Sheet 2

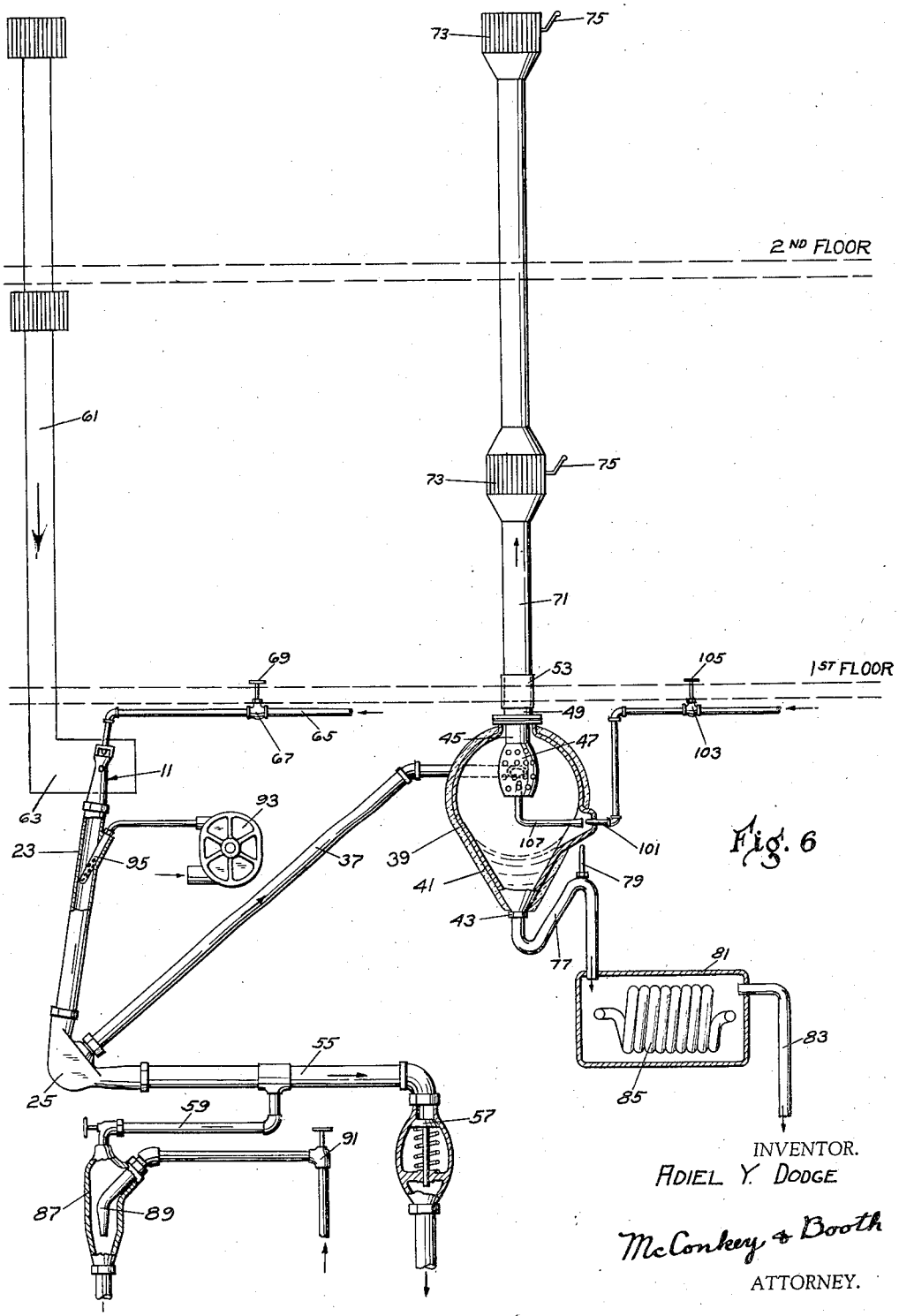


Fig. 6

INVENTOR.
ADIEL Y. DODGE

McConkey & Booth
ATTORNEY.

Nov. 29, 1938. A. Y. DODGE 2,138,143

AIR CONDITIONING SYSTEM

Filed May 3, 1935 3 Sheets-Sheet 3

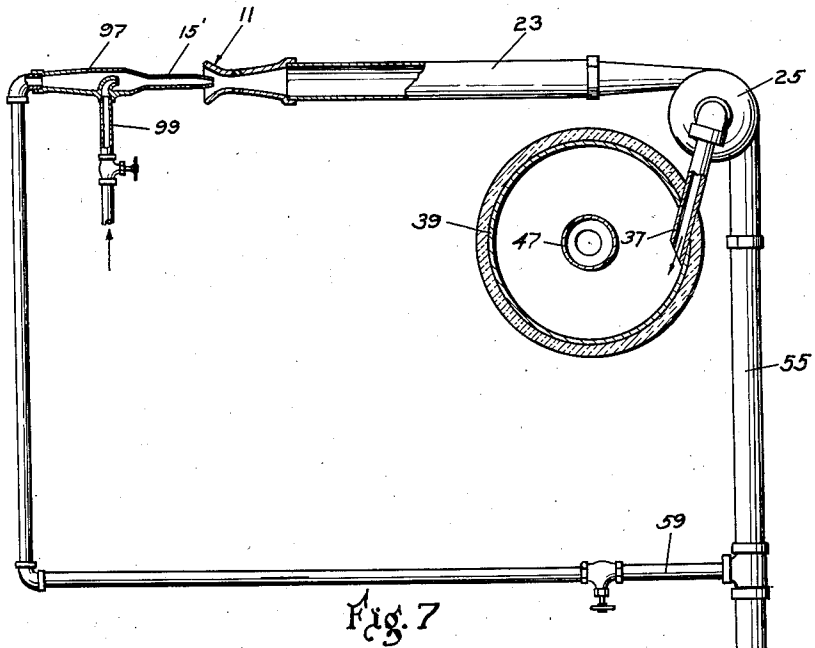


Fig. 7

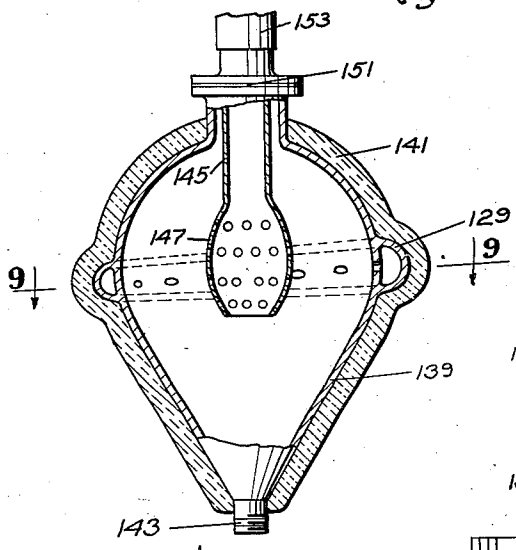


Fig. 8

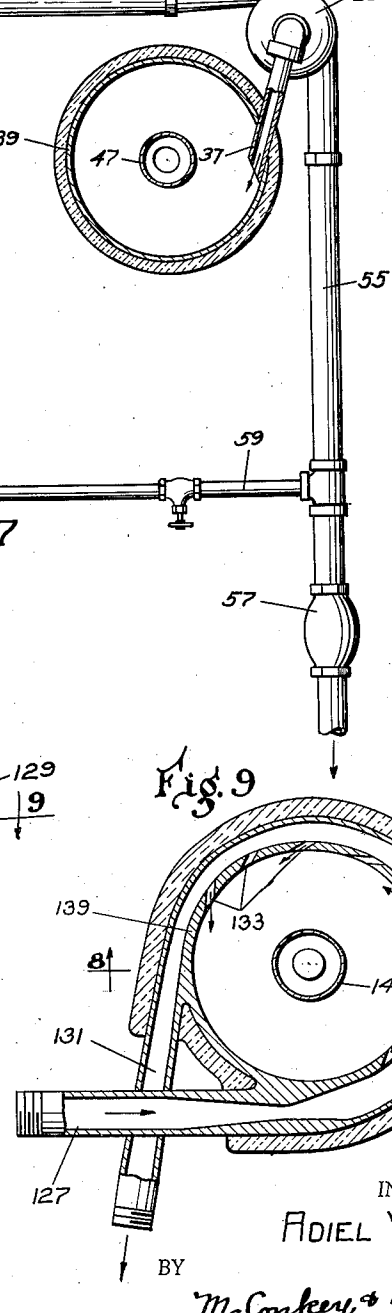


Fig. 9

INVENTOR.
ADIEL Y. DODGE

BY
McConkey & Booth
ATTORNEY.

Patented Nov. 29, 1938

2,138,143

# UNITED STATES PATENT OFFICE

2,138,143

## AIR CONDITIONING SYSTEM

Adiel Y. Dodge, South Bend, Ind.

Application May 3, 1935, Serial No. 19,538

7 Claims. (Cl. 62—138)

This invention relates to air conditioning systems and more particularly to systems for cooling and dehumidifying the air in a room.

One of the objects of the invention is to provide an air conditioning system which is operated by liquid under pressure, as for example a city water supply or the like.

Another object is to provide a system in which the air of a room is cooled, washed and dehumidified.

Still another object is to provide a system in which air may be dehumidified or humidified as desired.

A further object is to provide a water-operated air conditioning system in which the water employed to condition the air may be reused or diverted to other uses without being wasted.

According to one desirable arrangement for performing the invention there is provided a water operated injector which may use water from a city water supply to compress the air to be treated. In this way the same water serves both to compress and to cool the air and following compression the air is gradually expanded whereby its temperature will be reduced and the air and water are separated. The air is preferably partly expanded in a centrifugal dryer which removes therefrom any entrained water or condensate and from the dryer the air is conducted to the room to be conditioned. The condensate in the dryer will also be cold due to its exposure to the expanding air and may be used for cooling a supply of drinking water or the like.

The injector water separated from the air at the first stage of separation is still under considerable pressure and may be reconducted to the injector, its pressure being increased by the use of a second injector operated by city water, or may be utilized in any desired manner as for sprinkling a lawn or garden.

Other objects advantages and novel features of the invention will be apparent from the following detailed description when taken in connection with the accompanying drawings in which:

Figure 1 is a plan view with parts in section of an embodiment of the invention;

Figure 2 is a section of the dryer substantially on the line 2—2 of Figure 1;

Figure 3 is a partial section of the separator of Figure 1;

Figure 4 is a section substantially on the line 4—4 of Figure 3;

Figure 5 is a view similar to Figure 3 but showing a modified construction;

Figure 6 is a diagrammatic view of a system embodying the invention;

Figure 7 is a view of a portion of the system of Figure 6 showing a modified arrangement;

Figure 8 is a sectional view on the line 8—8 of Figure 9 showing a modified form of dryer; and

Figure 9 is a section substantially on the line 9—9 of Figure 8.

Referring more particularly to Figures 1 to 4, there is shown an air conditioning system embodying the invention constituted by an injector 11 having a venturi 13 and a nozzle 15 discharging into the venturi and connected to the injector by screw threads 17 by which it may be adjusted. The injector is provided with main air inlets 19 anterior to the venturi and auxiliary air inlets 21 adjacent the point of greatest restriction of the venturi.

The injector is connected to a pressure chamber 23 in which the air entrained through inlets 19 and 21 is compressed and in which the injector water acts to absorb the heat generated by compressing the air. From the pressure chamber the air and water flow into a separator 25 which comprises a nozzle chamber 27 in which the velocity of the mixture is increased, a centrifugal chamber 29 in which the air and water are separated and a draft tube chamber 31 in which the velocity of the discharged water is reduced and reconverted into pressure. It will be noted that in the centrifugal chamber the water is forced to the outside (see Figure 3) and the air, being lighter, is forced to the inside, suitable air outlets 33 being provided for conducting away the separated air. Air passing through the outlets 33 enters a collection chamber 35.

From the collection chamber 35 the air is conducted into the tangential inlet nozzle 37 of a centrifugal dryer wherein expansion is completed and any entrained water or condensate is removed. The dryer as shown is constituted by an ovoid shell 39 covered with suitable insulating material 41 and having the nozzle 37 projecting thereinto tangentially at its point of greatest diameter. The lower portion of the shell provides a collection chamber for separated water and has an outlet 43. An air outlet pipe 45 extends centrally into the dryer and has an air inlet comprising a perforated bulbous portion 47 to collect the dried air. The outlet pipe 45 preferably terminates at its upper end in a flange to which the flanged end of a riser 49 is connected, a screen diaphragm 51 preferably being inserted between the flanges to muffle sound. A sleeve 53 of re-

silient material such as rubber is secured to the riser 49 to connect the same to a suitable distributing conduit in a manner reducing the conductivity of noise.

Injector water flowing through the draft tube 31 flows into a discharge conduit 55 having an outlet closing by a spring pressed valve 57 which maintains a predetermined pressure in the discharge conduit. A tap-off 59 may be provided in the discharge conduit if desired to conduct the water therein to any desired point of use.

Figure 5 shows a modified form of separator, parts therein corresponding to like parts in Figure 3 being indicated by the same reference numerals primed. This separator is substantially similar to that shown in Figure 3 except that in Figure 5 the collection chamber 35' is cylindrical and the centrifugal chamber 29' extends one or more complete revolutions therearound. Thus whereas the water turns through an angle of approximately 102° in Figure 3 it may be made to turn through 450° or more in Figure 5.

Figure 6 illustrates diagrammatically a complete system for conditioning the air of a space including the apparatus of Figures 1 to 5. This view indicates two floors of a building including a return duct 61 for conducting air from the rooms to the injector 11, the injector preferably being inclosed in and taking air from an air box 63 into which the duct 61 discharges. Obviously if desired the air box 63 could be connected to receive air directly from outside or a mixture of outside air and recirculated air. The injector is supplied with water from a suitable source such as a city water pipe 65, a suitable automatic valve 67 under the control of a humidostat and/or thermostat 69 in the room being provided to control the admission of water to the injector.

The riser 49 is connected to a suitable conduit 71 through the resilient sleeve 53, the conduit having gratings 73 opening into the rooms. The gratings 73 are preferably controlled by handles 75 by which they can be adjusted to control the amount of air admitted to the rooms.

In operation of the system so far described, air from box 63 is drawn into injector 11 and compressed in pressure chamber 23, the water in the pressure chamber serving to absorb the increase in temperature due to compression and having its own temperature slightly increased thereby. The water and air are separated in separator 25, the air passing through nozzle 37 into the drier. In the drier 37 any water particles not removed from the air in separator 25 and any condensate carried by the air are removed, the cool dry air being discharged through the conduit 71 and the water particles being collected in the lower part of the drier.

The air will reach its highest compression at a point just past the throat of the injector 11 and will be cooled substantially to water temperature due to its intimate contact with water from the injector nozzle 17. As the air and water flow through the chamber 23 the air will begin to expand, energy given up by the air being expanded in accelerating the water. At this time the temperature of the air will fall below that of the water, this condition being possible because the air and water are no longer so intimately mixed and because the relatively large volume of the air compared to that of the water prevents sufficient contact of the water with the air in the time available. It will also be noted that a large part of the energy present is in the form of water velocity rather than sensible heat.

There is some further expansion of the air in separator 25, nozzle 37 and drier 39 tending to reduce the temperature of the air so that by the time the air is discharged from the drier 39 it is substantially completely expanded and is at a low temperature. It will be obvious that the temperature of the discharged air can be varied by varying the amount of compression.

The condensate and entrained water separated from the air in the drier may in some cases be quite cold due to its contact with the expanded air in the drier and may be used for any desired purpose. As shown in Figure 6 the drier outlet 43 is connected through a trap 77 having a vent 79 to a box 81, a suitable overflow 83 being provided leading to a drain or other desired point for waste water. A coil 85 is placed in the box 81 for conducting a substance to be cooled, such as drinking water.

The tap-off 59 is shown in Figure 6 as leading to an injector body 87 having a nozzle 89 therein which is connected to a hydrant 91 for increasing the pressure of the tap off water. The injector 87 may be connected to a garden hose or the like to make use of at least a part of the water flowing through the air injector 11, the remainder of the water flowing out past valve 57 to waste. If desired the water flowing out past valve 57 may be utilized for sprinkling or the like, its pressure preferably being increased by an injector operated by hydrant water. Obviously the injector 87 may be omitted and tap-off 59 may be connected directly to the point of use where a low pressure is sufficient.

It has been determined that with an injector of the type indicated at 11, one volume of water can entrain and compress about three volumes of air with good efficiency. However, due to the greater heat capacity of water than air and with a compression of the air to about three atmospheres or less this produces very little temperature change of the water to cool the air to a very considerable extent. This results in low thermal efficiency and in cooling the air far below the degree desired for normal household use. Therefore, a separate source of air under pressure is preferably provided to increase the volume of air in the pressure chamber thus producing a higher thermal efficiency and less cooling of the air. As shown in Figure 6, this separate source is constituted by a blower 93 which compresses air drawn in either from the outside as shown or from box 63 and discharges it through a nozzle 95 into the pressure chamber 23. The blower 93 may take the form shown in my copending application Serial No. 752,042 filed November 8, 1934, now matured into Patent No. 2,098,378, issued Nov. 9, 1937, in which case an additional cooling of the air is produced or it may be of any other desired type.

Figure 7 illustrates another arrangement for increasing the overall thermal efficiency by recirculating the water. In this modification the tap-off 59 is connected to a water injector 97 having a nozzle 99 connected to the city water main, the outlet of the injector 97 being connected to the nozzle 15' of the air injector 11. In operation a portion of the water in discharge conduit 55 is recirculated through pipe 59 to nozzle 15' and again through the pressure chamber 23 so that all of the water is exposed to the compressed air several times and absorbs a greater quantity of heat, thus increasing the thermal efficiency. The temperature of the water flowing out through valve 57 has been increased only a few degrees

even though it has been recirculated several times and it is accordingly suitable for sprinkling or the like. It may therefore be conducted to any desired point of use, its pressure being increased, if necessary by means of an injector, not shown.

At times, as for example during the winter months, it is desirable to increase the humidity of the air and in order to accomplish this there is provided an auxiliary injector including a water nozzle 101 supplied with water from the city main under the control of a valve 103 which is in turn controlled by a room humidostat 105. This injector aspirates air either from within the drier as shown or from the outside and discharges the mixture of water and air through a nozzle 107 which extends vertically within the lower end of outlet pipe 45. Thus the water discharged from nozzle 101 is entrained in the air passing through the riser and increases the humidity thereof. The arrangement of nozzle 107 also assists circulation through the riser. The auxiliary injector may be used either in conjunction with the remainder of the system or, in the case of heating, the drier may be connected directly to the outlet of a suitable heating plant (not shown) in which case the auxiliary injector serves to humidify the heated air circulated to the rooms.

In Figures 8 and 9 there is shown a modified form of drier adapted to take the place of both the separator and drier of Figures 1 to 7, parts in these figures corresponding to like parts in Figures 1 to 7 being designated by the same reference numerals plus 100. As shown, the centrifugal chamber 129 is formed integrally with and surrounds the drier shell 139 and communicates therewith through outlets 133 arranged to discharge tangentially into the drier. In operation air and water from the pressure chamber flow through the nozzle chamber 127 and the centrifugal chamber 129 in which the water and air are separated, the water flowing out through draft tube 131. The air in the centrifugal chamber passes through outlets 133 into the drier in which it is gradually expanded and is given a whirling motion to separate therefrom any entrained water and condensate, the cool dry air flowing out through riser 145.

While several embodiments of the invention have been shown and described it will be apparent that many changes might be made therein and it is not intended that the scope of the invention shall be limited to the forms shown or otherwise than by the terms of the appended claims.

What is claimed is:

1. An air conditioning system comprising an injector operated by liquid under pressure to compress air to be treated, a curved passage having an air outlet on its inner side to separate the injector liquid from the air and means connected to said outlet to expand the air gradually.

2. An air conditioning system comprising an injector operated by liquid under pressure to compress air to be treated, a curved passage having an air outlet on its inner side to separate the injector liquid from the air and a centrifugal drier connected to said outlet to expand the air and subject it to a further separation.

3. An air conditioning system comprising an injector operated by liquid under pressure to compress air, a pressure chamber to receive the discharge from said injector, a pump to supply additional air to said pressure chamber and means connected to said pressure chamber to separate the liquid from the air and to gradually expand the air.

4. In an air conditioning system, a pump comprising an injector operated by liquid under pressure to compress air, means for separating the liquid from the air, a discharge for liquid including means for maintaining a predetermined liquid discharge pressure, and a tap-off from said discharge ahead of said means to conduct liquid out of said system under pressure.

5. In an air conditioning system, a pump comprising an injector operated by liquid under pressure to compress air, means for separating the liquid from the air, a discharge for liquid including means for maintaining a predetermined liquid discharge pressure, and a tap-off from said discharge ahead of said means to conduct liquid out of said system under pressure, said tap-off including a liquid operated injector for increasing the pressure of said tap-off liquid.

6. In an air conditioning system, a pump comprising an injector operated by liquid under pressure to compress air, means for separating the liquid from the air, a discharge for liquid including means for maintaining a predetermined liquid discharge pressure, and a tap-off from said discharge ahead of said means to conduct liquid out of said system under pressure, said tap-off connected to the liquid inlet of said first injector.

7. In an air conditioning system, a pump comprising an injector operated by liquid under pressure to compress air, means for separating the liquid from the air, a discharge for liquid including means for maintaining a predetermined liquid discharge pressure, and a tap-off from said discharge ahead of said means, said tap-off including a liquid operated injector for increasing the pressure of said tap-off liquid, said last named injector supplying the liquid to operate said first named injector.

ADIEL Y. DODGE.