Jan. 19, 1954 L. T. WARD 2,666,667

FLUID DISPENSER

Filed April 5, 1947 3 Sheets-Sheet 1

FIG. 2

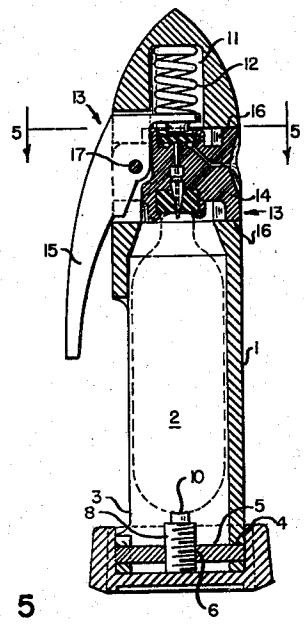

FIG. 1

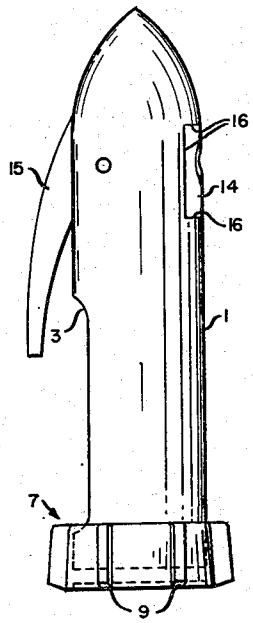

FIG. 3

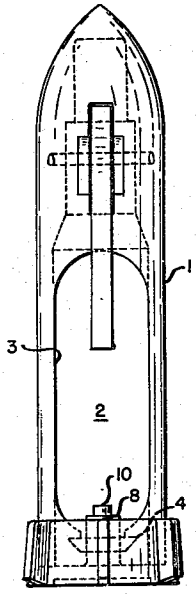

FIG. 5

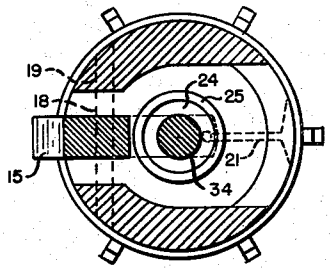

FIG. 4

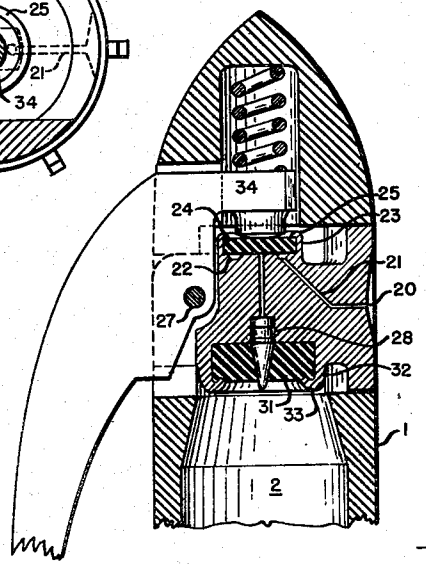

FIG. 6

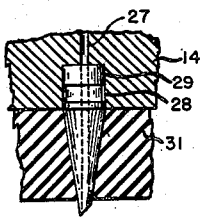

INVENTOR

Lawrence T. Ward

BY

Young & Kennedy

ATTORNEYS

Jan. 19, 1954 L. T. WARD 2,666,667

FLUID DISPENSER

Filed April 5, 1947 3 Sheets-Sheet 2

FIG. 7

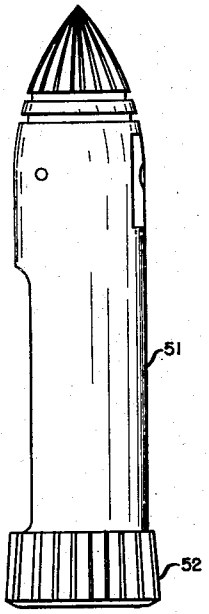

FIG. 8

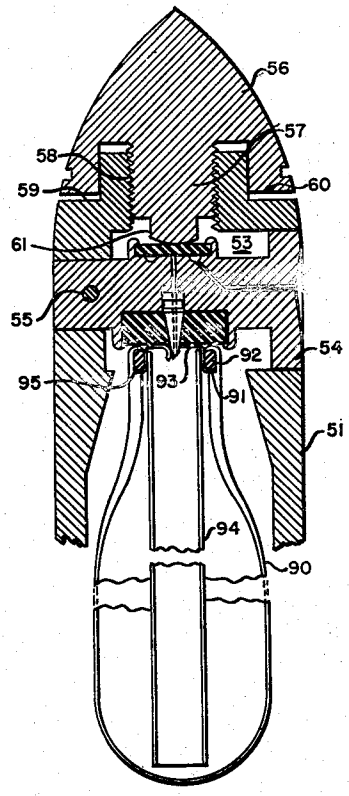

FIG. 11

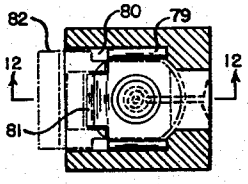

FIG. 10

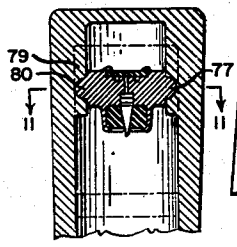

FIG. 9

FIG. 12

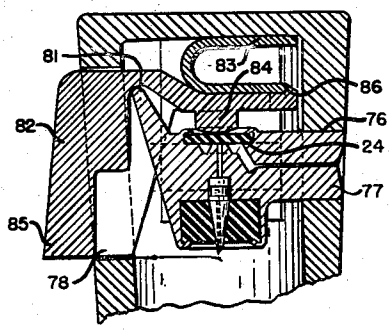

INVENTOR

Lawrence T. Ward

BY

Lange & Kennedy

ATTORNEYS

Jan. 19, 1954 L. T. WARD 2,666,667

FLUID DISPENSER

Filed April 5, 1947 3 Sheets-Sheet 3

FIG. 13

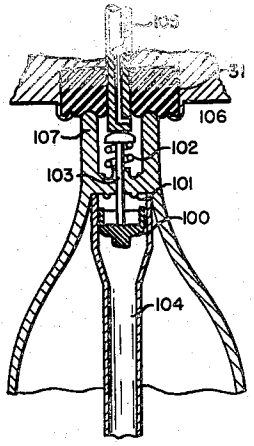

FIG. 14

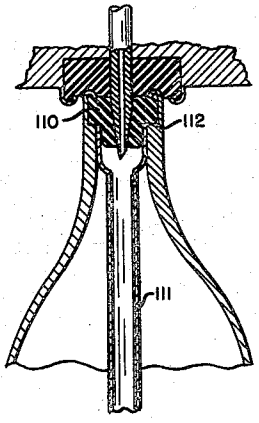

FIG. 15

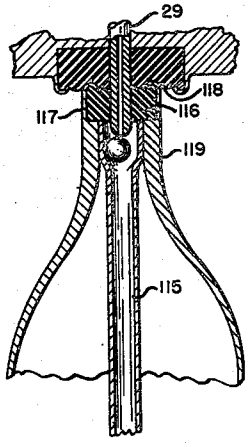

INVENTOR
Lawrence T. Ward
BY
Hauge & Kennedy
ATTORNEYS

Patented Jan. 19, 1954 2,666,667

UNITED STATES PATENT OFFICE

2,666,667

FLUID DISPENSER

Lawrence T. Ward, Philadelphia, Pa., assignor, by mesne assignments, to Charles C. Trelease, Newark, N. J., as trustee

Application April 5, 1947, Serial No. 739,637

4 Claims. (Cl. 299—95)

1

This invention relates to improvements in dispensing apparatus and more particularly in apparatus of the type in which material is dispensed as a spray or in atomized or vaporized form from a sealed capsule.

The general object of the invention is to provide an improved dispenser for use with a capsule containing material to be dispensed under pressure, and in which provision is made for piercing or otherwise opening the capsule and regulating the discharge of the contents.

With these and still other objects which will appear in the following full description in mind, the invention consists in the combinations and arrangements of parts, and details of construction, which will now first be fully described with reference to the accompanying drawing and then be more particularly pointed out in the appended claims.

In the drawing:

Figure 1 is a side elevation of a device embodying the invention in one preferred form of embodiment;

Figure 2 is a central longitudinal section of the device of Figure 1, and is taken on the line 2—2 of Figure 3;

Figure 3 is a rear elevation of the device of Figure 1;

Figure 4 is an enlarged view of the upper portion of Figure 1;

Figure 5 is a section on line 5—5 of Figure 2, and to the same scale as Figure 4;

Figure 6 is a detail view of a piercing point and associated elements of Figure 4, further enlarged;

Figure 7 is a side elevation of a modified dispensing device;

Figure 8 is an enlarged central longitudinal section showing the upper part of the device of Figure 7 and the relation of a capsule thereto;

Figure 9 is a side elevation of still another form of dispensing device;

Figure 10 is a section on the line 10—10 of Figure 9;

Figure 11 is a section on the line 11—11 of Figure 10;

Figure 12 is an enlarged section on the line 12—12 of Figure 11; and

Figures 13, 14 and 15 are fragmentary central longitudinal sections through the upper part of capsules of three different forms, and showing also the cooperation therewith of the dispenser sealing and piercing elements.

Referring now to Figures 1 to 6, the dispensing device of the invention comprises a body 1 of generally cylindrical form and defining a central

2

space 2 which is adapted to receive a capsule of generally known shape, as indicated in dotted lines in Figure 2. One wall of the body member 1 has an aperture 3 formed therein for insertion of the capsule. The base of the body member 1 is slotted, as indicated at 4, and receives a cross bar or plate 5 having a threaded central opening 6. A cup shaped member 7 fits over the lower end of body 1 and carries a centrally located screw 8, the screw 8 cooperating with the threaded opening 6. The rim of the member 7 is generally cylindrical, fitting around the body member 1, and is formed with ribs 9 to facilitate turning by the fingers. The upper portion 10 of the screw 8 serves as an abutment for forcing the capsule upwardly within the body 1 for piercing the same and holding it firmly in dispensing position.

The upper end of the body member 1 is formed with a longitudinal recess 11 for receiving a valve spring 12 and has a transverse aperture 13 for receiving the valve and nozzle block 14 and upper end of the operating lever 15. The block 14 fits within the body 1, as indicated, and is held securely therein by a close fit with the edges of the aperture 13 along the surfaces 16 and by means of pin 17 driven through apertures 18 therein and aligned apertures 19 in the body 1. The pin 17 also serves as a bearing shaft for pivotally carrying the operating lever 15.

Block 14 is formed with a nozzle opening or discharge orifice 20 communicating through passage 21 with an annular groove 22 at the top of block 14. Surrounding the groove 22 is an upstanding wall 23, whose rim 25 is turned over to hold a sealing plug or disk 24, of rubber or other suitable elastic material. The rim 25 forms an abutment or shoulder for holding the disk 24 in compressed relation to block 14 and forming a seal therewith along its periphery. The upper surface of block 14, within the groove 22, forms a valve seat 26 which cooperates with the disk 24, and the body 14 has a port at the end of inlet passage 27 extending downwardly from the center of the valve seat 26. The passage 27 opens into a recess or socket 28 which receives a piercing pin 29 having a central bore 30 forming a continuation of the passage 27. A further and enlarged socket receives a sealing disk 31, of rubber or similar elastic material, through the center of which the piercing pin passes, and which is held by the wall 32 and overturned rim 33 thereof.

The operating lever is formed with a projection 34 engaging the top of valve disk 24 and nor-

mally pressed downwardly thereagainst by spring 12 so as to force the valve disk against the seat 26 and seal off the inlet passage 27. Pressure on the lower end 35 of the handle 15 will lift projection 34 against the action of spring 12, thus unseating the disk 24 and permitting fluid to flow from inlet passage 27 into the groove 22 and thence into the outlet passage 21, from which it emerges as an atomized spray from the nozzle 20.

As best shown in Figure 6, the piercing pin 29 has a tapered end portion which extends through the sealing disk 31 for piercing a capsule and a central bore which continues the bore 27 so as to discharge fluid from a pierced capsule into the bore 27. The upper portion of the piercing pin 29 is generally cylindrical but has an annular groove. In assembly, the pin 29 is inserted into the socket 28 and the surface of block 14 surrounding the pin is struck with a staking tool so as to compress the metal of the block 14 into the annular groove of the pin 29, as indicated, for firmly holding the same.

The dispenser of the invention may be manufactured in various sizes for dispensing fluid from capsules or containers of various sizes. However, it is intended primarily for use with small capsules, which may be manufactured very inexpensively and with which it is difficult to provide self-contained valve and valve operating mechanism. In such use, the device will generally have an overall length of about four or five inches and the body 1 will be about an inch in diameter so that it is conveniently held in the fingers for operation by pressure of the thumb against handle 15. The capsule from which the liquid is to be supplied is inserted into the open space 2 with the cap 7 unscrewed so as to make room therefor and the cap 7 is then turned so as to force the capsule upwardly, by means of abutment 10, against the sealing disk 24. Sufficient pressure is exerted so as to form a pressure-tight seal between the rim of the capsule neck (see Figure 12) and the disk 31. At the same time the piercing point 29 will pierce the end of the capsule so that fluid therein may enter passage 30 at the piercing point and thus be carried through passages 27 and 21 to the discharge nozzle.

The above described design provides for inexpensive manufacture by die casting, forging and similar inexpensive quantity production methods. The capsules used will generally contain a propellent such as carbon dioxide under high pressure, which has heretofore required dispensers constructed by precision manufacturing operations. In the device of the invention, however, body 1 may be simply formed as a die casting and the valve and discharge orifice block 14 may similarly be formed as a die casting, forging or otherwise molded element. The passages 21 and 27 will be drilled therein and may be of a convenient and fairly large diameter, such, for example, as a thirty-second of an inch, the small orifice 20 being formed therein by a staking operation. In the preferred method of construction, the valve block 14, adjacent the orifice 20, will be cylindrical in the first instance, and a wire of the required diameter, a diameter of .004 or .006 being suitable for most applications, will be inserted in the opening of the discharge bore 21. A blow by a staking tool surrounding the wire produces the concavity surrounding the orifice 20, as indicated, and reduces the orifice to the required diameter. In this way, an orifice of any required size for producing the desired atomization is produced and the surface surrounding the orifice is formed so that the angle between it and the axis of the orifice, or direction in which the material is expelled, is an obtuse angle, thus reducing drip to a minimum. As before mentioned, the valve disk 24 and sealing disk 31 are assembled by merely turning over die cast or otherwise formed rims so as to compress these elements and form a peripheral seal therewith. The valve operating projection 34 is preferably convex, as shown, so as to apply its pressure to the central part of disk 24 overlying the inlet port and it will be observed that even though the pressure within the capsule and within the passage 27 may be very high, the valve operating pressure may be quite small and suitable for a finger operated device. For example, with a central bore which is one thirty-second of an inch in diameter, the pressure against the valve disk in seated position will be approximately one-tenth of one percent of the fluid pressure per square inch. Under such conditions, the device may be readily designed for holding in the fingers and operating the lever 15 with the thumb without requiring the exertion of any undue force. When the valve is closed, the spring 12 reacts against the material of the body member 1, eliminating the need for a strong supporting structure formed on the valve body member.

In the form of the invention shown in Figures 7 and 8, the body member 51 and cap 52 are similar, except as hereinafter pointed out, to the body member 1 and cap 7, previously described. A different type of valve control, however, is used, and the upper portion of the body member 51 is modified accordingly. In the construction of Figures 7 and 8, the upper portion of the body member 1 has a transverse aperture 53 for receiving the valve and orifice body 54, which fits therein and is fastened by means of a pin 55. This valve body and nozzle member is formed similarly to that previously described in connection with Figures 1 to 6, similar parts thereof being identified by similar reference numbers and accordingly will not be further described. A different form of valve control means is, however, employed, taking the form of a generally conical cap 56, grooved as indicated for providing a finger grip and having a central screw-threaded portion 57 for cooperating with a screw-threaded opening 58 formed in the end of the body 51. Around the opening 58, the body 51 is grooved or cut into a shoulder as indicated at 59 and a skirt portion 60, of cap 56, is formed to conform to the shape of this groove. When the cap 56 is rotated so as to bring the skirt 60 into contact with the base of the groove 59, further rotation is prevented and the valve disk 24 will be held in sealing relation to the valve seat 25 by means of projection 61 carried by the member 56. In this form of construction, the dispensing device will normally be held in one hand while the cap 56 is turned by the other.

Figures 9 to 12 show still a further modification. In this form of the device, the body 71 is generally square in section, the cap 72 having an upper externally threaded portion 73 cooperating with the internally threaded round lower end 74 of the body 71, and having a seat 75 for fitting against the capsule and exerting pressure thereon. In the upper end of the body 71, the apertures 76 and 78 accommodate the valve and orifice body member 77. The member 77 has lateral ribs 79, fitting in grooves 80 (Figures 10 and 11) within the body member 71, and is formed with a projection 81 which serves as a fulcrum

for the operating lever 82. A spring 83 fitting into the top of handle 82, as shown, forces projection 84 of the lever 82 down against the valve disk 24, the valve being opened by pressing on the lower end 85 of the lever. This device may be assembled by putting the spring 83 in place, and then inserting the member 77 and handle 82 through aperture 78 until the spring snaps into position, as indicated, in back of shoulder 86 on lever 82.

One form of capsule, which is suitable for use with the dispensers just described, is shown in Figure 7. The capsule body 90 has a neck which is internally grooved to form a shoulder or annular seat 91 upon which may be placed a sheet metal closure element having a peripheral flange 92 and central portion 93 forming a socket for receiving and holding the upper end of the central outlet or syphon tube 94. A rubber or similar washer 95 is placed over the flange 92 surrounding the central portion 93 and the lip of the capsule neck is turned over to compress the washer 95 and form a seal. When the capsule is placed on the dispenser, the central portion 93 of the closure element is pierced, as indicated in the drawing, connecting the discharge tube to the outlet passages. In actuality, when the capsule is pierced, the rim of the capsule neck will be pressed into the sealing disk beyond the point indicated in Figure 8, so as to form a seal therewith. This form of capsule permits use of the device in an upright position without losing the CO_2 or other propellent gas.

Other forms of capsule are shown in Figures 13 to 15. In the capsule of Figure 13, a valve member 100 seats against a surface 101 for sealing the capsule, being held thereagainst by spring 102 and the fluid pressure within the capsule. When the valve member 100 is unseated, as shown, fluid emerges between valve 100 and syphon tube 104 and round the valve stem 103, flowing upwardly through the tube 104 from the bottom of the capsule. With this form of capsule, a piercing point is not required and a valve operating member 105 having a fluid passage 106 may be substituted for the piercing point 28 previously described. The capsule is formed with a rim 107 surrounding the valve stem and forming a seal with the disk 31.

The capsule of Figure 12 employs a self sealing plug 110 of rubber or like material, of a form similar to that disclosed in Alexander application Serial No. 656,234, filed March 22, 1946, for Dispensing Liquid Chemicals. Such a plug is capable of resealing when the piercing point is removed and accordingly permits removal of the capsule from the dispenser before its contents are exhausted. The central discharge tube 111 is enlarged at its upper end to fit the neck of the capsule below shoulder 112 formed therein. The plug 110 has a lower portion fitting inside the tube 111 and an enlarged upper portion which seats on the shoulder 112. Turning over the lip of the capsule mouth compresses the plug 110 and forms the seal.

The capsule of Figure 13 utilizes a ball valve, seating against a rubber or similar closure member. In this case, the enlarged end of central tube 115 fits within the capsule neck and is surmounted by sealing plug 116 held against internal shoulder 117 by the overturned rim 118 so as to form a seal. Ball valve 119 is located in the enlarged upper end of tube 115, it being understood that the ball is of slightly larger diameter than the lower portion of tube 115 so as to remain in the upper part thereof. When the piercing pin 29 is inserted through plug 116, liquid will be discharged therethrough since ball 119 will not seat upon the pin but will move about in a random way and assume a position to one side of the pin. When, however, the pin is withdrawn, ball 119 will seat against the aperture in plug 116 accommodating the pin, and forming a secure seal. With this construction, the plug 116 may be formed of stronger material than in the embodiment of Figure 12 and need not possess the same self-sealing characteristics.

All forms of capsules used with the dispensers disclosed herein will preferably have their valve means so positioned within the neck of the capsule and the dispenser piercing or valve operating element and sealing disc will be so related to each other, that pressure of the mouth of the capsule against the sealing disc first forms a seal therewith and increased pressure thereafter opens the capsule.

What is claimed is:

1. In a dispenser of the kind described, and in combination, a valve body having a discharge passage extending therethrough, a capsule piercing element connected to one end of said discharge passage, an elastic sealing element surrounding said piercing element for sealing against the mouth of a capsule pressed thereagainst, a valve seat formed on said valve body around the other end of said discharge passage and having an outlet port spaced from said discharge passage, an elastic sealing disc upon said valve seat, the valve body comprising an upstanding wall surrounding said disc and turned over its periphery to form a seal therewith, and a manually operable valve operating member for pressing said valve disc against said valve seat adjacent the discharge passage and releasing said pressure, to control the flow of fluid to be dispensed.

2. In a dispenser of the kind described, and in combination, a valve body having a discharge passage extending therethrough, a capsule piercing element connected to one end of said discharge passage, an elastic sealing element surrounding said piercing element for sealing against the mouth of a capsule pressed thereagainst, a valve seat formed on said valve body around the other end of said discharge passage and having a groove surrounding the discharge passage and an outlet port connected to said groove, an elastic sealing disc upon said valve seat, the valve body comprising an upstanding wall surrounding said disc and turned over its periphery to form a seal therewith, and a manually operable valve operating member for pressing said valve disc against said valve seat adjacent the discharge passage and releasing said pressure, to control the flow of fluid to be dispensed.

3. A dispenser for use with pressure capsules of the type indicated comprising, in combination, a body member having a central space for accommodating a capsule and capsule holding means including means for applying pressure in a predetermined direction against the bottom of a capsule, an opening through the body member adjacent said space and extending transversely of the said direction, a valve body member seated in the said opening and held therein and having means for abutting the discharge end of a capsule and supporting the same against pressure applied by the said capsule holding means

together with means for receiving fluid from a pressure capsule held in the said space, an orifice for discharging the same and valve means for controlling said discharge, and the first said body member surrounding the said opening engaging the valve body member for supporting the same against pressure applied thereto by the said holding means through the capsule.

4. A dispenser according to claim 3, in which the said valve means comprises an elastic sealing disc carried by said valve body and operating means therefor including valve closing means reacting against the said dispenser body member.

LAWRENCE T. WARD.

References Cited in the file of this patent

UNITED STATES PATENTS

Number	Name	Date
1,614,532	Mobley	Jan. 18, 1927
1,742,605	Lemoine	Jan. 7, 1930
1,920,165	Andvig	Aug. 1, 1933
1,961,371	Mapes	June 5, 1934
1,993,727	Adam	Mar. 12, 1935
2,098,454	Kelley	Nov. 9, 1937
2,160,043	Threm	May 30, 1939
2,167,866	Bennett	Aug. 1, 1939
2,169,142	Stebbing	Aug. 8, 1939
2,208,490	Axtell et al.	July 16, 1940
2,303,130	Moon	Nov. 24, 1942
2,325,008	Gruett	July 20, 1943
2,335,312	Rotheim	Nov. 30, 1943
2,343,276	Carlson	Mar. 7, 1944
2,362,784	Ward	Nov. 14, 1944
2,367,077	Ward	Jan. 9, 1945

FOREIGN PATENTS

Number	Country	Date
793,007	France	Nov. 7, 1935