March 28, 1961 S. SIMETI ET AL 2,976,553

MOP

Filed Jan. 21, 1960

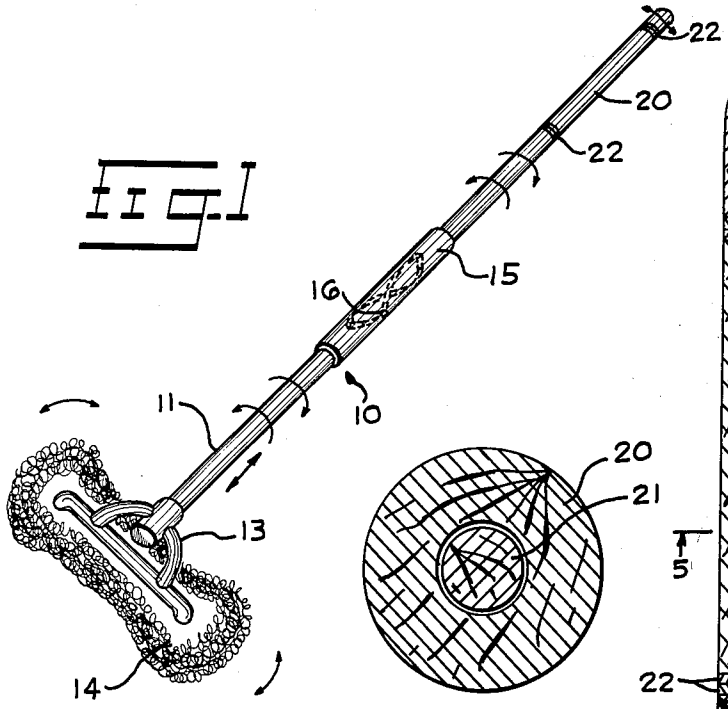

FIG. 1

FIG. 5

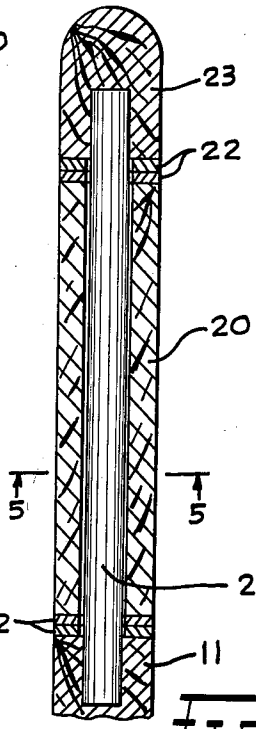

FIG. 2

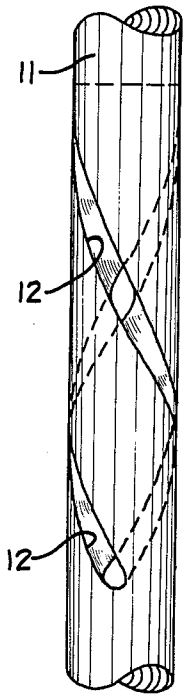

FIG. 3

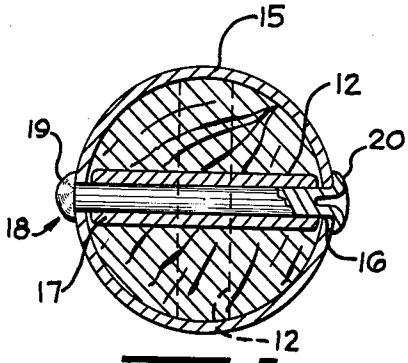

FIG. 4

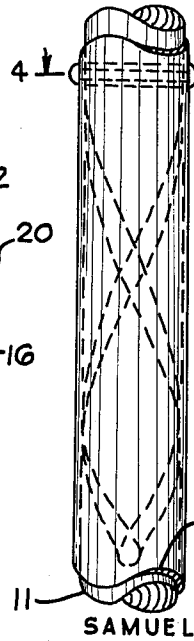

INVENTORS

SAMUEL SIMETI

JOHN VITKEVICH

BY Frank Makovo

ATTORNEY

United States Patent Office

2,976,553

Patented Mar. 28, 1961

1

2,976,553

MOP

Samuel Simeti, 41 Ave. I, Farmingdale, N.Y., and John Vitkevich, 57 Gridley St., West Islip, N.Y.

Filed Jan. 21, 1960, Ser. No. 3,837

2 Claims. (Cl. 15—147)

This invention relates to a cleaning mop.

It is an object of this invention to provide a mop adapted to be easily freed of pick-up debris by centrifugal rotation of the mop head.

It is another object to provide a mop having a manually rotated mop head.

It is a further object to provide a sturdy mop of a fool-proof and inexpensive construction.

These and other objects of this invention will become apparent upon reading the following descriptive disclosure taken in conjunction with the accompanying drawing in which—

Fig. 1 is a perspective view of the mop showing the rotatable mop head fixedly secured to a mop handle,

Fig. 2 is a view of the mop handle, broken away in part, showing a sleeve mounted upon the handle over a spiral groove and further showing a hand element rotatably mounted at the end of the handle opposed to the mop head,

Fig. 3 is a view of the spiral groove in the handle,

Fig. 4 is a view taken on line 4—4 of Fig. 2 and showing the sleeve securing pin and the roller thereon disposed in the handle groove, and

Fig. 5 is a view taken on line 5—5 of Fig. 2 and showing the manner of disposing the handle element rotatably on a dowel fixed in said handle.

Turning to the drawing, a mop **10** is provided with a mop handle **11** having a suitable spiral slot or groove **12** therein. The spiral groove **12** is of suitable length and preferably of about 270 degrees of spiral. The handle **11** is solid and preferably made of wood or plastic.

The groove **12** is cut into the handle **11** by conventional means. The handle **11** is secured fixedly to a metal bridge element **13** which in turn is fixedly secured in the mop head **14**.

A sleeve **15** preferably of metal and of suitable length and diameter is slipped onto the handle **11** and over the groove **12**.

The sleeve **15** is provided with a pair of suitable apertures in its middle, said apertures being disposed in a diametrically opposed relationship. A tubular roller collar **17** is first disposed in the groove **12** and the sleeve **15** is then suitably slipped over the groove and the collar **17** therein so that the apertures **16** of the sleeve mate with the hole in the collar **17**. A suitable rivet pin **18** having a firm head **19** is then inserted into the sleeve apertures and collar hole and then peened over to form a rivet head **20**, thereby holding the sleeve **15** and pin **18** with the collar **17** thereon captively relative to said groove **12**.

The sleeve **15** is preferably a bit longer than twice the length of the groove **12** so that the sleeve **15** covers the groove **12** at all times.

A tubular handle element **20**, preferably made of wood, is provided on the outer end of the handle and away from the mop **14**.

To effect rotation of the handle **11** a wooden dowel pin **21** of suitable length is disposed in a suitable cavity in the

2

top end the handle **11** and fixed therein by adhesive. Next a pair of suitable metal washers **22** are disposed upon the dowel pin **21** and the handle element **20** is then slipped onto the pin **21** and the washers **22**. Then another pair of washers **22** are added upon dowel pin **21** on top of the handle element **20**. Lastly a wooden cap **23** having a suitable central cavity therein is fixedly secured to the top end of the dowel pin (Fig. 2) by the use of suitable adhesive or otherwise.

As shown in Fig. 5, the handle element is rotatably mounted upon the dowel pin **21**. In practice the handle element **20** is firmly held in one hand and the dowel pin **21** fixedly secured to handle **11** is rotated as a unit along with cap **23** which is also fixed to said dowel pin.

The use of the pairs of metal washers **22** reduce frictional resistance. However the device is operable without said washers **22**.

In operating the device of this invention the sleeve is held in one hand and the handle element **20** in the other. Movement of the handle element **20** toward and away from the sleeve **11** a distance equal to the straight linear length of the groove **12** causes the mop handle **11** and mop **14** thereon to rotate clockwise and counterclockwise thereby flinging off any dust adhering to said mop head **14**.

The handle element **20** during the above operation does not rotate but the dowel pin **21** therein does rotate along with cap **23**.

It is thus seen that the use of this invention does away with the need for shaking a mop so that the mop head **14** may be cleaned, if desired, by inserting it into a suitable large stationary bag or container. Thus the use of applicants' invention avoids air pollution caused by shaking dust mops out of apartment house windows.

This invention has been described by means of an illustrative embodiment but it is not limited thereto as it includes the collar **17** being rotatably mounted on rivet pin **18**.

We claim:

1. A cleaning mop consisting essentially of a solid mop handle having substantially in the center of said handle a spiral slot therethrough of suitable length, a tubular sleeve of substantially twice the slot length slidably disposed over said handle slot, said sleeve having a pair of diametrically opposed apertures centrally located in said sleeve, a tubular roller collar disposed in said slot with the hole of the collar in line with the apertures of said sleeve, a rivet pin disposed through said pair of apertures in said sleeve and said tubular collar securing said sleeve and said collar to said handle, a dowel pin fixedly secured to the top end of said handle, a tubular handle element rotatably mounted on said dowel pin, a cap having a cavity therein fixedly secured to the other end of said dowel pin, a mop retaining bridge element secured to the other end of said handle and a mop head secured to said bridge element whereby seizure of said rotatable handle element in one hand and seizure of the sleeve in the other with movement of the handle element toward and away from said sleeve effects rotation clockwise and counterclockwise of said mop head, mop handle and dowel pin with the cap thereon.

2. The cleaning mop of claim 1 wherein the spiral slot has a turning angle of about 270 degrees and comprising a pair of washers below and above said rotatable handle element.

References Cited in the file of this patent

UNITED STATES PATENTS

1,120,813	Harbian	Dec. 15, 1914
2,660,745	Yusko	Dec. 1, 1953
2,944,431	Dexter	July 12, 1960