Sept. 9, 1930. A. J. JACKMAN ET AL 1,775,396

REFRACTORY BRICK

Filed May 31, 1928

Fig. 1.

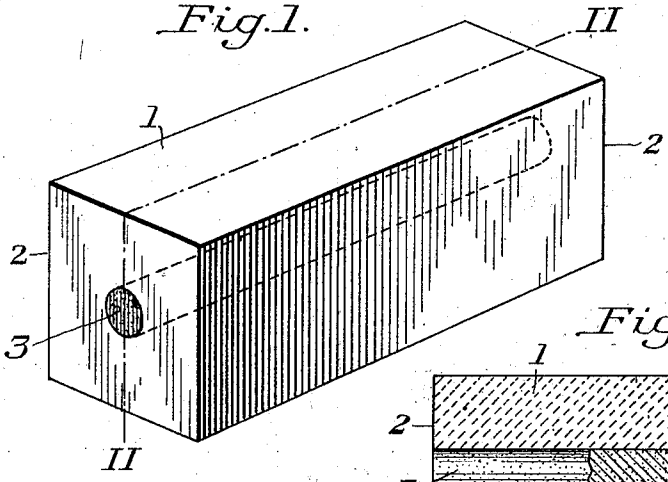

Fig. 2.

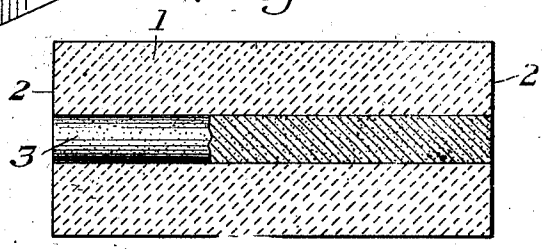

Fig. 3.

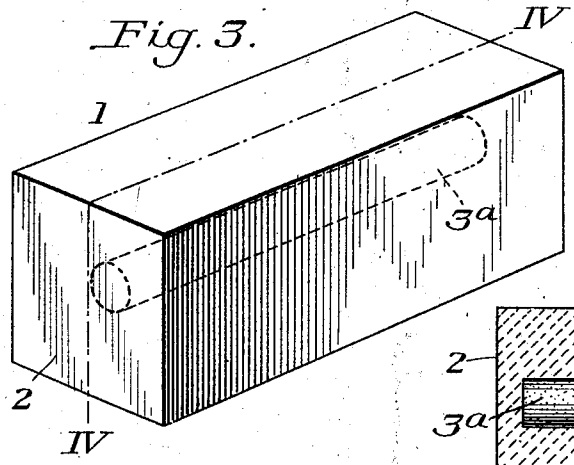

Fig. 4.

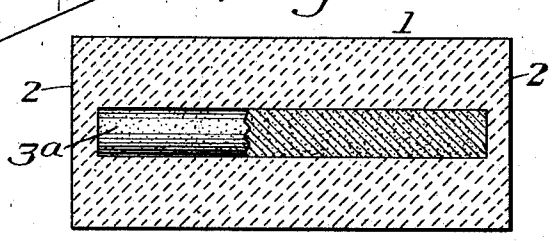

Fig. 5.

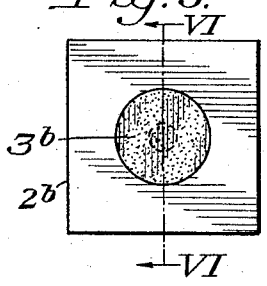

Fig. 6.

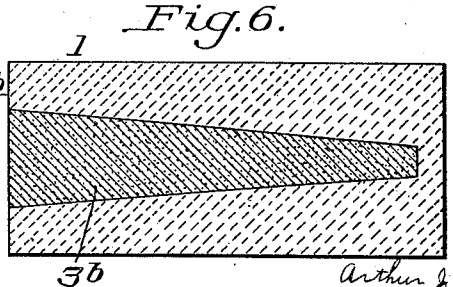

INVENTORS
Arthur J. Jackman
Charles L. Jones
by their Attorneys
Byrnes, Stubbins & Parmelee

Patented Sept. 9, 1930 1,775,396

UNITED STATES PATENT OFFICE

ARTHUR J. JACKMAN, OF FOREST HILLS BOROUGH, AND CHARLES L. JONES, OF PITTSBURGH, PENNSYLVANIA, ASSIGNORS TO VESUVIUS CRUCIBLE COMPANY, OF SWISSVALE, PENNSYLVANIA, A CORPORATION OF PENNSYLVANIA

REFRACTORY BRICK

Application filed May 31, 1928. Serial No. 281,636.

The present invention relates to refractory brick and more especially to refractory brick for use in furnace linings. Refractory brick such as silica brick, fireclay brick, chrome brick, etc., are used extensively for linings of various furnaces. It is common knowledge that refractory brick of this kind when subjected to long exposure to heat or to intermittent heating and cooling break off and spall at their faces which are exposed to the heat of the furnace chamber. The brick usually break off or spall along planes which are generally parallel to their exposed faces. Spalling has been attributed to various causes, such as to thermal stresses and to physical changes in structure which occur in heating, such for example, as the change in crystalline structure of a silica brick from quartz to cristobalite, when exposed to high heat for a considerable period of time. The bricks, when built into a furnace lining, such as that of the furnace wall or roof, are laid side by side so that one face of the brick is exposed to the heat of the furnace chamber.

Refractory brick of the kind referred to above have relatively poor heat-conducting capacity, so that there is a relatively steep temperature gradient from the face of the brick into its body. Since the brick are built into a wall or roof, the isothermal planes in a brick are substantially parallel to the exposed face of the brick. In spalling, the clevage planes in general tend to run along the direction of the isothermal planes, permitting the exposed face to spall or break off. The changes in crystalline structure in the brick take place from the face of the brick back into the body of the brick. When a change in the crystalline structure takes place, as for example, the change from quartz to cristobalite in a silica brick, the change begins at the face of the brick and progresses in toward the main body of the brick, so that the plane or planes which define the border line between the advancing crystalline change and the body of the brick will lie substantially as do the isothermal planes; that is, generally parallel to the face of the brick. These planes of demarkation between the crystalline materials of different character tend to form a cleavage plane along which the spalling or cracking tends to occur.

We have found that the spalling of refractory brick may be prevented and minimized when the brick are used for furnace linings, by forming a composite brick in which a refractory non-metallic element of relatively good heat-conducting materials is combined with the body of the brick which is of relatively poor heat-conducting material.

The heat-conducting elements are preferably made in the form of rods which lie in a direction generally normal to the exposed surface of the brick so as to conduct the heat from the exposed surface into the body of brick and into the wall. These heat-conducting rods serve to conduct and diffuse the heat into the body of the brick and flatten out the temperature gradient which would otherwise be steep in the material of the brick near its exposed face. They therefore minimize the thermal stresses. The conducting rods also change the shape of the isothermal planes from flat planes lying parallel to the exposed face of the brick into generally conical surfaces surrounding the rods. Since the cleavage planes due to thermal stresses and to changes in crystalline structure lie along isothermal planes, these cleavage planes are likewise changed from flat planes parallel to and near the exposed faces of the brick, into planes of a generally conical shape surrounding the rods and extending well into the body of the brick. Therefore, if cracking should occur along such planes, there is less liability of the falling away of the material, since a piece of material of generally conical shape which extends well into the body of the brick will resist separation and spalling off much better than a plate of such material having a cleavage plane behind it parallel to and near the exposed face of the brick.

In the accompanying drawings, we have shown three illustrative examples of composite refractory brick embodying our invention. In the drawings:

Figure 1 is a perspective view of one form of brick embodying our invention;

Figure 2 is a section along the line II—II of Figure 1;

Figure 3 is a perspective view of a modification;

Figure 4 is a section along the line IV—IV of Figure 3;

Figure 5 is an end view showing still another modification; and

Figure 6 is a section along the line VI—VI of Figure 5.

Referring to the embodiment of the invention illustrated in Figure 1, reference numeral 1 indicates the body of the brick which may be of fireclay or silica or any other of the usual materials employed for refractory bricks and which are, in general, of relatively poor heat-conducting capacity. Either of the end faces 2 of the brick are intended to form the exposed face of the brick as it is laid in the furnace lining. A rod 3 of relatively good non-metallic heat-conducting material is embedded in the brick, and as shown in Figure 1, extends from the exposed face of the brick through to the other side of the brick.

The embodiment of the invention illustrated in Figures 3 and 4 is similar to that shown in Figure 1, except that the conducting rod 3^a does not extend to the outside of the face of the brick, but terminates at a point within the brick but near the face thereof, so that the face of the brick is formed of the body material of the brick. This is of advantage in some cases where the furnace gases might attack the material of the heat-conducting rod.

In the embodiment of the invention illustrated in Figures 5 and 6, the heat-conducting rod 3^b is of a generally conical shape. The face 2^b of the brick is the face which is intended to be exposed at the inside of the furnace lining. The conical shaped conducting rod 3^b has an advantage in certain instances as it will tend to lock the brick material which surrounds it at the exposed face of the brick and prevent the material from falling into the furnace in case cracking should occur.

While we have shown three illustrative examples in the drawings, it is to be understood that the invention is not limited to the illustrated forms, but may be embodied in other forms of bricks and other forms of heat-conducting elements. For example, the bricks may be made in various shapes other than the usual rectangular brick shapes, and we intend the term "brick" to include various shapes. Similarly, the conducting elements or rods may be made of round cross section, rectangular cross section, or irregular cross section, or may be made of various irregular shapes, depending upon the form of the brick. Also, more than one conducting element may be combined in a single brick, depending upon its size and shape and upon the size of the conducting elements. While in the illustrated examples the conducting elements are shown as rods which are embedded in the body of brick, the conducting elements may be otherwise combined with the bricks, as for example, they may be applied to the faces of the bricks, since their function is to conduct or transfer the heat into the refractory wall, and such function is not dependent upon any particular arrangement of the conducting elements, although the conducting elements will, in general, extend back from the exposed face of the brick.

The volume of the heat-conducting element or elements will, in general, be somewhat less than that of the volume of the body material of the brick, usually in the neighborhood of from 15 to 20% of the body material of the brick, although this may vary, depending upon different conditions, such as the thermal conductivity of the material of the brick body and the thermal conductivity of the conducting elements. The better the heat conductivity of the conducting elements, the smaller they may be made. Also, in general, the poorer the heat conductivity of the brick material, the larger the size of the heat-conducting elements.

It is usually desired that the refractory furnace wall shall not conduct too much heat, and for this reason, it is preferable to have the greater part of the wall made up of the relatively poor heat-conducting material of the bricks themselves. Also the material of the heat-conducting elements is usually more expensive than that of the brick material, and for motives of economy, the size of the conducting elements is made no larger than necessary in order to prevent or minimize the spalling.

The heat-conducting elements or rods are made of a non-metallic refractory material of better heat conductivity than that of the body of the brick. We have found that a satisfactory material for this purpose is a mixture of silicon carbide and graphite bonded with a clay bond. A mix containing about 15% of fine granular silicon carbide, about 40% of graphite and about 45% of bonding clay makes a satisfactory conducting rod for use in ordinary fireclay bricks.

The composition of the conducting elements or rods may be varied according to the heat conductivity desired. An increase in the amount of silicon carbide and graphite tends to increase the heat conductivity while an increase in the amount of bonding clay tends to decrease it. While we prefer to use a mixture of silicon carbide and graphite, either of them alone may be used with the clay bond or other good non-metallic refractory heat-conducting materials may be used in their place.

In making up a composite brick, we have found a satisfactory procedure to be as follows:

The bricks are first molded to shape with

rod-receiving holes in them, and are then air-dried. The refractory rods are molded and air-dried and are then inserted in the holes in the brick. The composite brick thus assembled is burned or fired in the usual way, which will tend to bond and consolidate the refractory rod with the bonding material of the brick. The composite bricks may, however, be made otherwise. For example, the rods may be preformed and the brick material molded around them, and the bricks air-dried and burned in the usual way. Or the bricks may be molded, air-dried and burned; and preformed and likewise air-dried and burned conducting rods may be inserted and cemented in place with a suitable grout.

The shrinkage of the material of the conducting rods during the air drying and firing of the brick may be controlled by the character and amount of the bonding material employed in such rods, and can be regulated to coincide with the shrinkage of the brick material so that there will be little, if any, tendency to cause rupture of the composite brick by uneven shrinkage of its parts.

As is well known to those skilled in the art of making refractories, the shrinkage of various bonding refractories, such as silica brick, fireclay brick, chrome brick and silicon-carbide-containing materials, may be regulated by the character and amount of the bonding material used, such as a bonding clay. In making up the refractory rods, material such as a bonding clay will be selected and used in proper amount so as to give to the rods substantially the same shrinkage as that of the body of the brick. Any of the well known bonding materials other than clay may, of course, be used, such as tarry bonds which are burned in the material.

The non-metallic heat-conducting materials, such as silicon carbide and graphite, are highly refractory. They will melt as metal will melt, nor have a tendency to change their character even under intense heat. By shielding the faces of the conducting rods at the exposed faces of the brick, the conducting rods may be shielded from furnace atmospheres which would affect them, and a furnace lining be formed which, so far as the influences in the furnace chamber are concerned, is the same as that of brick formed entirely of the usual brick material. The use of the heat-conducting elements of the composite brick, however, minimizes the spalling of the exposed faces of the brick to a great degree, and the life of the furnace lining is much increased. We have also found that the heat-conducting rods when embedded in the brick permit a better and more uniform burning of the composite brick because they facilitate the heat penetration during the burning of the brick.

While we have illustrated and described the preferred embodiment of our invention, the invention is not so limited, but may be otherwise embodied within the scope of the following claim.

We claim:

A composite brick comprising a body of relatively poor heat-conducting refractory material having embedded therein a rod of relatively good heat-conducting non-metallic refractory material extending in a direction generally normal to the face of the brick which is to be exposed to furnace heat.

In testimony whereof we have hereunto set our hands.

ARTHUR J. JACKMAN.
CHAS. L. JONES.