US 20080265046A1

(19) United States

(12) Patent Application Publication

(10) Pub. No.: US 2008/0265046 A1

(43) Pub. Date: Oct. 30, 2008

Grimes

(54) TANKLESS WATER HEATER HOT WATER RETURN SYSTEM

(76) Inventor: **Rich Grimes**, Orlando, FL (US)

Correspondence Address:
**DONALD W. MEEKER**
**924 EAST OCEAN FRONT, # E**
**NEWPORT BEACH, CA 92661 (US)**

(21) Appl. No.: **12/107,824**

(22) Filed: **Apr. 23, 2008**

**Related U.S. Application Data**

(60) Provisional application No. 60/913,998, filed on Apr. 25, 2007, provisional application No. 60/914,001, filed on Apr. 25, 2007.

**Publication Classification**

(51) **Int. Cl.**
*F24D 3/08* (2006.01)

(52) **U.S. Cl.** ..... **237/19**

(57) **ABSTRACT**

A tankless return hot water return system to facilitate whole-house or whole-building hot water return recirculation used in conjunction with tankless water heaters. The system is designed to compensate for tankless head losses and to protect the tankless heat exchanger. The system has a hot water return by-pass for heat exchanger protection. The invention utilizes the tankless water heater as the heating source for the hot water return and eliminates the need and use of tank-type water heaters for tankless hot water return recirculation. The system is self-contained with built-in temperature sensing and does not require any auxiliary controls, sensors, switches, timing mechanisms or remote activation. The system is energy efficient and water conservative.

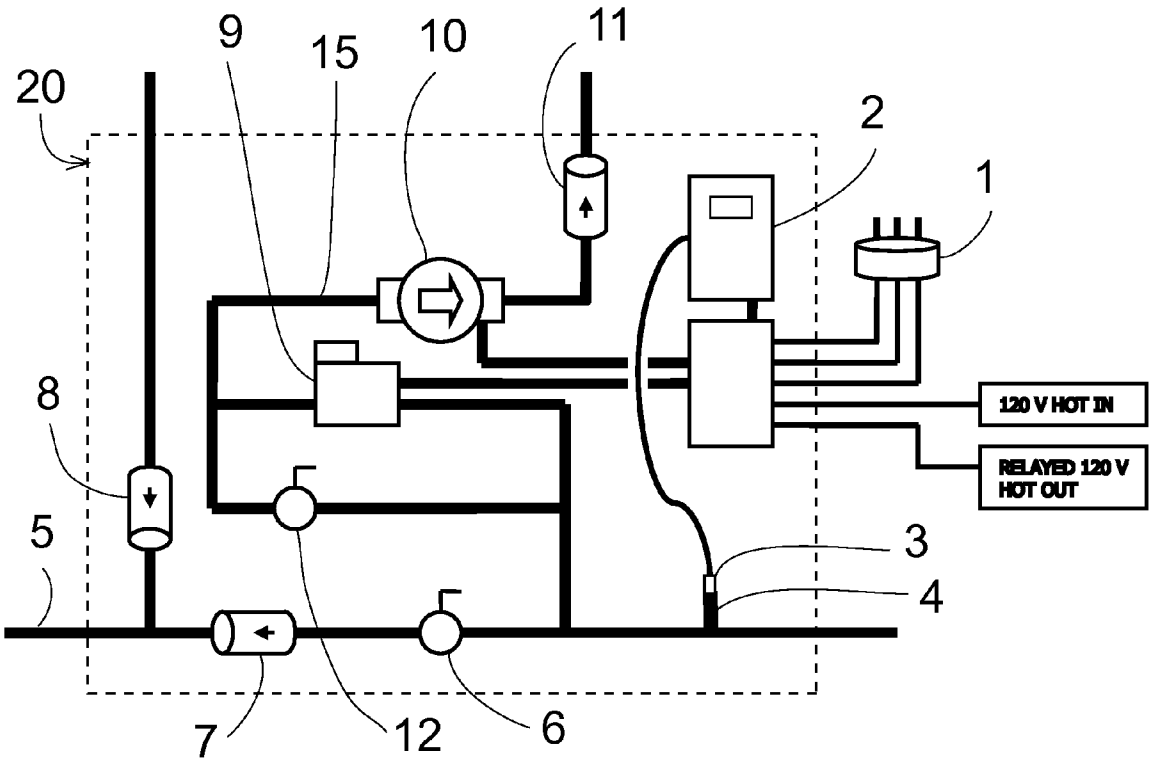

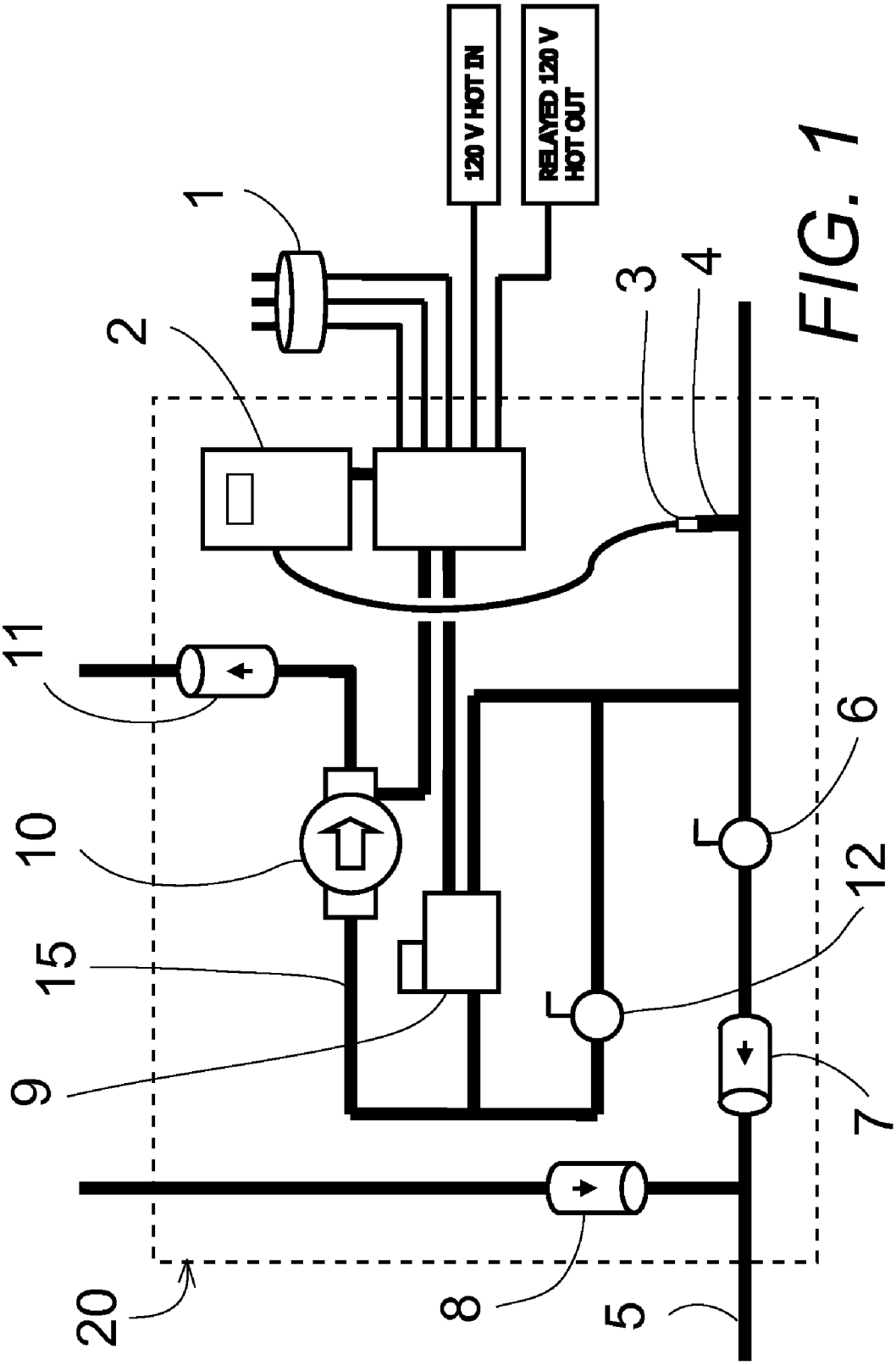


FIG. 1

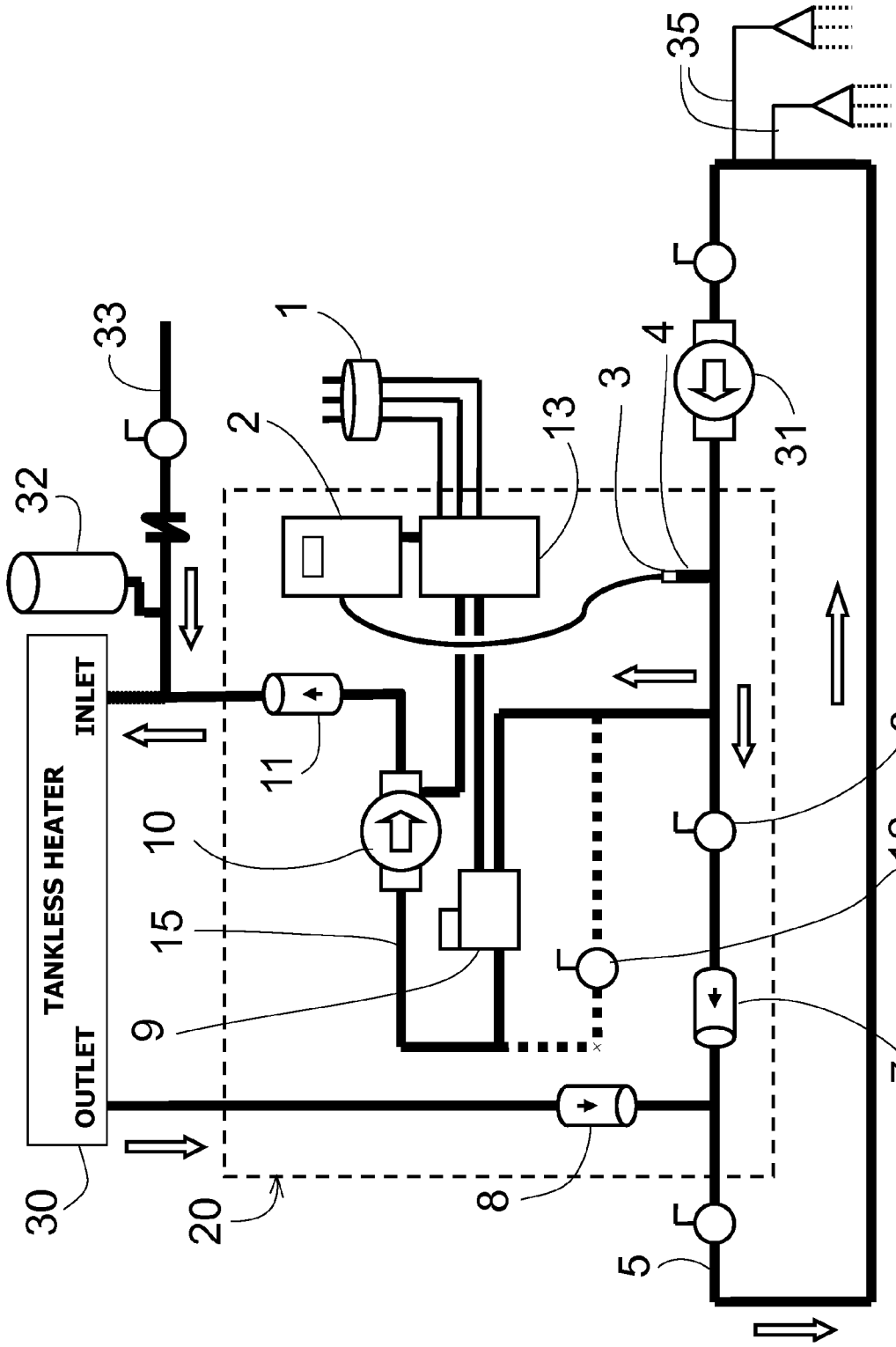
TANKLESS HEATER
INLET
OUTLET
1
2
3
4
5
6
7
8
9
10
11
12
13
15
20
30
31
32
33
35

FIG. 2

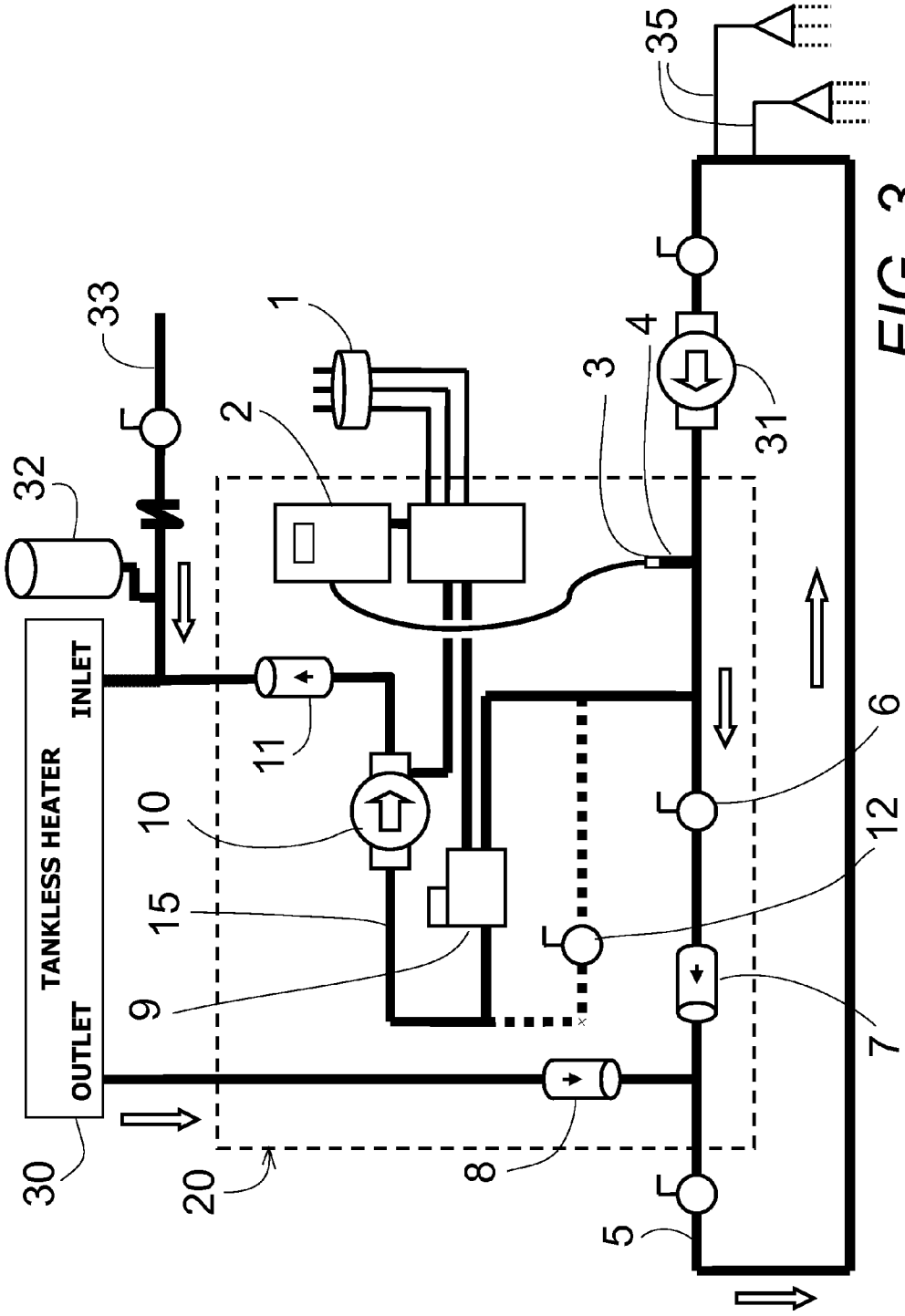
TANKLESS HEATER
INLET
OUTLET
1
2
3
4
5
6
7
8
9
10
11
12
15
20
30
31
32
33
35

FIG. 3

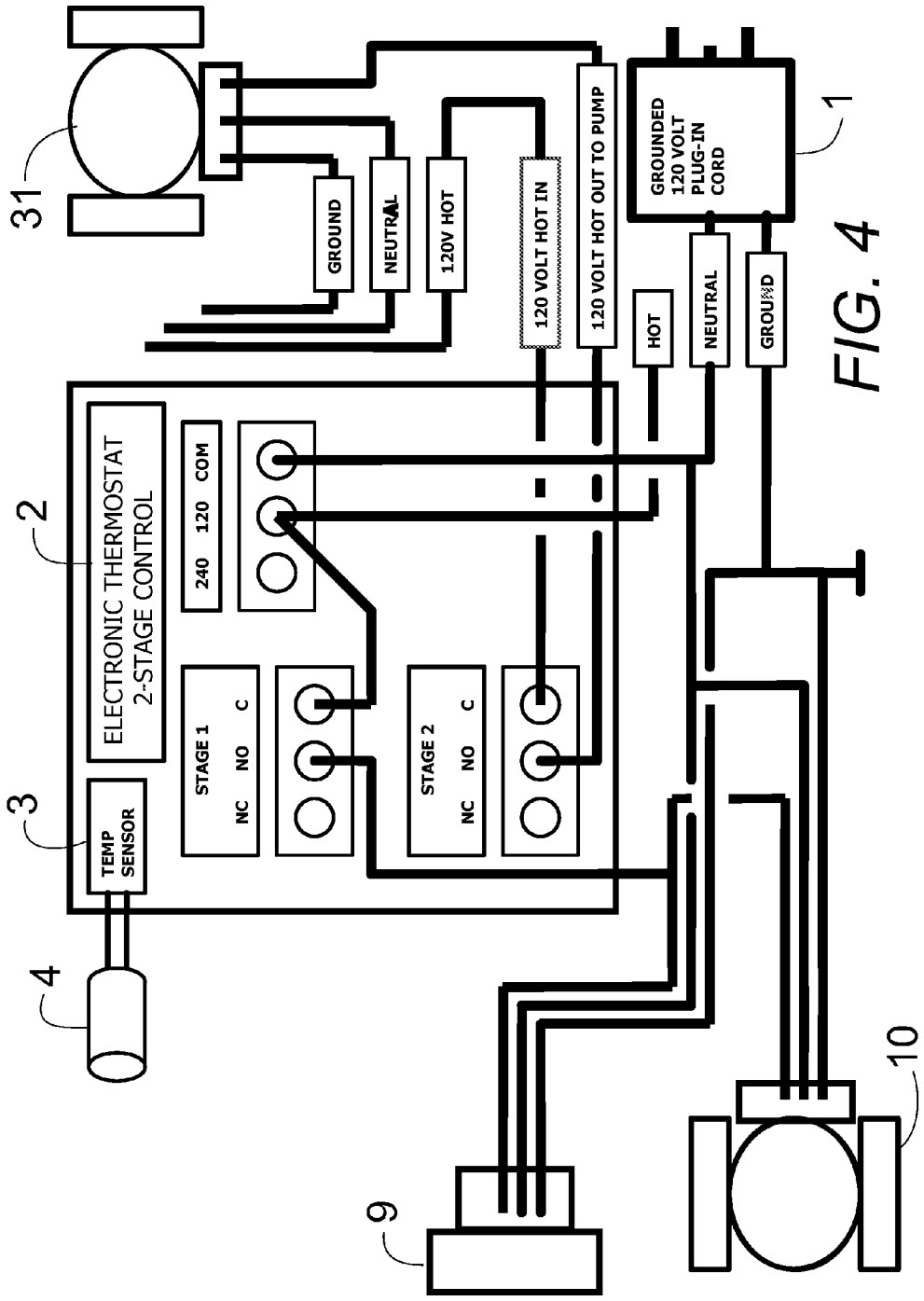
31
GROUND
NEUTRAL
120V HOT
120 VOLT HOT IN
120 VOLT HOT OUT TO PUMP
GROUNDED
120 VOLT
PLUG-IN
CORD
1
HOT
NEUTRAL
GROUND
2
ELECTRONIC THERMOSTAT
2-STAGE CONTROL
240
120
COM
STAGE 1
NC
NO
C
STAGE 2
NC
NO
C
3
TEMP
SENSOR
4
9
10

FIG. 4

# TANKLESS WATER HEATER HOT WATER RETURN SYSTEM

## CROSS-REFERENCE TO RELATED APPLICATIONS

**[0001]** The present utility patent application claims the advantage of provisional applications #60/914001 and #60/913998 both filed Apr. 25, 2007.

## STATEMENT REGARDING FEDERALLY SPONSORED RESEARCH OR DEVELOPMENT

**[0002]** Not Applicable.

## THE NAMES OF THE PARTIES TO A JOINT RESEARCH OR DEVELOPMENT

**[0003]** Not Applicable.

## BACKGROUND OF THE INVENTION

**[0004]** 1. Field of the Invention

**[0005]** The present invention relates to plumbing systems and particularly to a tankless water heating hot water return system which comprises a plumbing system having a hot water recirculating line which brings unused cooled "hot" water from the hot water supply lines back to the hot water heater so that it may be reheated and redirected to the hot water outlet, thereby conserving water.

**[0006]** 2. Description of Related Art Including Information Disclosed Under 37 CFR 1.97 and 1.98

**[0007]** Various hot water recirculating systems have been previously designed, some for boiler-tank systems as documented in U.S. Pat. No. 1,780,379 by Durdin, Jr. and also for use with tank-type water heaters such as documented in U.S. Pat. No. 4,201,518 by Stevenson.

**[0008]** Two of the biggest concerns we face today are escalating energy costs and water conservation. Domestic hot water systems for both commercial and residential applications consume energy for heating and can contribute to waste of fresh water. Hot water systems experience heat losses, increasing energy usage. Systems that are not recirculated require running water down the drain until hot water arrives.

**[0009]** Tankless water heaters are becoming a trend in domestic water heating. They are displacing tank-type water heaters due to their size, efficiency and due to the fact that they do not experience the stand-by losses of tank-type water heater technology. However, tankless water heaters do not accommodate simple, whole-house hot water return like a tank-type heater does. There are several methods for hot water return that are commonly used with tankless water heaters. These methods were originally designed for tank-type technology and have many drawbacks when applied to tankless systems.

**[0010]** The design of a tankless water heater uses a copper heat exchanger to transfer heat into the flowing water. The burner transfers heat into the flowing water through the copper heat exchanger. The heat exchanger has a very high head loss and this complicates simple hot water recirculation. Attempts have been made to come up with a method to resolve these drawbacks. These methods either use enormous amounts of energy, flow directly into the tankless heater and reduce or void its warranty, or service a single fixture group.

**[0011]** The first method has been to directly recirculate back into the water heater. This method, originally designed for a tank-type water heater, is documented in U.S. Pat. No. 5,735,291 by Kaonohi. This method is extremely stressful to the copper heat exchanger of the tankless heater. It is not designed to withstand direct circulation. This method of recirculation has been deemed by tankless manufacturers as detrimental to their heat exchangers. As a result, tankless manufacturers either greatly reduce or void their heat exchanger warranties if they are installed with Direct Recirculation.

**[0012]** The next method commonly used is to employ a tank-type water heater to facilitate hot water return. The tank-type water heater allows hot water to recirculate and functions as a buffer. The tank-type heater does not have the head losses associated with tankless heaters, so it can accept circulation. This method does protect the tankless heater's heat exchanger, but it has astronomical energy consumption. The tank-type water heater method totally defeats the purpose of "Tankless" water heating and will add back stand-by losses to the system. The KW input of an electric tank-type water heater is not enough to efficiently heat the return line. The electric element remains on any time the return pump is active. This method actually uses more energy than a standard tank-type water heater being used as the only water heating source. This method also does not maintain system temperatures due to the fact that the low-input tank-type water heater is trying to heat the return line, not the Tankless heater.

**[0013]** The last method that is commonly used is to employ a under-sink recirculation system. These systems draw hot water from the hot water pipe and circulate the flowing water into the cold water supply. These systems were originally designed for use with tank-type water heaters but can be applied to tankless heaters.

**[0014]** Several of these prior art systems are documented, such as U.S. Pat. No. 5,323,803 by Blumenauer, U.S. Pat. No. 5,277,219 by Lund, U.S. Pat. No. 5,941,275 by Laing and U.S. Pat. No. 5,829,475 by Acker. These systems can deliver hot water, but only to a specific fixture group. They do not address whole-house recirculation and require activation. The systems are either activated by flow, temperature, manual push button or motion sensors. These systems can over-heat the cold water supply resulting in increased energy costs. They can be useful in systems that cannot accommodate a dedicated hot water return line.

**[0015]** Many gallons of water are wasted by turning on hot water taps and showers and waiting until the cold water standing in the hot water pipes passes through the tap. Without a recovery system the water has simply been allowed to run down the drain thus not only wasting good water but overburdening waste water treatment plant with additional volumes of water.

**[0016]** Currently the prior art systems must have a storage tank or electric storage heater to properly operate a recirculation system with tankless water heaters.

**[0017]** U.S. Patent Application #20060022062, published Feb. 2, 2006 by Morris, is for an on-cue hot-water circulator consisting of an electronic control module, a manifold containing a check valve and/or a normally closed solenoid valve, a flow switch, and a high-performance pump (not a typical circulation pump), that is also designed or selected for its ability to allow water to pass through it with little or no restriction, when not operating. In a retrofit installation, the cold-water supply line is used for returning purged water to the water heater.

Prior Art System with Basic HWR with Timer, Flow Switch—use of Cold Water Line

**[0018]** U.S. Patent Application #20030089399, published May 15, 2003 by Acker, provides a smart demand hot water recirculation system includes a hot water source and at least one plumbing fixture having a hot water inlet. A pump is provided to circulate water to and from the fixture and a controller, responsive to a plurality of a generated control signals, based on fixture use, activates the pump based on a statistical analysis of control signal timing.

Demand Type System Requiring External Controls/Basic HWR System

**[0019]** U.S. Patent Application #20050006402, published Jan. 13, 2005 by Acker, shows a method of operating a plumbing system and a hot water recirculation system. The system generally comprises a hot water source, for example a water heater, such as for example, a gas, oil, solar or electric tanks or tankless heater, interconnected by means of pipes with plumbing fixtures, said pipes providing conduit means for enabling circulation of hot water from said hot water source to each plumbing fixture and return to the hot water source. The pipes are thus in fluid communication with the hot water source and the plumbing fixtures in such a way as to establish a hot water loop. This is mainly for a Pump Controller that creates its own operating pattern

**[0020]** U.S. Patent Application #20060230772, published Oct. 19, 2006 by Wacknov, claims a system and method for efficient and expedient delivery of hot water which detects and anticipates fluid flow in a pipe utilizing a sensor, a processor, and a time base. In an alternate system, a recirculation extension is included in system, wherein an additional plumbing line attaches at a point of the hot water plumbing system. The point of attachment is selected to include as much of the hot water distribution system as possible between hot water heater and the point of attachment. The recirculation plumbing extends from the point of attachment and returns to hot water heater at a second point. The hot water return is shown as a separate conduit into the hot water heater. A pump is often included to move water. The pump may run continuously or be regulated by a number of control schemes.

Another Processor Pump Controller/Timing Sensitive

**[0021]** U.S. Pat. No. 5,277,219, issued Jan. 11, 1994 to Lund, is for a hot water demand system suitable for retrofit. A control system causes the pump to circulate water from the hot water line into the cold water line and back to the hot water source when a hot water valve on said plumbing fixture is turned on. A temperature sensor stops the pump, via the control system, to prevent heated water from being circulated through the cold water delivery lines.

Basic Demand System for Single Fixture Requiring Activation, Remote Sensors and Utilizing the Cold Water Piping.

**[0022]** U.S. Pat. No. 4,201,518, issued May 6, 1980 to Stevenson, shows a recirculating hot water system which includes a hot water supply pipe and a hot water return pipe connected in a loop between a hot water outlet of a hot water tank and a return inlet to that tank. An electrically controlled recirculating pump is placed in the return pipe between the inlet to the hot water tank and the supply pipe, which has hot water taps located at various points along it.

Basic HWR for Tank-Type Heaters Requiring Manual Activation

**[0023]** U.S. Patent No. 5,572,985, issued Nov. 12, 1996 to Benham, claims a recirculating system with a by-pass valve. The recirculating hot water system comprises a boiler for heating a continuous supply of hot water, a recirculating water line comprising a supply line connected to an outlet of the boiler for conveying water from the boiler to at least one use station and a return line for returning water not consumed at the station to the boiler, a circulating pump in the return line for continuously circulating water in the water line, a by-pass circuit for by-passing the recirculating line connected at an outlet of the pump and an inlet to the pump, and a by-pass valve in the recirculating line at the by-pass line for directing water at a predetermined temperature through the by-pass line. For continuous circulation only/Special Valve that regulates a variable flow rate/By-Pass is for regulation of temperature

**[0024]** U.S. Pat. No. 4,606,325, issued Aug. 19, 1986 to Lujan, Jr., describes a water conservation system for use in residential dwellings or other buildings having a hot water distribution system. The system conserves water which is typically wasted by users while waiting for warm water to flow from a hot water faucet. The system provides a recirculating cooled hot water supply line from the cooled-off end of a hot water line back to the hot water heater of the hot water distribution system. The system is provided with a plurality of control means to electrically energize the system's recirculating pump so long as a pressure switch detects that the main water supply is providing sufficient water pressure to the system. In operation the recirculating pump opens a check valve in the recirculating line and closes the check valve in the main water supply line and recirculates the cooled hot water back to the hot water heater for ultimate use. If the main water supply has insufficient pressure, the recirculating cooled hot water system is non-functional.

Basic HWR with a Pressure Switch Required to Activate, Based on Incoming Water Pressure.

**[0025]** U.S. Pat. No. 5,829,475, issued Nov. 3, 1998 to Acker, discloses an on-demand zone valve recirculation system. The zone valve hot water recirculation system generally includes a hot water source, such as an electric or gas water heater, a conduit for enabling circulation of hot water from hot water source to one or more plumbing fixtures and recovery of water to the hot water source, a pump for accelerating delivery of hot water to the fixtures and, importantly, a zone valve for preventing flow of water into the hot water source during standby periods of the hot water source. A controller, which may include an electronic timer, is provided for causing the zone valve to open and close and the pump to start and stop.

Demand Type System that Functions as an Inlet Booster Pushing Water Towards the Fixture. It also Closes and Controls the HWR Line.

**[0026]** U.S. Pat. No. 4,750,472, issued Jun. 14, 1988 to Fazekas, indicates a control means and process for domestic hot water re-circulating system having a hot water supply pipe and a hot water return pipe connected in a loop between a hot water outlet of a hot water tank and a return inlet to that tank, and having an electrically controlled recirculating pump in the loop, for keeping sufficient circulation in the loop as to

assure substantially instant dispensing of water of a desirably high temperature. The control governs the operability of the recirculating pump, causing it to operate for a pre-established time period as determined by the amount of time required to bring the supply pipe portion of the recirculation loop up to desired maximum operating temperature. After the supply pipe portion of the recirculation loop is brought up to the desired maximum operating temperature, the control switches off the recirculating pump for a pre-established time period determined by the heat-holding capability of the supply side of the recirculating loop, and the minimum desired operating temperature of the supply portion of the recirculating loop.

Tank-Type HWR Based on Timing, NOT Temperature.

**[0027]** U.S. Pat. No. 1,780,379, issued Nov. 4, 1930 to Durdin, Jr., puts forth an automatically controlled hot water circulating system. The hot water is supplied from the hot water tank or reservoir through a supply pipe to the hot water faucets and then is returned by way of a return pipe through a pump back to the hot water reservoir. The pump is operated to circulate water from the top or hot water side of the storage reservoir back to the bottom, so that hot water is continuously available throughout the length of the supply pipe.

Basic HWR with Boiler and Storage Tank. Does not Apply to Tankless HWR.

**[0028]** U.S. Pat. No. 7,036,520, issued May 2, 2006 to Pearson, Jr., concerns a hot water heater recirculation system and method. The hot water recirculation system includes a source of hot water, a fixture, a fluid circuit, a fluid pump, and an electrical circuit sensor. The fixture is remote from the source of hot water and is configured to dispense hot water. The fluid circuit extends from the source to the fixture for delivering hot water to the fixture. The fluid circuit returns to the source for recirculating hot water in the fluid circuit back to the source for reheating. The fluid pump is configured for recirculating hot water through the fluid circuit. The electrical circuit sensor is configured to detect operation of an electrical circuit proximate the fixture and associated with a user operating the fixture. The electrical circuit sensor is further configured to initiate operation of the fluid pump responsive to detected operation of the electrical circuit to initiate hot water recirculation.

Tank Type HWR with Remote Activation Required (Motion Sensing)

**[0029]** U.S. Pat. No. 4,945,942, issued Aug. 7, 1990 to Lund, illustrates an accelerated hot water delivery system for providing hot water to a plurality of plumbing fixtures from a hot water source. Flow switch means are provided to enable a pump to circulate hot water to the plumbing fixtures in response to water being withdrawn from a plumbing fixture. In addition, the hot water source may include a hot water recovery apparatus for withdrawing hot water from circulation pipes subsequent to cessation of water flow from a plumbing fixture.

Flow Activated—Booster Type System

**[0030]** U.S. Pat. No. 4,936,289, issued Jun. 26, 1990 to Peterson, is for a usage responsive hot water recirculation system. The energy conservation apparatus controls the operation of a recirculating hot water distribution system which comprises of a hot water heater having an outlet and an inlet; a return pipe interconnecting the end of the supply pipe back to a tee on the makeup water inlet to form a loop; and an electrically operated recirculating pump in the loop, usually on the return pipe, that circulates the hot water around the loop. Thus hot water is available anywhere in the system without having to first discharge any cooled hot water that has been standing in the piping. The invention consists of a sensitive flow sensor or usage detection device located on the unheated makeup water supply and connected to a controller. The controller turns on the recirculating pump only when hot water is draw from any of the usage points. The invention saves energy by reducing the heat loss from the hot water distribution system. Options are available to prevent false activation due to system leakage, to prevent activation on very short usages, to turn off or prevent the activation of the system if the distribution system is already hot, to run the pump for a preset minimum time and/or to monitor leakage or sensor problems in the system.

Not Basic HWR—Activated by Flow and Turns Off when CW Stops. Demand/Booster Type

**[0031]** U.S. Pat. No. 4,628,902, issued Dec. 16, 1986 to Comber, provides a hot water distribution system for providing almost instantaneous supply of hot water at a hot water usage outlet. The system of the invention comprises a closed loop and a pump circulating hot water in the closed loop from a supply of hot water and back to the supply of hot water. One or more usage outlets are connected to the closed loop each by a relatively short length of pipe. A one-way check valve prevents drawing water from the return line of the closed loop. Heat insulation of the closed loop is provided to prevent unnecessary heat losses, and a thermally operated switch may be used to control the operation of the closed loop circulation pump to maintain the water in the closed loop at a predetermined temperature.

Basic Tank-Type HWR

**[0032]** U.S. Pat. No. 7,000,626, issued Feb. 21, 2006 to Cress, shows an instantaneous and constant fluid delivery system and a method and means for maintaining a constant supply of a fluid with specific characteristics within a fluid supply conduit from a supply source of the fluid with specific characteristics at a point of service of the fluid with specific characteristics in which a first open end of a recirculation conduit is located within the fluid with specific characteristics supply conduit adjacent the point of service. A second end of the recirculation conduit is connected to pump means in such manner that a portion of the fluid with specific characteristics within the fluid with specific characteristics supply conduit adjacent the point of service is constantly circulated back. In an alternate embodiment a similar recirculation conduit is utilized in a manner to prevent freezing of conduits in a total fluid supply line which includes portions in relatively warm areas and in areas subject to freezing.

Domestic Pipe-In-Pipe Tempering System

**[0033]** U.S. Pat. No. 4,917,142, issued Apr. 17, 1990 to Laing, claims a secondary circulation device for effecting secondary circulation of water into a hot water tank not having a return opening. The arms of a T-fitting are place in series with the distribution line near the outlet port of the water tank. A return line, continuous at one end with the distal portion of the distribution line, is continuous at the other end with a relatively small internal line which lies within the leg of the T-fitting, one arm of the T-fitting, and extending through the

outlet port into the water tank. A relatively low power pump and a sinking-ball valve are placed in series with the return line to cause the flow of water in the secondary circulation system to flow in one direction only.

Tank-Type HWR with Special Diverter Fitting

**[0034]** U.S. Pat. No. 5,735,291, issued Apr. 7, 1998 to Kaonohi, describes a hot water re-circulating system for a building comprising a water pump connected between an auxiliary water return line extending from a hot water faucet to a remote hot water heater. The water pump is controlled by a timer/switch located at the hot water faucet, so that when the hot water faucet is opened, hot water will come out therefrom. In a second embodiment, two water pumps are each connected between two auxiliary water return lines extending from two hot water faucets to a remote hot water heater. Each water pump is controlled by a timer/switch located at the hot water faucets, so that when the hot water faucets are opened, hot water wall come out therefrom.

Direct Recirculation—Basic HWR with Remote Activation Required.

**[0035]** U.S. Pat. No. 6,997,200, issued Feb. 14, 2006 to King, discloses a water conservation system which recirculates and/or recycles fluids normally lost down the drain during the time it takes for a desired temperature to be attained for usage of the hot fluids. A recirculating/recycling valve, through which hot fluids may flow, has an additional port fitted to the valve body, which by positioning the handle in a singularly unique position, fluids not at the desired temperature are sent back to the source from which they came, to a recycling toilet tank system or to a recycling standpipe at atmospheric pressure.

This is a Hot and Cold Water Conservation System. Does not Apply to Tankless HWR

**[0036]** U.S. Pat. No. 5,829,475, issued Nov. 3, 1998 to Acker, indicates an on-demand zone valve recirculation system. The zone valve hot water recirculation system generally includes a hot water source, such as an electric or gas water heater, a conduit for enabling circulation of hot water from hot water source to one or more plumbing fixtures and recovery of water to the hot water source, a pump for accelerating delivery of hot water to the fixtures and, importantly, a zone valve for preventing flow of water into the hot water source during standby periods of the hot water source. A controller, which may include an electronic timer, is provided for causing the zone valve to open and close and the pump to start and stop.

Tank-Type Basic HWR with Zone Valve that Opens and Closes HWR to Heat Source. Cannot be Used for Continuous Operation.

**[0037]** U.S. Pat. No. 7,077,155, issued Jul. 18, 2006 to Giammaria, puts forth a hot water circulating system which provides instant hot water including a hot water source connected to one or more fixtures and a hot water return line from the fixture to the hot water source including a check valve and a continuous circulation pump in the return line.

Standard Tank-Type HWR

**[0038]** U.S. Pat. No. 5,941,275, issued Aug. 24, 1999 to Laing, concerns a pump for periodic conveyance of the cooled-down water content of a hot water distribution line. The hot water distribution system incorporates a pump positioned close to, and between each set of hot and cold water taps to which periodically move the cooled-down water content of the hot water distribution line through the cold water distribution line back to the hot water tank until the total content of the hot water line has a predetermined temperature. The pump is provided with a valve responsive to pump-generated pressure to prevent backflow when the pump is not in use and the pressure in the cold water distribution line is lower than the pressure in the hot water distribution line, such as when water is drawn through a cold water tap.

Demand Type System—Single Fixture—Hot/Cold Cross Connection

**[0039]** U.S. Pat. No. 4,142,515, issued Mar. 6, 1979 to Skaats, illustrates a timed water recirculation system and apparatus for effecting a timed recirculation of the hot water in a water distribution network such as for an apartment complex. A recirculating pump is responsive to a drop in pressure in the hot water output line of a water heater and provides recirculation of the water in the hot water lines from the remote apartment locations for a timed interval. After the timed interval, and after the system has returned to the starting pressure, the recirculating pump is again ready for operation at the time of the next use of the hot water in the system.

Timer Based and Pressure Sensitive HWR

**[0040]** U.S. Pat. No. 4,450,829, issued May 29, 1984 to Morita, is for a water-saving hot water distribution system for a dwelling or other building designed to avoid the waste of water incident to letting the water run until hot water reaches an open hot water faucet or valve. Adjacent each hot water outlet valve there is a control unit having an inlet connected to a hot water supply line from the water heater, a supply outlet connected to the hot water faucet or valve and a return outlet connected by a return line to an inlet of the water heater. Between the inlet and the supply outlet of the control unit there is a normally closed valve which is thermostatically controlled so as to open only when water in the control unit is at or above a predetermined temperature. When a hot water faucet or valve is opened and water in the hot water supply line has cooled to a temperature below a predetermined value, the control valve remains closed and water in the hot water supply line is returned to the water heater by a circulating pump. When hot water reaches the control unit, the control valve is thermostatically opened so as to supply a full flow of hot water to the faucet or outlet valve. The water circulating pump is then turned off, thereby avoiding a waste of energy that would be incident to continuous operation of the pump. Standard Tank-Type HWR requiring control valve at each fixture.

**[0041]** Most of the prior art systems are very similar to each other. Most are standard tank-type hot water recirculation systems. Only a couple could be applied to tankless, but they are demand type systems that predominately serve a single fixture or have special controls or valves. Some of these require remote activation or sensors. Some of these systems have similar components and piping arrangements.

**[0042]** What is needed is the system of the present invention which is engineered and designed to address the complications associated with tankless water heaters and efficient hot water return. The present invention utilizes the modulating burner of a tankless heater to effectively and efficiently heat the return line, avoid stand-by losses associated with tank-type water heaters and protect the heat exchanger of the tankless heater. Furthermore, the present invention is designed to operate without the use of auxiliary sensors,

activation and associated wiring. The invention is designed to conserve water and fuel while providing instantaneous hot water to every fixture group in conjunction with tankless water heater installations. The present invention allows the use of traditional hot water return, pump sizing and piping for tankless water heating applications.

## BRIEF SUMMARY OF THE INVENTION

**[0043]** The objective of the invention is to facilitate traditional hot water return in tankless water heating systems and eliminate the use of water storage tanks in potable domestic hot water recirculation systems. This eliminates the need for additional storage equipment in non storage applications, specifically designed to operate with various flow and pressure sensitive heating products such as tankless water heaters.

**[0044]** In brief, a tankless water heater hot water return system allows the use of traditional hot water return, pump sizing and piping methodology for tankless water heating applications. As water circulates through the unit's hot water recirculation line, the device senses that the system loop has fallen below the set point. The device then allows water to pass though the device and into the heat source heat exchanger. Once the system set point has been satisfied, the device will turn off until another demand for heating cycle. This is an energy efficient device due to low power consumption, electronic start and stop, low heating requirements and conservation of water.

**[0045]** The present invention is engineered to specifically facilitate Hot Water Recirculation (HWR) in conjunction with Tankless Water Heaters. The present system has been designed, tested and is moving towards third Party Approval and Manufacturing. The present system is a simple piping arrangement with a Pump, Solenoid Valve and Electronic Temperature Control. An alternate embodiment does not employ the Solenoid Valve.

**[0046]** The present invention is designed to facilitate hot water recirculation in conjunction with tankless water heaters, specifically addressing the major issues related to tankless hot water return recirculation. The present invention inherently lends itself to energy efficiency and water conservation.

**[0047]** The present invention differs from all prior art inventions in several distinct ways:

**[0048]** 1) The present system is specifically designed to facilitate Whole House Hot Water Recirculation with Modulating Tankless Waters Heaters. All other systems have been designed around Tank-Type heaters and some have been adapted for use with tankless heaters.

**[0049]** 2) The system pump of the present invention has been sized in accordance with tankless heater requirements, flow rates and burner modulation.

**[0050]** 3) The system of the present invention protects the tankless heater from direct recirculation HWR, which most of the prior art systems employ. Direct recirculation in prior art systems reduces and/or voids tankless heater warranties.

**[0051]** 4) The system of the present invention was designed to replace tank-type heaters that are being used for tankless HWR. The tank-type units do not reduce tankless warranties, but they have enormous energy costs associated with their operation.

**[0052]** 5) The system of the present invention is temperature based and does not require any external sensors, motion detectors, remote switches and associated wiring. The system of the present invention is totally self contained and pre-wired.

**[0053]** 6) The system of the present invention does not require timing controls, processors or pattern trending. It is temperature based with a fully adjustable differential for maximum energy efficiency.

**[0054]** 7) The system of the present invention is designed to operate with either continuous or intermittent HWR Pump.

**[0055]** 8) The system of the present invention is a true, traditional HWR system that does not waste energy by heating the cold water supply. Some of these other systems utilize the cold water line, in lieu of a separate HWR line. This method is unnecessarily heating the cold water supply and wasting energy.

**[0056]** The Tankless Return Solution Hot Water Return System of the present invention is design engineered to address and to correct tankless water heating systems utilizing hot water recirculation. The invention addresses all of the outstanding issues that result from piping tankless water heaters with hot water recirculation.

**[0057]** The present invention allows the user the ability to pipe tankless water heaters with traditional recirculation. It eliminates the head losses associated with tankless heat exchangers and allows the user to utilize a small, fractional horsepower pump, further saving energy during operation.

**[0058]** The present invention utilizes the modulating burner of the tankless heater to only use the amount of fuel necessary to heat the return line.

**[0059]** The present invention forces circulation through the tankless heater only when heat is required. The present invention by-passes the tankless heater when not heating the return line. This prevents reduction of warranty as constant or direct circulation is not employed.

**[0060]** The present invention uses built-in temperature sensing with adjustable differential to maximize efficiency. The invention does not require any external sensors or activation. The invention works in conjunction with a timer to reduce wasted energy in non-use periods.

**[0061]** The present invention eliminates the use of tank-type water heaters as the recirculation heat source. A typical hot water return line in a residential application requires approximately 5,000 BTU per hour to maintain a 10° F. temperature differential. Small electric tank-type water heaters only have an input of 5118 BTU per hour at 1.5 KW. This means that as long as there is circulation, the electric water heater element will be on, trying to maintain temperature. The present invention efficiently and effectively heats the hot water return line with the tankless heater which has much greater input (199,999 BTU per hour). The invention also eliminates the stand-by losses associated with tank-type water heaters.

**[0062]** The present invention is designed to operate a whole-house or whole-building recirculation. It services all fixture groups within a building, not just a single fixture group. The invention provides instantaneous hot water at every fixture. Many state building codes such as the Florida Building Code require hot water recirculation on any piping system exceeding 100 feet in length. The invention allows users of tankless water heaters to efficiently employ hot water recirculation without the negative impacts of wasted energy, reduced warranties and single fixture, point of use recirculation. The invention returns heated water back to the tankless heater instead of dumping it into the cold water line, where it

will be utilized, rather than creating more heat loss by injecting heated water into uninsulated cold water piping.

**[0063]** The present invention is designed to use the least possible amount of electricity to operate. The invention uses only 175 watts of energy in full operation and less than 100 milliamps of power in stand-by mode. Electrical energy is more expensive to operate than natural or LP gas.

**[0064]** The present invention uses the quick recovery of the gas fired tankless heater to conserve energy and to effectively heat the return line.

**[0065]** Heat losses through circulation and radiation can be controlled by avoiding constant circulation and through insulation of hot water piping. As mentioned above, many state building codes also require hot water lines to be insulated if they exceed 100 feet in length. It is good practice to insulate all hot water lines to avoid heat loss. The use of timers on recirculation systems is always recommended to maximize energy savings. The invention is designed to provide cost-effective and energy efficient hot water recirculation for tankless water heaters.

**[0066]** Water conservation is an extremely important issue today. Millions of gallons of fresh water are wasted each year by systems that do not employ some type of hot water recirculation. The US DOE estimates that an average family of four can yearly waste over 10,000 gallons of water down the drain just waiting for hot water to arrive at the point of use. The energy consumed by maintaining a recirculation system is easily offset by water and sewer charges. But this only is true if an energy efficient system such as the presented invention is employed. A tank-type water heater used for recirculation with a tankless heater has energy costs greater than a tank-type water heater operating stand-alone.

**[0067]** The present invention resolves complications that are experienced when utilizing hot water return recirculation in conjunction with tankless water heaters. These issues specifically addressed by the invention are: Reduction of tankless warranties due to Direct Recirculation, Use of Tank-Type Storage Water Heaters for Tankless Hot Water Return and Single Fixture Group Recirculation requiring activation, associated sensors, switches and wiring.

**[0068]** The present invention exclusively resolves each and every issue currently affecting tankless hot water return systems. There are various methods that have been adapted to assist tankless hot water return, but these methods and systems do not resolve each and every outstanding issue.

**[0069]** The present invention provides a design engineered, packaged piping system comprising:

**[0070]** Copper or CPVC Tubing

**[0071]** Non-Ferrous Fittings

**[0072]** Check Valves

**[0073]** Solenoid Valve(s)

**[0074]** Bronze Heating Pump(s)

**[0075]** Electronic Temperature Control

**[0076]** Piping By-Pass for heater protection

**[0077]** Built-In Temperature Sensing

**[0078]** The present invention provides system sizing of the heating pump and solenoid valve to provide an acceptable flow rate during heating cycles.

**[0079]** The present invention incorporates the following features:

**[0080]** By-Pass of all return water flow away from the tankless heater in stand-by (off) mode.

**[0081]** Utilization of the modulating burner of the tankless heater and use of the tankless heater as the hot water return heat source.

**[0082]** Compensation for tankless heat exchanger head losses to provide traditional whole-house and whole-building hot water return recirculation for tankless water heaters.

**[0083]** Built-In Temperature Control and Sensing that does not require external controls, switches, sensors, timing mechanisms or remote activation.

**[0084]** Pump Delay Relay for controlling the system hot water return pump.

**[0085]** Energy Efficient design to use a minimal amount of energy to operate.

## BRIEF DESCRIPTION OF THE SEVERAL VIEWS OF THE DRAWINGS

**[0086]** These and other details of my invention will be described in connection with the accompanying drawings, which are furnished only by way of illustration and not in limitation of the invention, and in which drawings:

**[0087]** FIG. **1** is a diagrammatic plan view of the layout of the piping arrangement and location of each component of the present invention showing how the present invention is configured with specific fittings and component locations;

**[0088]** FIG. **2** is a diagrammatic piping diagram and an explanation of how the invention operates in full heating mode. This mode is active when the system is calling for heat in the hot water return line. This drawing indicates how the invention is piped into the tankless heater and system hot water supply and return;

**[0089]** FIG. **3** is a piping diagram and an explanation of how the invention operates in the stand-by mode, when there is no call for heat in the hot water return line. This drawing indicates how the invention is piped into the tankless heater and system hot water supply and return;

**[0090]** FIG. **4** is a Sequence of Operation and corresponding wiring diagram for the invention. This written sequence of operation explains exactly how the invention operates electrically and mechanically from the time that power applied until the system temperature is satisfied. The sequence of operation describes how the Electronic Temperature Control switches power to turn the system on and off.

## DETAILED DESCRIPTION OF THE INVENTION

**[0091]** In FIGS. **1-4**, a tankless hot water return recirculation system **20** (indicated by dashed rectangle in FIGS. **1-3**) is integrated into a tankless hot water distribution heater **30** and pipe array.

**[0092]** The hot water return recirculation system **20** is alternately connected to and isolated from the tankless hot water heater **30** having a cold water feed pipe **16** and a hot water distribution pipeline **5**. The hot water return recirculation system **20** comprises a recirculation pipeline **15** connecting between the hot water distribution pipeline **5** and the tankless hot water heater **30** for pumping previously heated warm water from the hot water distribution pipeline **5** back through the recirculation pipeline **15** to the tankless hot water heater **30** for reheating the warm water in the hot water heater to send the reheated water back through the hot water distribution pipeline for use. Means for opening and closing a pipeline connection between the hot water distribution pipeline and the water recirculation pipeline, which may comprise a normally closed solenoid valve **9** in the recirculation pipeline

which opens to admit heated water from the hot water distribution pipeline **5** into the water recirculation pipeline **15** or closes to bypass the heater **30**. Means for opening and closing a pipeline connection between the recirculation system and the tankless hot water heater, which may comprise a recirculation to heater by-pass valve **11** cooperating with means for opening and closing the return water feed pipeline connection to the tankless hot water heater. An inline water recirculation pump **10** pumps the warm water from the hot water distribution pipeline **5** to the tankless water heater **30**.

**[0093]** A temperature sensor **3** with a temperature indicator **2** is positioned in a brass dry well **4** in the hot water distribution pipeline **5**. A two stage electronic temperature control **2** communicates with the temperature sensor **3**, the recirculation pump **10**, and the means for opening and closing the pipeline connections **9** and **11** to activate the recirculation pump **10** to activate a flow of warm water from the hot water distribution pipeline **5** to the tankless hot water heater **30** for heating the warm water when the warm water in the hot water distribution pipeline reaches a low set temperature and to deactivate the recirculation pump **10** and switch back the means for opening and closing pipeline connections **9** and **11** when the water temperature reaches a set high temperature to isolate the hot water return recirculation system **15** from the tankless hot water heater **30** and the hot water distribution pipeline **5**.

**[0094]** A normally partially open recirculation pump valve **12** in the recirculation pipeline **15** acts as a water prime to the recirculation pump **10** and serves as a secondary by-pass line in the event of the solenoid valve **9** failure.

**[0095]** A normally open cold water supply pipe **33** feeds the tankless hot water heater **30**.

**[0096]** The hot water pipelines **5** and **15** preferably further comprise an outer layer of thermal insulation to minimize radiation heat loss therefrom.

**[0097]** The recirculation pump **10** of the present invention is structured to function in accordance with the tankless water heater **30** requirements, flow rates and hot water heating modulation.

**[0098]** The hot water return recirculation system **20** is configured for whole house hot water recirculation with modulating tankless water heaters **30**. The hot water return recirculation system **20** protects the tankless water heater **30** from direct recirculation from the hot water distribution pipeline **5**.

**[0099]** The hot water return recirculation system **20** is configured to operate with either a continuous hot water return pump or an intermittent hot water return pump.

**[0100]** The hot water return recirculation system **20** is connected to the modulating burner of the tankless water heater **30** for use of the tankless water heater as a hot water return heat source.

**[0101]** The hot water return recirculation system **20** is connected to a tankless water heater **30** with a traditional hot water return. The hot water return recirculation system **20** of the present invention compensates for the head losses of the tankless heater to allow for whole-house and whole-building hot water return.

**[0102]** In use in FIG. **1**, the drawing depicts the invention's layout of components and their respective locations. The hot water return recirculation system of the present invention is a piping arrangement constructed of CPVC or Copper Tubing with elbow and tee fittings as shown on the FIG. **1** drawing.

**[0103]** The system comprises a 120 Volt Pug-In Cord **1** and an Electronic Temperature Control **2** with two stages of control. The first stage controls the hot water return recirculation system of the present invention and the second stage controls an external hot water return pump in the tankless water heater hot water distribution pipeline. The Electronic Temperature control **2** has a remote temperature sensor wire and sensing bulb **3**. The Sensing Bulb **3** is in located in Brass Dry Well **4**. The Brass Dry Well **4** is immersed in the Lower By-Pass Pipe **5** of the hot water distribution pipeline to sense system return temperature.

**[0104]** A lower hot water return by-pass valve **6** is located on the lower by-pass pipe **5** of the hot water distribution pipeline for servicing of the invention. A hot water return check valve **7** is located on the lower by-pass pipe **5** to insure that flow can only be directed in one direction, away from the hot water return recirculation system and the tankless heater.

**[0105]** A system check valve **8** allows for flow from a tankless heating source in one direction, to mix flow with the return water that is flowing through the lower by-pass pipe **5**. In a stand-by (off) mode there is no other flow through the invention.

**[0106]** Upon a call for heating of the return line, as sensed by the sensing bulb **3** of the electronic temperature control **2**, the invention is activated for heating of the hot water return line. The electronic temperature control **2** switches power to the Solenoid Valve **9** and to the Heating Pump **10** simultaneously. The system check valve **11** only allows flow towards the tankless heating source and prevents any backflow of cold water.

**[0107]** The Upper Heating Pump Fill Valve **12** is provided for water prime to the Heating Pump **10** and also functions as a secondary by-pass line in the event of Solenoid Valve **9** failure.

**[0108]** An Aquastat Relay two stage electronic temperature control **2** is preferably provided to allow for starting and stopping the system hot water return pump based on return temperature.

**[0109]** In reference to FIG. **2**, the drawing is a piping diagram and an explanation of how the invention operates in full heating mode. This mode is active when the system is calling for heat in the hot water return line. This drawing indicates how the invention is piped into the tankless heater and system hot water supply and return.

**[0110]** Power is applied through 120 Volt Pug-In Cord **1**. Electronic Temperature Control **2** and Temperature Sensor **3** senses hot water return temperature. The system Hot Water Return Pump **10** is circulating water from the system supply to the system return piping either continuously or intermittently.

**[0111]** If the hot water return temperature is 10° F. below the Electronic Temperature Control **2** setpoint, the invention is activated for heating of the hot water supply and return piping. The electronic temperature control **2** is accurate to ±1° F. The electronic temperature control **2** switches power to activate the Solenoid Valve **9** and the Heating Pump **10**. The Solenoid Valve **9** opens and the Heating Pump **10** begins to circulate water towards the inlet of the tankless heater **30**.

**[0112]** The tankless heater **30** begins to heat the flowing water and discharges the heated water back into the system supply pipe **5**. The heated water is recirculated from the farthest fixture group **35** back to the hot water return connection of the invention **15**. The system hot water return pump **31** continues to circulate the heated water around the hot water loop **5**. The hot water return check valve **7** and the system

check valves **8** and **11** only allow flow in one direction, preventing stray flow or backflow from the cold water inlet piping **33**.

**[0113]** The Lower By-Pass Valve **6** is normally in the full open position and is provided for servicing of the invention.

**[0114]** The Upper Heating Pump Fill Valve **12** is normally partially open to provide water prime to the Heating Pump **10**. The upper heating pump fill valve **12** also functions as a full by-pass in the event of Solenoid Valve **9** failure.

**[0115]** In reference to FIG. **3**, the drawing is a piping diagram and an explanation of how the invention operates in By-Pass or Off Mode. This mode is active when the system has satisfied the call for heat in the hot water return line. This drawing indicates how the invention is piped into the tankless heater and system hot water supply and return.

**[0116]** Power is applied through 120 Volt Pug-In Cord **1**. Electronic Temperature Control **2** and Temperature Sensor **3** senses hot water return temperature. The system Hot Water Return Pump **31** is circulating water from the system supply to the system return piping either continuously or intermittently.

**[0117]** If the hot water return temperature is within 10° F. of the Electronic Temperature Control **2** set point, the invention is deactivated for heating of the hot water supply and return piping. The electronic temperature control **2** is accurate to ±1° F. The electronic temperature control **2** disconnects power to the Solenoid Valve **9** and the Heating Pump **10**. The Solenoid Valve **9** closes and the Heating Pump **10** turns off to stop circulation water towards the inlet of the tankless heater **30**.

**[0118]** The heated water is recirculated from the farthest fixture group **35** back to the hot water return connection of the invention **15**. The system hot water return pump **31** continues to circulate the heated water around the hot water loop **5**. The hot water return check valve **7** and the system check valves **8** and **11** will only allow flow in one direction, preventing stray flow or backflow from the cold water inlet piping **33**.

**[0119]** The Lower By-Pass Valve **6** is normally in the full open position and is provided for servicing of the invention.

**[0120]** The Upper Heating Pump Fill Valve **12** is normally partially open to provide water prime to the Heating Pump **10**. The upper heating pump fill valve **12** also functions as a full by-pass in the event of Solenoid Valve **9** failure.

**[0121]** In reference to FIG. **4**, the drawing is a Sequence of Operation and corresponding wiring diagram for the invention. This written sequence of operation explains exactly how the invention operates electrically and mechanically from the time that power applied until the system temperature is satisfied. The sequence of operation describes how the Electronic Temperature Control switches power to turn the system on and off.

**[0122]** The system Hot Water Return Pump **1** is On for continuous operation or Off for Pump Delay Relay.

**[0123]** 120 Volt Power is applied through Plug-In Cord **2**.

**[0124]** Electronic Temperature Control Sensor **3** reads a low return water temperature of 105° F. or less.

**[0125]** Electronic Temperature Control **2** energizes NO Contact on Stage **2** at 105° F. to start System Hot Water Return Pump **10**.

**[0126]** For Pump Delay Interlock, Stage **2** of the electronic temperature control **2** switches external incoming 120 Volt Hot Supply from C.

**[0127]** Contact to NO Contact to power external Hot Water Return Pump **10**.

**[0128]** Electronic Temperature Control Sensor **2** reads a low return water temperature of 100° F. or less.

**[0129]** Electronic Temperature Control **2** switches 120 Volt power from C Contact to NO Contact on Stage **1**.

**[0130]** Electronic Temperature Control **2** switches power to start Heating Pump **10** and Solenoid Valve **9**.

**[0131]** Electronic Temperature Control **2** senses high return water temperature of 110° F. or higher.

**[0132]** Electronic Temperature Control **2** disconnects power at Stage **2** at 110° F.

**[0133]** Heating Pump **10** and Solenoid Valve **9** are de-energized and close off flow through the tankless heater.

**[0134]** Electronic Temperature Control **2** senses a high return water temperature of 115° F. or higher.

**[0135]** Electronic Temperature Control **2** de-energizes NO Contact on Stage **2** at 115° F.

**[0136]** Hot Water Return Pump **10** is deactivated.

**[0137]** Hot Water Return Pump Cycle repeats when temperature falls to 105° F.

**[0138]** Heating Cycle of hot water return line repeats when temperature falls to 100° F.

**[0139]** In use, the premium Tankless Water Heater Hot Water Return System **20** of the present invention allows the use of traditional hot water return, pump sizing and piping methodology for tankless water heating applications. The system senses the temperature of recirculated water in the system loop, allowing for operation of the tankless or heat source when system loop falls below a certain set point.

**[0140]** The premium tankless water heater hot water return system of the present invention is fabricated of a pre-piped, enclosed assembly containing:

**[0141]** Solenoid Control Valve **9**;

**[0142]** Piping **15**;

**[0143]** Water pump **10**;

**[0144]** Operator and Hot Water Return Aquastat **2**;

**[0145]** Valves **9**, **11**, **12**;

**[0146]** Fittings.

**[0147]** The components work together accordingly: As the aquastat senses the loop temperature falling, it drives a water pump to allow water to reach and activate the heating source. Once the heat source has satisfied the demand for hot water, the aquastat senses the set point and de-energizes the device. The unit will not allow system loop water to continue through the heating source.

**[0148]** The device may be structured so that the addition or elimination of certain parts may achieve similar results.

**[0149]** The invention may be used in either domestic or commercial application of potable or non potable water, utilizing many heat sources.

**[0150]** An ECONOMY Tankless Water Heater Hot Water Return System allows the use of traditional hot water return, pump sizing and piping methodology for tankless water heating applications. The system senses the temperature of recirculated water in the system loop, allowing for operation of the tankless or heat source when system loop falls below a certain set point.

**[0151]** The ECONOMY tankless water heater hot water return system of the present invention is fabricated of a pre-piped, enclosed assembly containing:

**[0152]** Piping **15**;

**[0153]** Water pump **10**;

**[0154]** Operator and Hot Water Return Aquastat **2**;

**[0155]** Valves **9**, **11**, **12**;

**[0156]** Fittings.

**[0157]** The components work together accordingly: As the aquastat senses the loop temperature falling, it drives a water pump to allow water to reach and activate the heating source. Once the heat source has satisfied the demand for hot water, the aquastat senses the set point and de-energizes the device. The unit will not allow system loop water to continue through the heating source.

**[0158]** The device may be structured so that the addition or elimination of certain parts may achieve similar results.

**[0159]** The invention may be used in either domestic or commercial application of potable or non potable water, utilizing many heat sources.

**[0160]** The invention presented specifically addresses the use of Traditional Hot Water Return Recirculation with Tankless Water Heaters. Its use is not limited to Tankless Hot Water Return as its design lends itself to various heating circulating uses. These uses include, but are not limited to: Solar, Hydro Heating, Combination Heating, Indirect Storage Heaters and various other applications that require heat exchange.

**[0161]** Furthermore, the present invention creates a new method to correctly pipe tankless water heaters with a hot water return system. The present invention may be capable of achieving similar results with the addition or elimination of certain components. Any and all modifications or variations of this method or system should be viewed as within the scope of the presented invention.

**[0162]** It is understood that the preceding description is given merely by way of illustration and not in limitation of the invention and that various modifications may be made thereto without departing from the spirit of the invention as claimed.

What is claimed is:

**1**. A tankless hot water return recirculation system integrated into a tankless hot water distribution heater and pipe array, the system comprising:

a hot water return recirculation system alternately connected to and isolated from a tankless hot water heater having a cold water feed pipe and a hot water distribution pipeline, the hot water return recirculation system comprising a recirculation pipeline connecting between the hot water distribution pipeline and the tankless hot water heater for pumping previously heated warm water from the hot water distribution pipeline back through the recirculation pipeline to the tankless hot water heater for reheating the warm water in the hot water heater to send the reheated water back through the hot water distribution pipeline for use; means for opening and closing a pipeline connection between the hot water distribution pipeline and the water recirculation pipeline; means for opening and closing a pipeline connection between the recirculation system and the tankless hot water heater cooperating with means for opening and closing the return water feed pipeline connection to the tankless hot water heater; an inline water recirculation pump to pump the warm water from the hot water distribution pipeline to the tankless water heater; a temperature sensor in the hot water distribution pipeline; and a two stage electronic temperature control communicating with the temperature sensor, the recirculation pump, and the means for opening and closing the pipeline connections to activate the recirculation pump to activate a flow of warm water from the hot water distribution pipeline to the tankless hot water heater for heating the warm water when the warm water in the hot water distribution pipeline reaches a low set temperature and to deactivate the recirculation pump and switch back the means for opening and closing pipeline connections when the water temperature reaches a set high temperature to isolate the hot water return recirculation system from the tankless hot water heater and the hot water distribution pipeline.

**2**. The system of claim **1** wherein the means for opening and closing the pipeline connection between the hot water distribution pipeline and the water recirculation pipeline comprises a normally closed solenoid valve in the recirculation pipeline which opens to admit heated water from the hot water distribution pipeline into the water recirculation pipeline or closes to bypass the heater.

**3**. The system of claim **2** further comprising a normally partially open recirculation pump valve in the recirculation pipeline for water prime to the recirculation pump and to serve as a secondary by-pass line in the event of the solenoid valve failure.

**4**. The system of claim **1** wherein the hot water pipelines further comprise an outer layer of thermal insulation to minimize radiation heat loss therefrom.

**5**. The system of claim **1** wherein the recirculation pump of the present invention is structured to function in accordance with the tankless water heater requirements, flow rates and hot water heating modulation.

**6**. The system of claim **1** wherein the hot water return recirculation system is configured for whole house hot water recirculation with modulating tankless water heaters.

**7**. The system of claim **1** wherein the hot water return recirculation system protects the tankless water heater from direct recirculation from the hot water distribution pipeline.

**8**. The system of claim **1** wherein the hot water return recirculation system is configured to operate with a continuous hot water return pump.

**9**. The system of claim **1** wherein the hot water return recirculation system is configured to operate with an intermittent hot water return pump.

**10**. The system of claim **1** wherein the hot water return recirculation system is connected to the modulating burner of the tankless water heater for use of the tankless water heater as a hot water return heat source.

**11**. The system of claim **1** further comprising a hot water return check valve located on a lower by-pass pipe of the hot water distribution pipeline to insure that flow can only be directed in one direction, away from the tankless heater and directed toward the hot water return and supply loop.

**12**. The system of claim **1** wherein the hot water return recirculation system is connected to a tankless water heater with traditional hot water return.

**13**. The system of claim **1** wherein the hot water return recirculation system compensates for the head losses of the tankless heater to allow for whole-house and whole-building hot water return.

* * * * *