United States Patent [19]

Mann

[11] **3,785,254**

[45] **Jan. 15, 1974**

[54] **INSULATED CONTAINERS OR THE LIKE**

[76] Inventor: **Robert H. Mann,** 7034 Via Pradera, San Jose, Calif.

[22] Filed: **May 26, 1971**

[21] Appl. No.: **146,931**

[52] **U.S. Cl.**..... **93/36.01,** 93/36 PC, 93/36.6, 93/54, 117/95, 117/104

[51] **Int. Cl.**..... **B31b 49/02**

[58] **Field of Search**..... 229/3.5, 14 BL, 37; 117/95, 105.5, 104 R; 93/36 PC, 36 R, 36.01, 36 MM, 36.6, 54

[56] **References Cited**

UNITED STATES PATENTS

2,955,058	10/1960	Foster	117/105.5
3,091,551	5/1963	Robertson	117/105.5
3,344,973	10/1967	Studen	229/37 R
3,468,468	9/1969	Foote	229/14 BL
732,964	7/1903	Savacool	229/32
902,700	11/1908	Vance	229/30

Primary Examiner—Andrew R. Juhasz
Assistant Examiner—James F. Coan
Attorney—Mellin, Moore & Weissenberger

[57] **ABSTRACT**

A method is disclosed for making an insulated container by spraying a cardboard surface with a resinous foam material having a wet-out time of no greater than about three seconds and a cure time of no greater than about thirty seconds. The cardboard surface may be formed into a container either before or after spraying, with the spraying forming an insulating coating on the internal surfaces of the container.

1 Claim, 3 Drawing Figures

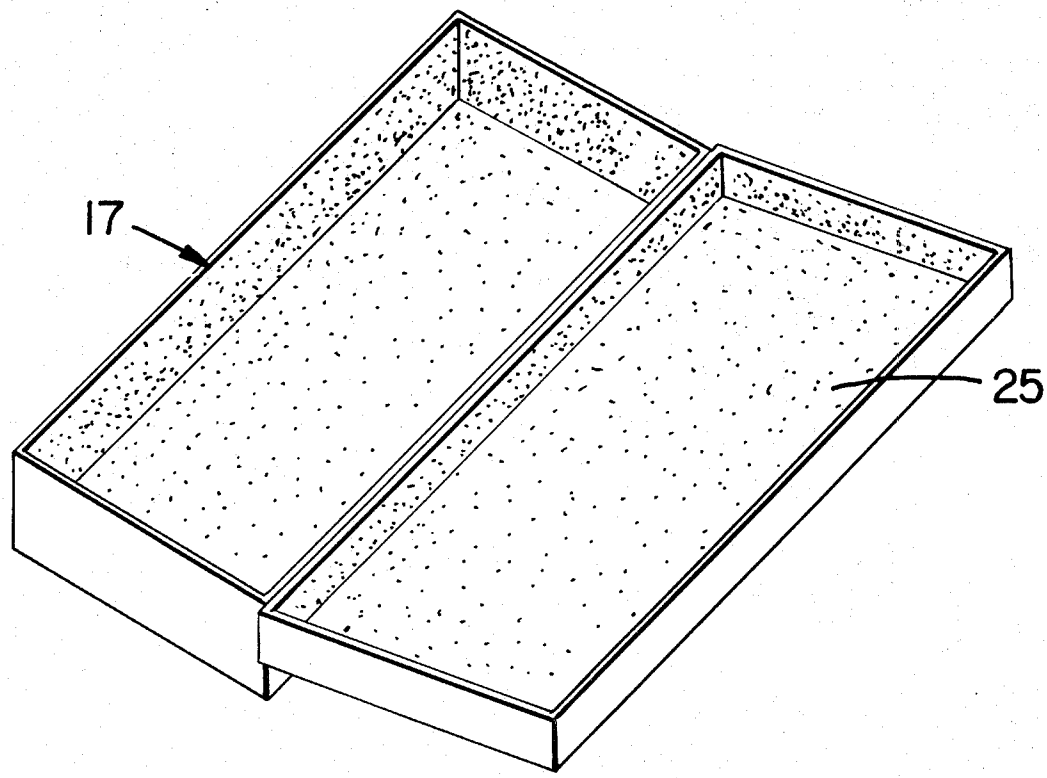

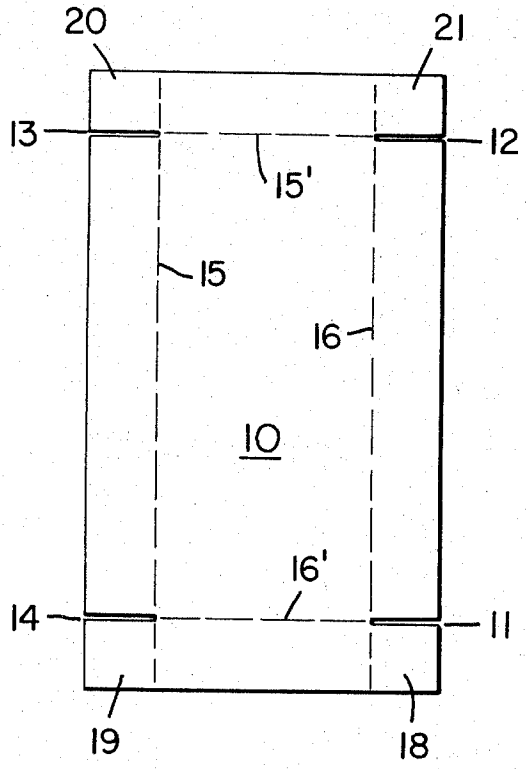

FIG_1

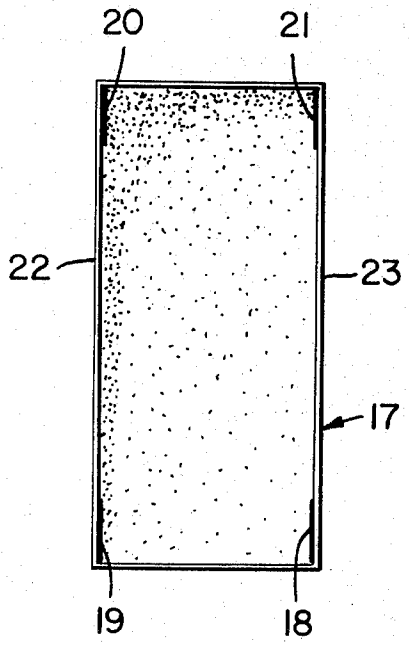

FIG_2

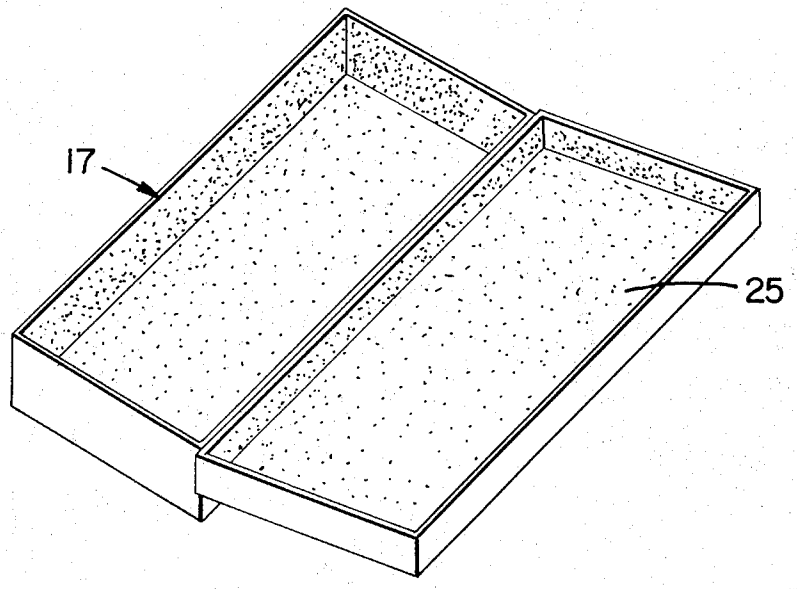

FIG_3

INVENTOR.
ROBERT H. MANN

BY

Mellin, Moore & Weissenberger

ATTORNEY

INSULATED CONTAINERS OR THE LIKE

BACKGROUND OF THE INVENTION

1. Field of the Invention

The invention relates to an insulated container and method of making the same.

2. Description of the Prior Art

Cartons exist which are custom-made for shipping extremely delicate goods. They are usually filled or lined with some type of shock absorbent which is formed to the contour of the article to be transported. The cost of these custom-made boxes, relative to a standard cardboard box, is extremely high.

Standard cardboard boxes are usually cut in blank form and have no padding whatsoever. These boxes are usually used to ship articles which are substantially resistant to mechanical shock and temperature change.

In addition to the standard cardboard boxes, it is also known to use sections of loose resinous foam to pad the sides, top and/or bottom of the standard cardboard box. While this configuration may be useful when the box is nearly full, it has definite disadvantages when the box is relatively empty. This is because the loose resinous foam sections tend to fall away from the sides and the top when there is nothing to hold them in place. The result is that the padding is of essentially no use since it falls away from the sides of the box, thus making the contents vulnerable to the damage which would normally occur in an unpadded box. Furthermore, such loose sections of resinous foam are easily lost after the box has been opened and the contents removed for the first time.

None of the above cartons may be readily used for shipping goods which are delicate but not exceptionally fragile and/or have a need for temperature and moisture insulation.

Thermal insulation is also important to manufacturers of frozen goods who ship their products in cartons. Frozen goods may be temporarily in a warm atmosphere, for example while sitting on docks, and it is necessary that they will not immediately thaw. The containers for such frozen goods, while not extremely fragile, are generally weak enough that they would be injured upon rough handling.

In order to overcome these objections, certain box configurations have been suggested in the prior art. One such arrangement is a lined container disclosed in a U.S. Pat. to Studen, No. 3,344,973. In this container, a resinous foam is cut to the same area dimensions of the pieces of laminated cardboard. This cut foam extends over the inner surfaces of the box including the walls, top and bottom flaps. These foam pieces are cemented to the cardboard box.

However, such a container is not economically feasible because of the material and manufacturing costs involved in cutting and cementing the pieces in place. The resulting container is not waterproof and this feature is very desirable when shipping goods containing moisture, such as cut flowers or the like. By covering all the flaps of the container of Studen, the container will not close properly without leaving large gaps and rounded surfaces on the top and bottom thereof, unless the scores and slots on the blank forming the container are offset, which adds considerably to the manufacturing costs. There thus exists a need for a container for shipping perishables such as fresh-cut flowers, pharmaceuticals, vegetables, meat, fish, whole blood, etc., in

an economical manner whereby the goods shipped are protected against both heat and cold and no leakage of the container results.

It is an object of this invention to provide an insulated container for shipping perishables in an economical manner while preventing leakage thereof and protecting the contents of such containers from heat or cold.

It is a further object of this invention to provide such containers using conventional corrugated cardboard.

It is still another object of my invention to provide an insulated container which may be produced in relatively high quantities in a short period of time at a relatively low cost.

These and other objects are preferably accomplished by spraying a cardboard surface with a resinous foam material having a wet-out time of no greater than about three seconds and a cure time of no greater than about thirty seconds. The cardboard surface can be formed into a container either before or after spraying, with the spraying forming an insulating coating on the internal surfaces of the container.

BRIEF DESCRIPTION OF THE DRAWINGS

FIG. **1** is a plan view of a flat sheet of cardboard in unfolded form for carrying out my invention;

FIG. **2** is a top plan view of one-half of a container formed from the sheet of cardboard of FIG. **1**;

FIG. **3** is a perspective view of a completed container formed using the teaching of my invention.

DESCRIPTION OF THE PREFERRED EMBODIMENT

Referring now to FIG. **1** of the drawings, a box or container blank **10** is shown having cutout areas **11, 12, 13** and **14.** These areas **11** through **14** permit blank **10** to be folded along score lines **15, 15', 16** and **16'** to form one-half of a box or container **17** as shown in FIG. **2.** Flaps **18** through **21** (see also FIG. **1**) are folded inwardly and stapled or otherwise secured to sides **22** and **23** (FIG. **2**) to form container **17.** Such formation is of course well known in the art and forms no part of my invention. Also, blank **10** may be of any suitable configuration and include more cut-out areas and score lines to form various sizes and types of boxes, including those which have an integral top or selectively closed portion. However, the material comprising blank **10** is of cardboard and preferably a composite material such as corrugated cardboard. Finally, although my invention will be described hereinbelow with respect to the blank of FIG. **1** and the container of FIG. **2,** obviously such concepts can be applied to any cardboard blank or already existing container with such container being formed from the blank either before or after treatment in accordance with my invention.

Thus, referring once again to blank **10** of FIG. **1,** an insulated container is made in accordance with my invention by spraying at least one surface of blank **10** with a resinous foam material. The resinous foam material must have a wet-out time of from one to three seconds, i.e., preferably no greater than about three seconds. Such a wet-out time permits the sprayed resinous foam material to quickly spread over the entire surface of blank **10** and subsequently react with the substrate of blank **10** (i.e., quickly bond to the surface of cardboard blank **10**). In addition to such reaction with the surface of blank **10,** the resinous foam material must have a subsequent cure time of no greater than about

thirty seconds. Such cure time is desired to have the resinous foam material be tack-free within 30 seconds and thus be manipulatable during the manufacturing process. Thus, the resinous foam material must spread out and wet all of the surface of blank **10** it is desired to coat before reacting with the substrate thereof so that a "skin" is formed adjacent the surface, which "skin" is necessary in order to provide desired waterproof characteristics to the treated blank **10.** Preferably, the sprayed coating should have an average thickness of from about three-eighths to one-half inch.

Although any suitable resinous foam material may be used, such material, in addition to the characteristics set forth hereinabove, preferably should have a high yield, i.e., it should be of low density, for example, about 1.75 pounds per cubic foot, so that it covers a greater area and thus would be both economical to use and lightweight, in addition to its inherent insulating qualities. One such resinous foam material would be the polyurethane foam resin material manufactured by the Sealgit Division of the Flintkote Corporation of New York, N. Y. under the trade name 2015, a fluorocarbon blown, non-burning, room temperature curing system formulated for inplant, high yield applications by spray methods. This material is considered a rigid formulation and is particularly suited for use with containers that are already set up, as in FIG. **2.** Such a rigid formulation gives more insulation and better waterproofing than so-called semi-rigid or semi-flexible formulations which of course can also be used.

For example, for items that require moisture inside of the container, such as fresh-cut roses or fresh fish, the container of FIG. **2** is first set up from the blank **10** of FIG. **1** and stitched or stapled as indicated, then all of the internal surfaces are sprayed with a rigid resinous foam material, such as System 2015. The formulation of this material first "wets out" to bond well to the corrugated board and at the same time forms a skin so as to be watertight. Since roses or fresh fish are packed in ice and shipped by air, water leakage is a problem.

For other perishables that require less insulation and no ice, such as carnations, a different formulation of resinous foam material may be used that is faster to produce and lower in cost than a rigid resinous foam material. Such a foam is the so-called semi-rigid or semi-flexible resinous foam material referred to hereinabove. This latter foam may be sprayed or extruded onto the flat scored and slotted blank **10** of FIG. **1.** When a container such as container **17** of FIG. **2** is required, the treated blank may be folded and stapled as indicated and the container is ready to pack. Of course, this latter treatment saves on shipping and storage costs.

One such semi-rigid or semi-flexible resinous foam material be the polyurethane foam resin material manufactured by the Cook Paint & Varnish Co., of Milpitas, Calif., under the trade name "System 627". This material may be modified to give a fast inrise time — i.e., the time for the chemical reaction to begin and the material to rise to its desired height — and a 30 second or less tack free time. The density of this material is about from 0.5 to 0.55 pounds per cubic foot.

Referring now to FIG. **3,** a top **25** for the container **17** of FIG. **2** may be formed in the manner indicated, with the sides thereof being of a lesser width than the sides of the bottom container **17.** Top **25** thus partially telescopes down over bottom container **17.** A completed container is then formed having a selectively closable top resulting in the entire interior thereof being insulated after treatment in accordance with my invention.

In all of the foregoing treatments of the blank **10,** container **17** and top **25,** if desired, both sides (i.e., the outside of the container) may be treated in the manner indicated to provide even more insulation waterproofing, etc. Also, the resinous foam materials discussed hereinabove may be placed on the surfaces indicated by any convenient technique, the term "spraying" broadly including extrusion or any streamlike application of material under pressure. I prefer spraying since it is a quick and easy method and any well-known technique may be used, such as the method disclosed in a U. S. Pat. to Foster, No. 2,955,058.

It can be seen from the above discussion that the technique of my invention enables the production of insulated containers in extremely high quantities in a relatively short time at low cost. An integral package unit can be manufactured which will keep water in or out, depending on the goods to be shipped. The coating material may be applied quickly and conveniently in any desired thickness, depending on the amount of insulation required for the product to be shipped. The techniques disclosed hereinabove result in an insulated container which gives superior protection over existing containers from heat or freezing damage and from crushed containers. Such containers are greater in strength than known containers, at a lower cost and can take printing or the like thereon in addition to waterproofing the interior thereof.

I claim as my invention:

1. A method of making an insulated container from a generally flat rectangular cardboard blank comprising the steps of:

folding opposite sides and ends of said blank upwardly in a manner forming a box having a generally flat bottom portion and upstanding sides integral with the periphery of said bottom portion;

and spraying all of the internal surfaces of said box with a polyurethane resinous foam having a wet-out time of no greater than from about 1 to 3 seconds and a cure time of no greater than about 30 seconds until a continuous coating of said material having a density of about 1.75 pounds per cubic foot and an average thickness of from about three-eighth to one-half inch on all of said internal surfaces is formed.

* * * * *